THE RISING POWER OF QUALITY

SMOXH®
CUTTING TOOLS

7200 product

2026-v2
General Product **Catalogue**

www.**smoxh**.com.tr

TURNING | MILLING | DRILLING | GROOVING | SLOT | BORING

About Us

Corporate Strength and Vision
Our journey, which began in 2004 under the leadership of our founder, Mustafa ŞİMŞEK, in a 50 m² area, continues today in our modern 15,000 m² facilities as one of the leading brands in the cutting tool industry. At SMOXH Cutting Tools, we have adopted continuous R&D and technological investment as our core philosophy since the day we were founded. This commitment has positioned us as a preferred solution partner in both national and international markets.

Technological Capacity and Product Diversity
With our team of engineers and 120 experienced personnel, we manufacture over 7,000 different products, primarily focusing on cutting insert clamping equipment for CNC lathes and milling machines. With this high production capacity and wide product range, SMOXH offers fast and precise solutions even for the most complex demands in the sector.

Global Success and Competitive Advantage
The foundation of SMOXH's globally recognized brand status lies in our strategy to achieve the highest level in cost and quality. Thanks to this competitive advantage, 60% of our production reaches end-users all over the world, especially in the European market. We have also secured a significant share of the Turkish market, generating strong demand. Through strategic investments, SMOXH has become not just a follower, but a trendsetter in the industry, both in Turkey and globally.

Investing in the Future: SMOXH Academy
We are aware that success is not solely about production. Through our investments in education and contributions to social responsibility projects, we support the development of a qualified workforce for the future. The SMOXH Academy, established within this scope, makes a significant contribution to raising new generations who will add value to our sector and our country.

Success Through Collaboration: The "WE" Philosophy
At SMOXH Cutting Tools, we believe that the key to success is the "WE" rather than the "I" philosophy. On this occasion, we sincerely thank all our dealers, our valued customers, and most importantly, our colleagues who walk this path with us, for their contributions to this great success.

SMOXH Cutting Tools

Hakkımızda

Kurumsal Güç ve Vizyon
2004 yılında kurucumuz Mustafa ŞİMŞEK liderliğinde, 50 m²'lik bir alanda başlayan yolculuğumuz, bugün kesici takım sektörünün öncü markalarından biri olarak 15.000 m²'lik modern tesislerimizde devam etmektedir. SMOXH Kesici Takımlar olarak, kurulduğumuz ilk günden itibaren sürekli AR-GE ve teknolojik yatırımı temel felsefemiz haline getirdik. Bu kararlılık, bizi hem ulusal hem de uluslararası pazarda tercih edilen bir çözüm ortağı konumuna taşımıştır.

Teknolojik Kapasite ve Ürün Çeşitliliği
Mühendis kadromuz ve alanında tecrübeli 120 personelimizle, CNC torna ve frezeler için kesici uç bağlama ekipmanları başta olmak üzere, 7.000'i aşkın ürün çeşidiyle üretim yapmaktayız. SMOXH, ulaştığı bu yüksek üretim kapasitesi ve geniş ürün yelpazesi ile sektörün en karmaşık taleplerine dahi hızlı ve hassas çözümler sunmaktadır.

Küresel Başarı ve Rekabet Avantajı
SMOXH'un küresel çapta tanınan bir marka olmasının temelinde, maliyet ve kalitede en üst seviyeyi yakalama stratejimiz yatmaktadır. Bu rekabet avantajı sayesinde, üretimimizin %60'lık kısmını başta Avrupa pazarı olmak üzere dünyanın dört bir yanındaki son kullanıcılarla buluşturmaktayız. Türkiye pazarında da sektörün önemli bir payını alarak güçlü bir talep oluşturmuş durumdayız. SMOXH, yaptığı stratejik yatırımlarla sektörün sadece takipçisi değil, aynı zamanda yön vereni haline gelmiştir.

Geleceğe Yatırım: SMOXH Akademi
Başarının sadece üretimden ibaret olmadığının bilincindeyiz. Eğitime yaptığımız yatırımlar ve sosyal sorumluluk projelerine katkımızla, geleceğin nitelikli iş gücünü destekliyoruz. Bu kapsamda kurulan SMOXH Akademi, sektörümüze ve ülkemize değer katacak yeni nesillerin yetişmesine önemli bir katkı sunmaktadır.

Birlikte Başarı: "BİZ" Felsefesi
SMOXH Kesici Takımlar olarak, başarının anahtarının "ben" değil, "BİZ" anlayışından geçtiğine inanıyoruz. Bu büyük başarıda emeği geçen tüm bayilerimize, değerli müşterilerimize ve en önemlisi bu yolda bizimle yürüyen tüm çalışma arkadaşlarımıza yürekten teşekkür ederiz.

SMOXH Kesici Takımlar

Chairman's Message

Mustafa ŞİMŞEK
Chairman of the Board,
SMOXH Cutting Tools

Dear Valued Business Partners,

This new catalog we are sharing with you is more than just a product list to us; it is a reflection of our shared future that we have built together, nurtured with hard work, and strengthened day by day. It gives me immense joy to see how the dreams we envisioned back in 2004, in that small 50-square-meter workshop, have transformed into a grand reality today through your trust.

We understand very well the challenges you face on the production floor, the effort you put in, and the pride of finishing a precision job without error. Because we, too, have reached this point by sweating over the same workbenches with that very same excitement. That is why we work tirelessly to make your job easier and to increase your productivity.

In this new period, we have listened closely to your requests and the needs of the industry. Working day and night with our R&D team, we have added more than 1,000 new products to this catalog. With our product range now exceeding 7,000 types, we are here to be your closest solution partner in your most demanding projects, just as we have always been.

If SMOXH reaches every corner of the world today, the greatest share of this success belongs to your belief in us. For us, the greatest gain is your satisfaction and the unbreakable bridges of friendship we have built together. I hope our new products bring abundance to your workshops and ease to your work. I want you to know that we are always by your side.

With my warmest regards and sincere respect,

Yöneticinin Mesajı

Mustafa ŞİMŞEK
Yönetim Kurulu Başkanı
SMOXH Kesici Takımlar

Değerli Yol Arkadaşlarım ve Kıymetli İş Ortaklarım,

Sizlerle paylaştığımız bu yeni katalog, bizim için sadece bir ürün listesi değil; birlikte büyüttüğümüz, emek verdiğimiz ve her geçen gün daha da güçlendirdiğimiz ortak geleceğimizin bir yansımasıdır. 2004 yılında 50 metrekarelik o küçük atölyede yola çıkarken kurduğumuz hayallerin, bugün sizlerin güveniyle nasıl dev bir gerçeğe dönüştüğünü görmek bana büyük bir mutluluk veriyor.

Biz, sizin üretim sahasında yaşadığınız zorlukları, verdiğiniz emeği ve o en hassas işi hatasız bitirmenin gururunu çok iyi biliyoruz. Çünkü biz de aynı heyecanla, aynı tezgahların başında ter dökerek bugünlere geldik. İşte bu yüzden, işinizi kolaylaştırmak ve verimliliğinizi artırmak için durmadan çalışıyoruz.

Bu yeni dönemde, sizlerden gelen talepleri ve sektörün ihtiyaçlarını can kulağıyla dinledik. AR-GE ekibimizle gece gündüz demeden çalışarak, bu kataloğumuza 1000'den fazla yeni ürün ekledik. Toplamda 7.000'i aşan ürün çeşidimizle, her zaman olduğu gibi bugün de en zorlu projelerinizde en yakın çözüm ortağınız olmak için buradayız.

SMOXH bugün dünyanın dört bir yanına ulaşıyorsa, bu başarıda en büyük pay sizlerin bize olan inancıdır. Bizim için en büyük kazanç, sizlerin memnuniyeti ve kurduğumuz bu sarsılmaz dostluk köprüleridir. Yeni ürünlerimizin tezgahlarınıza bereket, işlerinize kolaylık getirmesini diliyorum. Her zaman yanınızda olduğumuzu bilmenizi isterim.

Gönül dolusu selam ve sevgilerimle,

SMOXH®
CUTTING TOOLS

the best
value of
process

RISING POWER OF QUALTY RISING POWER OF QUALTY RISING POWER OF QUALTY RISING POWER OF QUALTY RISING POWER OF QUALTY RISING POWER OF QUALTY RISING POWER OF QUALTY
ER OF QUALTY RISING POWER OF QUALTY RISING POWER OF QUALTY RISING POWER OF QUALTY RISING POWER OF QUALTY RISING POWER OF QUALTY RISING POWER OF QUALTY RISIN

SMOXH®
CUTTING TOOLS
The Rising Power of Quality

INDEX

14	T Systems External Tools	A
28	P Systems External Tools	
38	M Systems External Tools	
40	C Systems External Tools	
44	S Systems External Tools	

98	Anti-Vibration Tools	B
98	T Systems Internal Tools	
104	P Systems Internal Tools	
110	M-C Systems Internal Tools	
120	S Systems Internal Tools	

155	BladeTools	C
161	External Grooving Tools	
178	Swiss Type Grooving Tools	
184	Face Grooving Tools	

194	Internal Grooving Tools	D

207	Extrenal Threading Tools	E
211	Intrenal Threading Tools	

248	90 Milling Tools	F
348	45 Milling Tools	

373	Copy Milling Tools	G
386	Ball Nose End Mills	

398	High Feed Milling Tools	H

454	T Slot Mills	I
449	Disc Mills	
457	Chamfering Tools	
461	Dove Mills	
392	Adjustable Boring Bars	

480	U-Drills	J
519	MultiCut	

Rising Power of Quality

External Turning Tools

A

- **T System** External Turning Tools
- **P System** External Turning Tools
- **M System** External Turning Tools
- **S System** External Turning Tools
- **C System** External Turning Tools

Dışçap Tornalama Takım Tutucu kodlamaları / External tool Holder Code System(ISO)

1	2	3	4	5	6	7	8	9
T	D	J	N	R	25	25	M	15
Elmas Sıkma sistemi Clamping system of insert	Elmas şekli Shape of insert	Tutucu Tipi Holder Style	Elmas boşaltma açısı Clearance Angle of Insert	Takım Yönü Hand of Tool	Şaft Yüksekliği Height of Shank	Şaft Genişliği Width of Shank	Takım Boyu Length of tool	Elmas kesme uzunluğu Length of Insert Cutting Edge

1 Elmas Sıkma Sistemleri / Clamping Method of Insert

T D J N R 25 25 M15

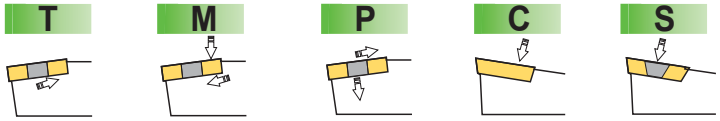

Üst ve delikten sıkmalı sistem Top and hole clamping | Pimli ve delikten sıkmalı sistem Pin and hole clamping | Levyeli sistem Lever system clamping | Deliksiz Üstten sıkmalı Top clamping system without hole | Vidalı sıktırma Screw system

2 Elmas Şekli / Insert Shape

T D J N R 25 25 M15

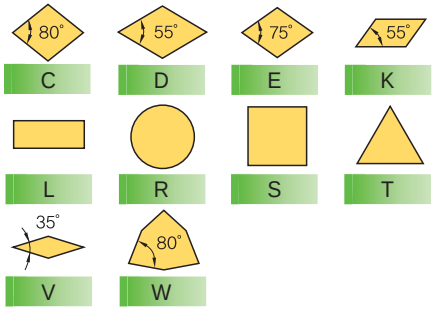

3 Tutucu Tipi / Holder Style

T D J N R 25 25 M15

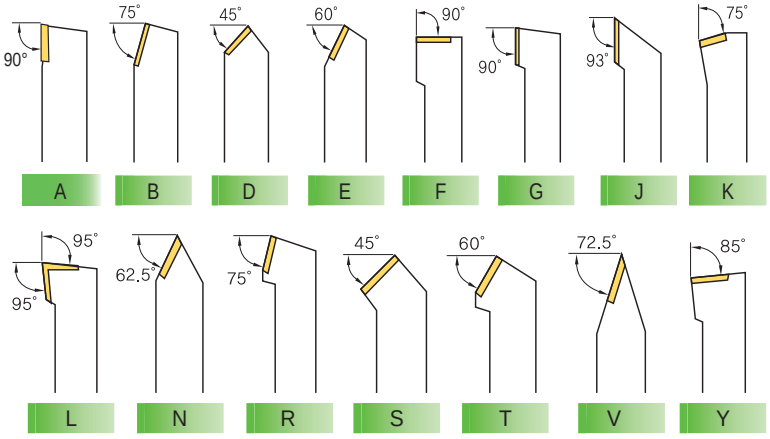

4 Clearance Angle of Insert

T D J N R 25 25 M15

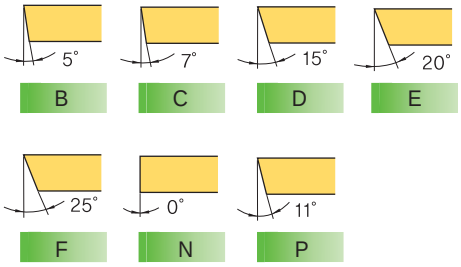

5 Takım Yönü / Hand of Tool

T D J N R 25 25 M15

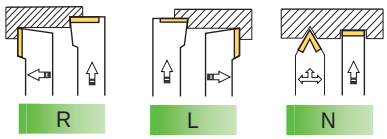

6 Şaft Yüksekliği / Height of Shank

T D J N R 25 25 M15

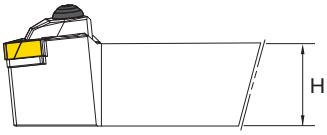

7 Şaft Genişliği / Height of Shank

T D J N R 25 25 M15

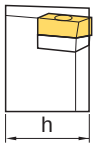

8 Takım Boyu / Length of Holder

T D J N R 25 25 M15

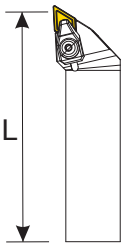

A - 32	H - 100	Q - 180
B - 40	J - 110	R - 200
C - 50	K - 125	S - 250
D - 60	L - 140	T - 300
E - 70	M - 150	U - 350
F - 80	N - 160	V - 400
G - 90	P - 170	W - 450

9 Elmas Kesme Uzunluğu / Length of Insert Cutting Edge

T D J N R 25 25 M15

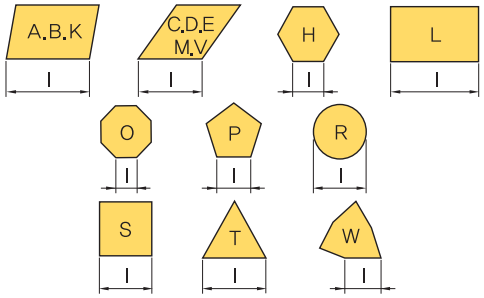

Insert			DNM. 1104.. ISO	DNM. 1504.. ISO	DNM. 1506.. ISO	DNM. 1504.. ISO	DNM. 1506.. ISO	DNM. 1104.. ISO
Size (mm)			#1616 - 2525	#2020 - 3232	#2020 - 4040	#2525 - 3232	#2020 - 3232	#1616 - 2525
ISO Code			TDJN R/L	TDJN R/L	TDJN R/L PDJN R/L	TDHN R/L	TDHN R/L	TDNNN
Cutting Angle			93°	93°	93°	107.5°	107.5°	62.5mm
Clamping Type	**T System**	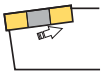	✓ Size Range (mm) #1616 - 2525	✓ Dia Range (mm) #2020 - 3232	✓ Dia Range (mm) #2020 -5050	✓ Dia Range (mm) #2525 - 3232	✓ Dia Range (mm) #2020 - 3232	✓ Dia Range (mm) #1616 - 2525
	Page		**A14**	**A14**	**A14**	**A15**	**A15**	**A15**
	P System	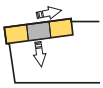	-	-	✓ Dia Range (mm) #2020 - 4040	-	-	-
	Page				**A28**			
	M System	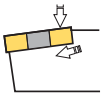	-	-		-	-	-
	Page							
	C System	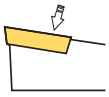	-	-	-	-	-	-
	Page							
	S System	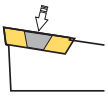						
	Page							

Insert			DNM. 1504.. ISO	DNM. 1506.. ISO	CNM. 0903.. ISO	CNM. 1204.. ISO	CNM. 1606.. ISO	CNM. 1909.. ISO
Size (mm)			#2020 - 3232	#2020 - 4040	#2525	#2020 - 4040	#2525 - 5050	#2525 - 5050
ISO Code			TDNNN	TDNNN PDNNN	TCLN R/L	TCLN R/L PCLN R/L	TCLN R/L PCLN R/L	TCLN R/L PCLN R/L
Cutting Angle			62.5°	62.5°	95°	95°	95°	95°
Clamping Type	**T System**	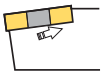	✓ Size Range (mm) #1616 - 2525	✓ Dia Range (mm) #2020 - 4040	✓ Dia Range (mm) #2525	✓ Dia Range (mm) #2020 - 4040	✓ Dia Range (mm) #2525 -5050	✓ Dia Range (mm) #2525 - 5050
	Page		**A16**	**A16**	**A17**	**A17**	**A17**	**A17**
	P System	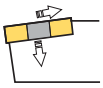	-	✓ Dia Range (mm) #2020 - 4040	-	✓ Dia Range (mm) #2020 - 3232	✓ Dia Range (mm) #2525 - 4040	✓ Dia Range (mm) #3232 - 4040
	Page			**A29**		**A30**	**A30**	**A30**
	M System	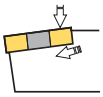	-	-	-	-	-	-
	Page							
	C System	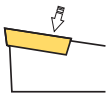	-	-	-	-	-	-
	Page							
	S System	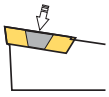						
	Page							

Insert			CNM. 1204.. ISO	CNM. 1606.. ISO	CNM. 1204.. ISO	CNM. 1606.. ISO	CNM. 1204.. ISO	CNM. 1606.. ISO
Size (mm)			#2020 - 2525	#2525 - 3232	#2020 - 2525	#2525 - 3232	#2020 - 3232	#2525 - 3232
ISO Code			TCRN R/L	TCRN R/L	TCKN R/L	TCKN R/L	TCBN R/L PCBN R/L	TCBN R/L PCBN R/L
Cutting Angle			75°	75°	75°	75°	75°	75°
Clamping Type	**T System**	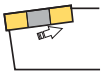	✓ Size Range (mm) #2020 - 2525	✓ Dia Range (mm) #2525 - 3232	✓ Size Range (mm) #2020 - 2525	✓ Dia Range (mm) #2525 - 3232	✓ Size Range (mm) #2525	✓ Dia Range (mm) #2525
	Page		**A18**	**A18**	**A19**	**A19**	**A18**	**A18**
	P System	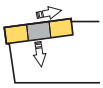	-	-			✓ Dia Range (mm) #2020 - 3232	✓ Dia Range (mm) #2525 - 3232
	Page						**A31**	**A31**
	M System	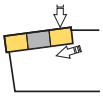	-	-	-	-	-	-
	Page							
	C System	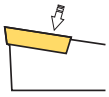	-	-	-	-	-	-
	Page							
	S System	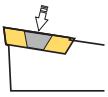						
	Page							

Insert			CNM. 1909.. ISO	CNM. 1204.. ISO	CNM. 1606.. ISO	CNM. 1909.. ISO	CNM. 1204.. ISO	CNM. 1606.. ISO	CNM. 1909.. ISO
Size (mm)			#3232 - 4040	#1616 - 3232	#2525 - 4040	#3232 - 4040	#2020 - 3232	#2525 - 4040	#3232 - 4040
ISO Code			TCBN R/L PCBN R/L	TCMNN PCMNN	TCMNN PCMNN	TCMNN PCMNN	TCZNN	TCZNN	TCZNN
Cutting Angle			75°	50°	50°	50°	40°	40°	40°
Clamping Type	**T System**	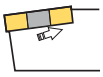	✓ Size Range (mm) #2525 - 3232	✓ Size Range (mm) #1616 - 3232	✓ Size Range (mm) #2525 - 4040	✓ Size Range (mm) #3232 - 4040	✓ Size Range (mm) #2020 - 3232	✓ Size Range (mm) #2525 - 4040	✓ Size Range (mm) #3232 - 4040
	Page		**A18**	**A20**	**A20**	**A20**	**A20**	**A20**	**A20**
	P System	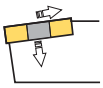	✓ Size Range (mm) #3232 - 4040	✓ Size Range (mm) #2020 - 3232	✓ Size Range (mm) #2525 - 3232	✓ Size Range (mm) #3232 - 4040	-	-	-
	Page		**A31**	**A32**	**A32**	**A32**			
	M System	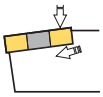	-	-	-	-	-	-	-
	Page								
	C System	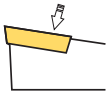	-	-	-	-	-	-	-
	Page								
	S System	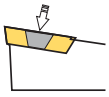							-
	Page								

Insert			SNM. 1204.. ISO	SNM. 1506.. ISO	SNM. 1906.. ISO	SNM. 1204.. ISO	SNM. 1506.. ISO	SNM. 1906.. ISO
Size (mm)			#2020 - 3232	#2525 - 4040	#3232 - 4040	#2020 - 3232	#2525 - 3232	#3232 - 4040
ISO Code			TSSN R/L PSSN R/L	TSSN R/L PSSN R/L	TSSN R/L PSSN R/L	TSKN R/L PSKN R/L	TSKN R/L PSKN R/L	PSKNR
Cutting Angle			45°	45°	45°	75°	75°	75°
Clamping Type	**T System**	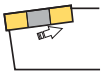	✓ Size Range (mm) #2020 - 3232	✓ Size Range (mm) #2525 - 5050	✓ Size Range (mm) #3232 - 5050	✓ Size Range (mm) #2020 - 3232	✓ Size Range (mm) #2525 - 3232	-
	Page		**A21**	**A21**	**A21**	**A21**	**A21**	-
	P System	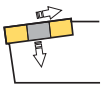	✓ Size Range (mm) #2020 - 3232	✓ Size Range (mm) #2525 - 3232	✓ Size Range (mm) #3232 - 4040	✓ Size Range (mm) #2020 - 3232	✓ Size Range (mm) #2525 - 3232	✓ Size Range (mm) #3232 - 4040
	Page		**A34**	**A34**	**A34**	**A34**	**A34**	**A34**
	M System	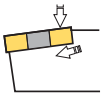	-	-	-	-	-	-
	Page							
	C System	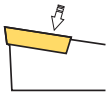	-	-	-	-	-	-
	Page							
	S System	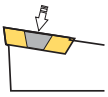	-	-	-	-	-	-
	Page							

Insert			SNM. 1204.. ISO	SNM. 1506.. ISO	SNM. 1906.. ISO	VNM. 1604.. ISO	VNM. 1604.. ISO	VNM. 1604.. ISO
Size (mm)			#2020 - 3232	#2525 - 4040	#3232 - 4040	#2020 - 4040	#2020 - 3232	#2020 - 4040
ISO Code			TSDNN PSDNN	TSDNN PSDNN	PSDNN	TVJN R/L	TVHN R/L	TVVNN
Cutting Angle			45°	45°	45°	93°	107.5°	72.5°
Clamping Type	**T System**	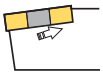	✓ Size Range (mm) #2020 - 3232	✓ Size Range (mm) #2525 - 4040	-	✓ Size Range (mm) #2020 - 4040	Size Range (mm) #2020 - 3232	✓ Size Range (mm) #2020 - 4040
	Page		**A22**	**A22**	**-**	**A23**	**A23**	**A24**
	P System	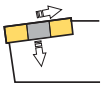	✓ Size Range (mm) #2020 - 3232	✓ Size Range (mm) #2525 - 3232	✓ Size Range (mm) #3232 - 4040	-	-	-
	Page		**A35**	**A35**	**A35**	-	-	-
	M System	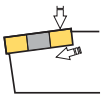	-	-	-	-	-	-
	Page							
	C System	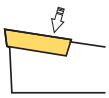	-	-	-	-	-	-
	Page							
	S System	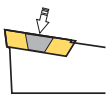	-	-	-	-	-	-
	Page							

Insert			WNM. 0604.. ISO	WNM. 0804.. ISO	WNM. 0604.. ISO	WNM. 0804.. ISO	TNM. 1604.. ISO	TNM. 1604.. ISO
Size (mm)			#1616 - 2525	#2020 - 5050	#1616 - 2525	#2020 - 4040	#2020 - 3232	#2020 - 3232
ISO Code			TWLN R/L MWLN R/L	TWLN R/L PWLN R/L MWLN R/L	MWDNN	MWDNN	TTJN R/L MTJN R/L	TTGN R/L
Cutting Angle			95°	95°	50°	50°	93°	90°
Clamping Type	**T System**	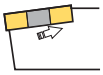	✓ Size Range (mm) #1616 - 2525	✓ Size Range (mm) #2020 - 5050	-	-	✓ Size Range (mm) #2020 - 3232	✓ Size Range (mm) #2020 - 3232
	Page		**A27**	**A27**			**A25**	**A25**
	P System	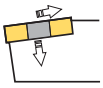	-	✓ Size Range (mm) #2020 - 4040	-	-	-	
	Page			**A33**				
	M System	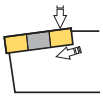	✓ Size Range (mm) #1616 - 2525	✓ Size Range (mm) #2020 - 5050	✓ Size Range (mm) #1616 - 2525	✓ Size Range (mm) #2020 - 4040	✓ Size Range (mm) #2020 - 3232	-
	Page		**A38**	**A38**	**A38**	**A38**	**A38**	
	C System	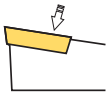	-	-	-	-	-	-
	Page							
	S System	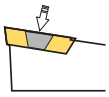	-	-	-	-	-	-
	Page							

Insert			TNM. 1604.. ISO	TNM. 1604.. ISO	TNM. 2204.. ISO	TNM. 2204.. ISO	TNM. 2204.. ISO	TNM. 2204.. ISO
Size (mm)			#2020 - 3232	#2020 - 3232	#2525 - 4040	#2525 - 4040	#2525 - 4040	#2525 - 4040
ISO Code			TTFN R/L	TTENN MTENN	TTJN R/L MTJN R/L PTJN R/L	TTGN R/L PTGN R/L	TTFN R/L PTFN R/L	TTENN MTENN PTTN R/L
Cutting Angle			95°	60°	93°	90°	90°	60°
Clamping Type	**T System**	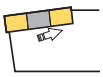	✓ Size Range (mm) #2020 - 3232	✓ Size Range (mm) #2020 - 3232	✓ Size Range (mm) #2525 - 5050	✓ Size Range (mm) #2525 - 4040	✓ Size Range (mm) #2525 - 4040	✓ Size Range (mm) #2525 - 4040
	Page		**A26**	**A26**	**A25**	**A25**	**A26**	**A26**
	P System	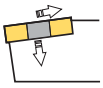	-	-	✓ Size Range (mm) #2525 - 3232	✓ Size Range (mm) #2525 - 3232	✓ Size Range (mm) #2525 - 3232	✓ Size Range (mm) #2525 - 3232
	Page				**A36**	**A37**		**A37**
	M System	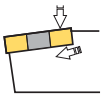	-	✓ Size Range (mm) #2020 - 3232	✓ Size Range (mm) #2020 - 5050	-	-	✓ Size Range (mm) #2525 - 4040
	Page			**A38**	**A38**			**A38**
	C System	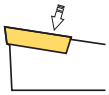	-	-	-	-	-	-
	Page							
	S System	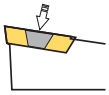	-	-	-	-	-	-
	Page							

Insert			DN.N. 1507.. ISO	CN.N 1207.. ISO	SN.N 1207.. ISO	SN.N 1207.. ISO	SN.N 1207.. ISO	TN.N 1607.. ISO
Size (mm)			#2525 - 3232	#2525 - 3232	#2525 - 3232	#2525 - 3232	#2525 - 3232	#2525 - 3232
ISO Code			CDJN R/L	CCLN R/L	CSSN R/L	CSKN R/L	CSDNN	CTJN R/L
Cutting Angle			93°	50°	45°	75°	45°	93°
Clamping Type	**T System**	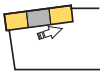	-	-		-	-	-
	Page							
	P System	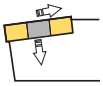	-	-	-	-	-	-
	Page							
	M System	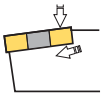	-	-	-	-	-	-
	Page							
	C System	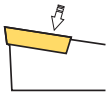	✓ Size Range (mm) #2525 - 3232	✓ Size Range (mm) #2525 - 3232	✓ Size Range (mm) #2525 - 3232	✓ Size Range (mm) #2525 - 3232	✓ Size Range (mm) #2525 - 3232	✓ Size Range (mm) #2525 - 3232
	Page		**A40**	**A40**	**A41**	**A41**	**A41**	**A43**
	S System	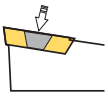	-	-		-	-	-
	Page							

Insert			RCGX 0606.. ISO	RCGX 0904.. ISO	RCGX 1207.. ISO	KNUX R/L ISO		
Size (mm)			#2020 - 3232	#2020 - 3232	#2525 - 3232	#2020 - 4040		
ISO Code			CRDCN	CRDCN	CRDCN	CKJN R/L		
Cutting Angle			-	-	-	93°		
Clamping Type	**T System**	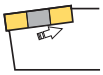	-	-	-			
	Page			-	-			
	P System	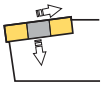	-	-	-			
	Page			-	-			
	M System	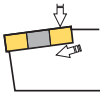	-	-	-			
	Page			-	-			
	C System	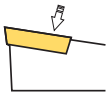	✓ Size Range (mm) #2020 - 3232	✓ Size Range (mm) #2020 - 4040	✓ Size Range (mm) #2525 - 4040	✓ Size Range (mm) #2020 - 4040		
	Page		**A42**	**A42**	**A42**	**A43**		
	S System	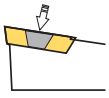	-					
	Page							

Insert			DCM. 0702.. ISO	DCM. 11T3.. ISO	DCM. 0702.. ISO	DCM. 11T3.. ISO	DCM. 0702.. ISO	DCM. 11T3.. ISO
Size (mm)			#0808 - 1616	#1212 - 3232	#0808 - 1616	#1616 - 3232	#1010 - 1616	#1212 - 1616
ISO Code			SDJC R/L	SDJC R/L	SDHC R/L	SDHC R/L	SDAC R/L	SDHC R/L
Cutting Angle			93°	93°	107.5°	107.5°	90°	107.5°
Clamping Type	**T System**	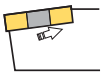	-	-	-	-	-	-
	Page							
	P System	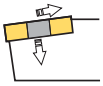	-	-	-	-	-	-
	Page							
	M System	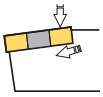	-	-	-	-	-	-
	Page							
	S System	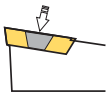	✓ Size Range (mm) #0808 - 1616	✓ Size Range (mm) #1212 - 3232	✓ Size Range (mm) #0808 - 1616	✓ Size Range (mm) #1616 - 3232	-	-
	Page		**A44**	**A44**	**A46**	**A46**		
	S System Swiss (K.O)	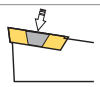	✓ Size Range (mm) #1010 - 2020	✓ Size Range (mm) #1212 - 2020	-	-	✓ Size Range (mm) #1010 - 1616	✓ Size Range (mm) #1212 - 1616
	Page		**A65**	**A65**			**A66**	**A66**

Insert			DCM. 0702.. ISO	DCM. 11T3.. ISO	VBM. 1103.. ISO	VBM. 1604.. ISO	VBM. 1103.. ISO	VBM. 1604.. ISO
Size (mm)			#0808 - 1616	#1212 - 3232	#1212 - 2525	#1616 - 3232	#1616 - 2525	#1616 - 3232
ISO Code			SDNCN	SDNCN	SVJB R/L	SVJB R/L	SVHB R/L	SVHB R/L
Cutting Angle			62.5°	62.5°	93°	93°	107.5°	107.5°
Clamping Type	**T System**	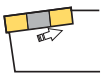	-	-	-	-	-	-
	Page							
	P System	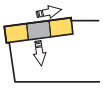	-	-	-	-	-	-
	Page							
	M System	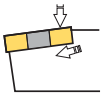	-	-	-	-	-	-
	Page							
	S System	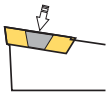	✓ Size Range (mm) #0808 - 1616	✓ Size Range (mm) #1212 - 3232	✓ Size Range (mm) #1212 - 2525	✓ Size Range (mm) #1616 - 3232	✓ Size Range (mm) #1616 - 2525	✓ Size Range (mm) #1616 - 3232
	Page		**A45**	**A45**	**A47**	**A47**	**A48**	**A48**
	S System Swiss (K.O)	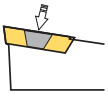	-	-	Size Range (mm) #1010 - 2020	-	-	-
	Page				**A67**			

Insert			VBM. 1103.. ISO	VBM. 1604.. ISO	VBM. 1103.. ISO	VBM. 1604.. ISO	VCM. 1103.. ISO	VCM. 1604.. ISO
Size (mm)			#1616 - 2525	#1616 - 3232	#1616 - 2525	#1616 - 3232	#1616 - 2020	#2020 - 3232
ISO Code			SVZB R/L	SVZB R/L	SVVBN	SVVBN	SVJC R/L	SVJC R/L
Cutting Angle			100°	100°	72.5°	72.5°	93°	93°
Clamping Type	**T System**	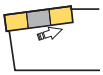	-	-	-	-	-	-
	Page							
	P System	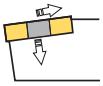	-	-	-	-	-	-
	Page							
	M System	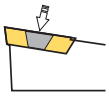	-	-	-	-	-	-
	Page							
	S System	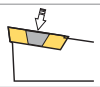	✓ Size Range (mm) #1616 - 2525	✓ Size Range (mm) #1616 - 3232	✓ Size Range (mm) #1616 - 2525	✓ Size Range (mm) #1616 - 3232	✓ Size Range (mm) #1616 - 2020	✓ Size Range (mm) #2020 - 3232
	Page		**A49**	**A49**	**A49**	**A49**	**A50**	**A50**
	S System Swiss (K.O)	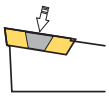	-	-	-	-	✓ Size Range (mm) #1616 - 2020	✓ Size Range (mm) #2020 - 3232
	Page						**A70**	**A70**

Insert			VCM. 1103.. ISO	VCM. 1604.. ISO	VCM. 1103.. ISO	VCM. 1604.. ISO	VCM. 1103.. ISO	VCM. 1604.. ISO
Size (mm)			#1616 - 2020	#2020 - 3232	#1616 - 2020	#2020 - 3232	#1212 - 1616	#1616 - 2020
ISO Code			SVHC R/L	SVHC R/L	SVVCN	SVVCN	SVAC R/L	SVAC R/L
Cutting Angle			107.5°	107.5°	72.5°	72.5°	90°	90°
Clamping Type	**T System**	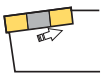	-	-	-	-	-	-
	Page							
	P System	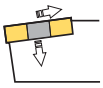	-	-	-	-	-	-
	Page							
	M System	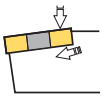	-	-	-	-	-	-
	Page							
	S System	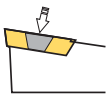	✓ Size Range (mm) #1616 - 2020	✓ Size Range (mm) #2020 - 3232	✓ Size Range (mm) #1616 - 2020	✓ Size Range (mm) #2020 - 3232	-	-
	Page		**A50**	**A50**	**A51**	**A51**		
	S System Swiss (K.O)	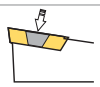	-	-	-	-	✓ Size Range (mm) #1616 - 2020	✓ Size Range (mm) #1616 - 2020
	Page						**A70**	**A70**

Insert			CCM. 0602.. ISO	CCM.09T3.. ISO	CCM.1204.. ISO	CCM. 0602.. ISO	CCM.09T3.. ISO	CCM.1204.. ISO
Size (mm)			#0808 - 1212	#1212 - 2525	#1616 - 2525	#0808 - 1010	#1212 - 2525	#2020 - 2525
ISO Code			SCLC R/L	SCLC R/L	SCLC R/L	SCAC R/L	SCAC R/L	SCAC R/L
Cutting Angle			95°	95°	95°	90°	90°	90°
Clamping Type	**T System**	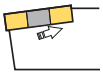	-	-	-	-	-	-
	Page							
	P System	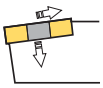	-	-	-	-	-	-
	Page							
	M System	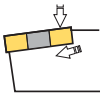	-	-	-	-	-	-
	Page							
	S System	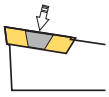	✓ Size Range (mm) #0808 - 1212	✓ Size Range (mm) #1212 - 2525	✓ Size Range (mm) #1616 - 2525	✓ Size Range (mm) #0808 - 1010	✓ Size Range (mm) #1212 - 2525	✓ Size Range (mm) #2020 - 2525
	Page		**A52**	**A52**	**A52**	**A53**	**A53**	**A53**
	S System Swiss (K.O)	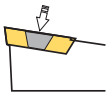	✓ Size Range (mm) #1010 - 1616	✓ Size Range (mm) #1212 - 2020	-	✓ Size Range (mm) #1010 - 1616	✓ Size Range (mm) #1212 - 1616	-
	Page		**A68**	**A68**	-	**A69**	**A69**	-

Insert			CCM. 0602.. ISO	CCM.09T3.. ISO	CCM.1204.. ISO	SCM. 09T3.. ISO	SCM. 1204.. ISO	SCM. 09T3.. ISO
Size (mm)			#0808 - 1010	#1212 - 2525	#2020 - 2525	#1212 - 2525	#1616 - 2525	#1212 - 2525
ISO Code			SCMCN	SCMCN	SCMCN	SSSC R/L	SSSC R/L	SSDCN
Cutting Angle			50°	50°	50°	45°	45°	45°
Clamping Type	**T System**	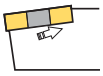	-	-	-			
	Page							
	P System	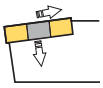	-	-	-			
	Page							
	M System	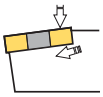	-	-	-			
	Page							
	C System	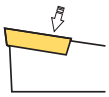	-	-	-			
	Page							
	S System	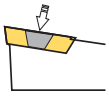	✓ Size Range (mm) #0808 - 1010	✓ Size Range (mm) #1212 - 2525	✓ Size Range (mm) #2020 - 2525	✓ Size Range (mm) #1212 - 2525	✓ Size Range (mm) #1616 - 2525	✓ Size Range (mm) #1212 - 2525
	Page		**A53**	**A53**	**A53**	**A54**	**A54**	**A54**

Insert			SCM. 1204.. ISO	TCM. 0902.. ISO	TCM. 1102.. ISO	TCM. 16T3.. ISO	TCM. 0902.. ISO	TCM. 1102.. ISO
Size (mm)			#1616 - 2525	#0808 - 1010	#1212 - 1616	#1616 - 3232	#0808 - 1010	#1212 - 1616
ISO Code			SSDCN	STJC R/L	STJC R/L	STJC R/L	STGC R/L	STGC R/L
Cutting Angle			45°	93°	93°	93°	90°	90°
Clamping Type	**T System**	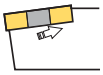		-	-	-	-	-
	Page							
	P System	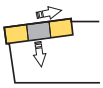	-	-	-	-	-	-
	Page							
	M System	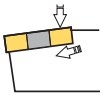	-	-	-	-	-	-
	Page							
	S System	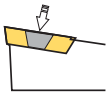	✓ Size Range (mm) #1616 - 2525	✓ Size Range (mm) #0808 - 1010	✓ Size Range (mm) #1212 - 1616	✓ Size Range (mm) #1616 - 3232	✓ Size Range (mm) #0808 - 1010	✓ Size Range (mm) #1212 - 1616
	Page		**A54**	**A55**	**A55**	**A55**	**A55**	**A55**
	S System Swiss (K.O)	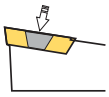	-	-	-	-	-	✓ Size Range (mm) #1212 - 1616
	Page							**A71**

Insert			TCM. 16T3.. ISO	TCM. 0902.. ISO	TCM. 1102.. ISO	TCM. 16T3.. ISO	TCM. 1102.. ISO	TCM. 16T3.. ISO
Size (mm)			#1616 - 3232	#0808 - 1010	#1212 - 1616	#1616 - 3232	#2020	#2020 - 3232
ISO Code			STGC R/L	STFC R/L	STFC R/L	STFC R/L	STNCN	STNCN
Cutting Angle			90°	90°	90°	90°	90°	90°
Clamping Type	**T System**	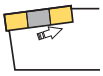	-	-	-	-	-	-
	Page							
	P System	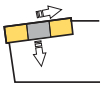	-	-	-	-	-	-
	Page							
	M System	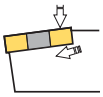	-	-	-	-	-	-
	Page							
	S System	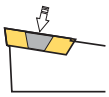	✓ Size Range (mm) #1616 - 3232	✓ Size Range (mm) #0808 - 1010	✓ Size Range (mm) #1212 - 1616	✓ Size Range (mm) #1616 - 3232	✓ Size Range (mm) #2020	✓ Size Range (mm) #2020 - 3232
	Page		**A55**	**A56**	**A56**	**A56**	**A57**	**A57**
	S System Swiss (K.O)	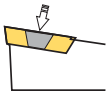	✓ Size Range (mm) #1616 - 2020					
	Page		**A71**					

Insert			TCM. 0902.. ISO	TCM. 1102.. ISO	TCM. 16T3.. ISO	RC.T 1204.. ISO	RC.T 1605.. ISO	
Size (mm)			#0808 - 1010	#1212 - 1616	#1616 - 3232	#2525 - 3232	#2525 - 3232	
ISO Code			STUC R/L	STUC R/L	STUC R/L	SRDC R/L	SRDC R/L	
Cutting Angle			93°	93°	93°	-°	-°	
Clamping Type	**T System**	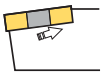				-	-	
	Page							
	P System	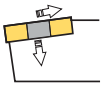				-	-	
	Page							
	M System	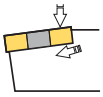				-	-	
	Page							
	C System	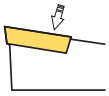				-	-	
	Page							
	S System	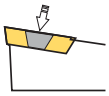	✓ Size Range (mm) #0808 - 1010	✓ Size Range (mm) #1212 - 1616	✓ Size Range (mm) #1616 - 3232	✓ Size Range (mm) #2020 - 3232	✓ Size Range (mm) #2525 - 3232	
	Page		**A56**	**A56**	**A56**	**A58**	**A58**	

Insert			RC.T 0602.. ISO	RC.T 0803.. ISO	RC.T 10T3.. ISO	RC.T 1204.. ISO	RC.T 1605.. ISO	RC.T 2006.. ISO
Size (mm)			#1616 - 2525	#1616 - 3232	#1616 - 3232	#2020 - 3232	#2525 - 3232	#2525 - 3232
ISO Code			SRGC R/L	SRGC R/L	SRGC R/L	SRGC R/L	SRGC R/L	SRGC R/L
Cutting Angle			-°	-°	-°	-°	-°	-°
Clamping Type	**T System**	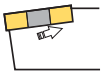	-	-	-	-	-	
	Page							
	P System	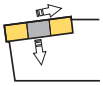	-	-	-	-	-	
	Page							
	M System	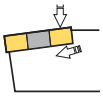	-	-	-	-	-	
	Page							
	C System	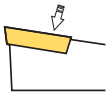	-	-	-	-	-	
	Page							
	S System	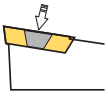	✓ Size Range (mm) #1616 - 2525	✓ Size Range (mm) #1616 - 3232	✓ Size Range (mm) #1616 - 3232	✓ Size Range (mm) #2020 - 3232	✓ Size Range (mm) #2525 - 3232	✓ Size Range (mm) #2525 - 3232
	Page		**A59**	**A59**	**A59**	**A59**	**A59**	**A59**

Insert			RC.T 10T3.. ISO	RC.T 1204.. ISO	RC.T 1605.. ISO	RC.T 0803.. ISO	RC.T 10T3.. ISO	RC.T 1204.. ISO
Size (mm)			#2020 - 2525	#2020 - 2525	#2020 - 2525	#2525	#2525	#2525
ISO Code			SRHC R/L	SRGC R/L	SRHC R/L	SRXC R/L	SRXC R/L	SRXC R/L
Cutting Angle			-°	-°	-°	-°	-°	-°
Clamping Type	T System	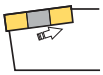	-	-	-			
	Page							
	P System	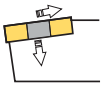	-	-	-			
	Page							
	M System	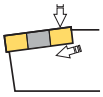	-	-	-			
	Page							
	C System	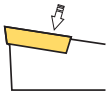	-	-	-			
	Page							
	S System	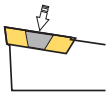	✓ Size Range (mm) #2020 - 2525	✓ Size Range (mm) #2020 - 2525	✓ Size Range (mm) #2020 - 2525	✓ Size Range (mm) #2525	✓ Size Range (mm) #2525	✓ Size Range (mm) #2525
	Page		**A60**	**A60**	**A60**	**A60**	**A60**	**A60**

Insert			RC.T 0602.. ISO	RC.T 0803.. ISO	RC.T 10T3.. ISO	RC.T 1204.. ISO	RC.T 1605.. ISO	RC.T 2006.. ISO
Size (mm)			#1616 - 2525	#1616 - 3232	#1616 - 3232	#2020 - 3232	#2525 - 3232	#2525 - 4040
ISO Code			SRDCN	SRDCN	SRDCN	SRDCN	SRDCN	SRDCN
Cutting Angle			-°	-°	-°	-°	-°	-°
Clamping Type	T System	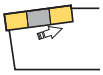	-	-	-	-	-	
	Page							
	P System	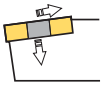	-	-	-	-	-	
	Page							
	M System	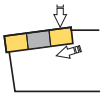	-	-	-	-	-	
	Page							
	C System	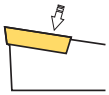	-	-	-	-	-	
	Page							
	S System	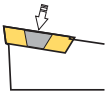	✓ Size Range (mm) #1616 - 2525	✓ Size Range (mm) #1616 - 3232	✓ Size Range (mm) #1616 - 3232	✓ Size Range (mm) #2020 - 3232	✓ Size Range (mm) #2525 - 3232	✓ Size Range (mm) #2525 - 4040
	Page		**A61**	**A61**	**A61**	**A61**	**A61**	**A61**

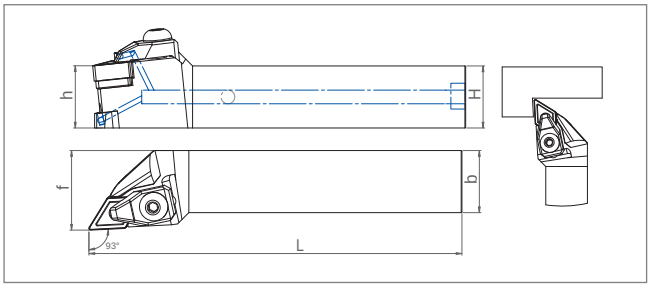

Ordering Code		Item Designation	Dimensions (mm)				Master Insert*
Direction		TDJNR/L-JT (93)	h=H	b	L	f	
Right	Left						
SM56022	SM56039	TDJNR/L 2525 M15-JT	25	25	150	32	DNM.1506..

Cooling accessories are optional / See Page "529" for cooling accessory.
Soğutma ekipmanları opsiyoneldir / Bkz. Sayfa "529" Soğutma aksesuarları için

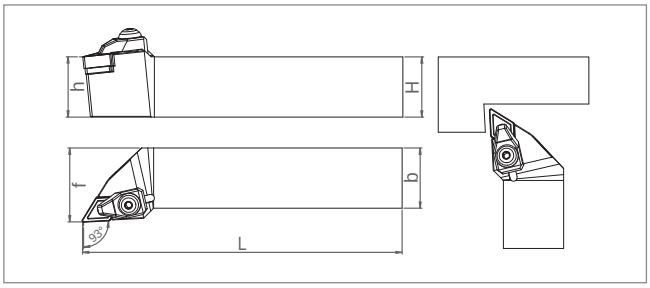

Ordering Code		Item Designation	Dimensions (mm)				Master Insert*
Direction		TDJNR/L (93)	h=H	b	L	f	
Right	Left						
SM26766	SM00407	TDJNR/L 1616 H11	16	16	100	20	DNM.1104..
SM00353	SM00360	TDJNR/L 2020 K11	20	20	125	26	
SM00346	SM00377	TDJNR/L 2525 M11	25	25	150	32	
SM29675	SM34006	TDJNR/L 2020 K1504	20	20	125	26	DNM.1504..
SM29682	SM33993	TDJNR/L 2525 M1504	25	25	150	32	
SM33948	SM33986	TDJNR/L 3232 P1504	32	32	170	39	
SM00421	SM00469	TDJNR/L 2020 K15	20	20	125	26	DNM.1506..
SM00438	SM00483	TDJNR/L 2525 M15	25	25	150	32	
SM00506	SM00490	TDJNR/L 3232 P15	32	32	170	39	
SM00520	SM00513	TDJNR/L 4040 S15	40	40	250	48	
SM73685	**SM73692**	**TDJNR/L 5050 S15**	**50**	**50**	**250**	**60**	

Size Designation	Master Insert*	Spare Parts						
		Clamp	Screw	Shim	Shim Screw	Stamp	Stamp	Allen Key
1616 - 2525	DNM.1104..	TSK2 9102	TSBV M5x23-9202	BAX DN11-9601	TSAV M4x10x6-9402	-	-	SAK-AA3-9902
2020 - 3232	DNM.1504..	TSK1 9101	TSBV M6x28 9205	BAX DN15 9602	TSAV M4x10 9403	TSP 6.5X12 9705	-	
2020 - 5050	DNM.1506..							
2525-JT							SMHT G1/8-AA3 9259	

*Suitable Insert is ISO
**Spare Parts Ordering Codes

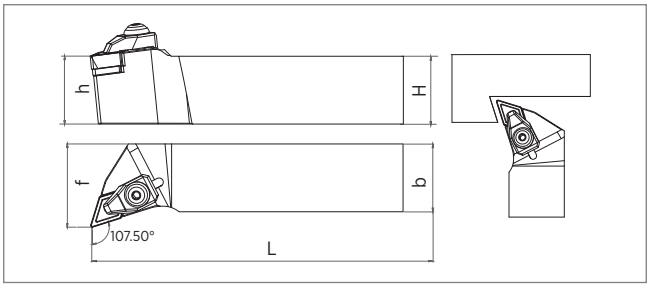

Ordering Code		Item Designation	Dimensions (mm)				Master Insert*
Direction		*TDHNR/L (107.5)*	*h=H*	*b*	*L*	*f*	
Right	*Left*						
SM34044	SM34075	TDHNR/L 2525 M1504	25	25	150	32	DNM.1504..
SM34051	SM34068	TDHNR/L 3232 P1504	32	32	170	38	
SM38783	SM38776	TDHNR/L 2020 K15	20	20	125	26	DNM.1506..
SM26544	SM26926	TDHNR/L 2525 M15	25	25	150	32	
SM26919	SM26933	TDHNR/L 3232 P15	32	32	170	38	

Size Designation	Master Insert*	Spare Parts					
		Clamp	*Screw*	*Shim*	*Shim Screw*	*Stamp*	*Allen Key*
1616 - 2525	DNM.1104..	TSK2 9102	TSBV M5x23-9202	BAX DN11-9601	TSAV M4x10x6-9402	-	SAK-AA3-9902
2020 - 3232	DNM.1504..	TSK1 9101	TSBV M6x28 9205	BAX DN15 9602	TSAV M4x10 9403	TSP 6.5X12 9705	
2020 - 5050	DNM.1506..						

*Suitable Insert is ISO

**Spare Parts Ordering Codes*

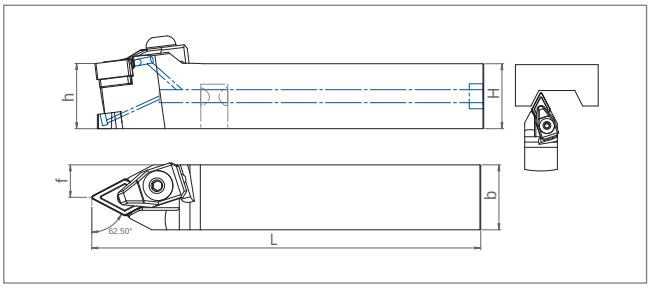

Ordering Code	Item Designation	Dimensions (mm)				Master Insert*
Direction / *Neutral*	*TDNNN-JT (62.5)*	*h=H*	*b*	*L*	*f*	
SM56091	TDNNN 2525 M15-JT	25	25	150	12.5	DNM.1506..

Cooling accessories are optional / See Page "529" for cooling accessory.
Soğutma ekipmanları opsiyoneldir / Bkz. Sayfa "529" Soğutma aksesuarları için

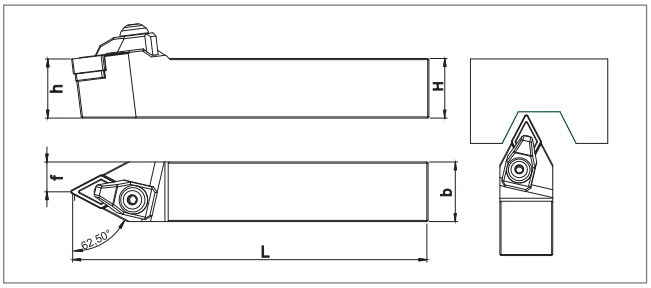

Ordering Code	Item Designation	Dimensions (mm)				Master Insert*
Direction / *Neutral*	*TDNNN (62.5)*	*h=H*	*b*	*L*	*f*	
SM00414	TDNNN 1616 H11	16	16	100	8	DNM.1104..
SM00384	TDNNN 2020 K11	20	20	125	10	
SM00391	TDNNN 2525 M11	25	25	150	12.5	
SM34013	TDNNN 2020 K1504	20	20	125	10	DNM.1504..
SM34020	TDNNN 2525 M1504	25	25	150	12.5	
SM34037	TDNNN 3232 P1504	32	32	170	16	
SM00452	TDNNN 2020 K15	20	20	125	10	DNM.1506..
SM00476	TDNNN 2525 M15	25	25	150	12.5	
SM00445	TDNNN 3232 P15	32	32	170	16	
SM00537	TDNNN 4040 S15	40	40	250	20	

Size Designation	Master Insert*	Spare Parts						
		Clamp	*Screw*	*Shim*	*Shim Screw*	*Stamp*	*Plıg*	*Allen Key*
1616 - 2525	DNM.1104..	TSK2 9102	TSBV M5x23-9202	BAX DN11-9601	TSAV M4x10x6-9402	-	-	SAK-AA3-9902
2020 - 3232	DNM.1504..	TSK1 9101	TSBV M6x28 9205	BAX DN15 9602	TSAV M4x10 9403	TSP 6.5X12 9705	-	
2020 - 5050	DNM.1506..							
2525-JT							SMHT G1/8-AA3 9259	

*Suitable Insert is ISO
*Spare Parts Ordering Codes

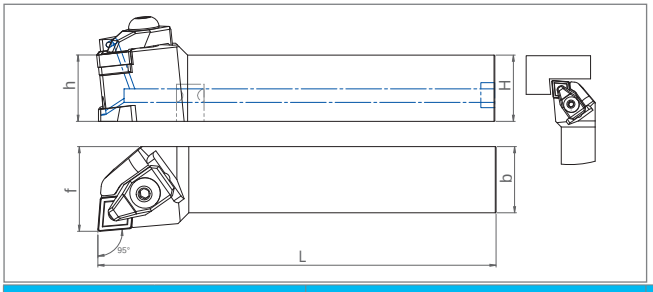

Ordering Code		Item Designation	Dimensions (mm)				Master Insert*
Direction		TCLNR/L-JT (95)	h=H	b	L	f	
Right	Left						
SM56060	SM56077	TCLNR/L 2525 M12-JT	25	25	150	32	CNM.1204..

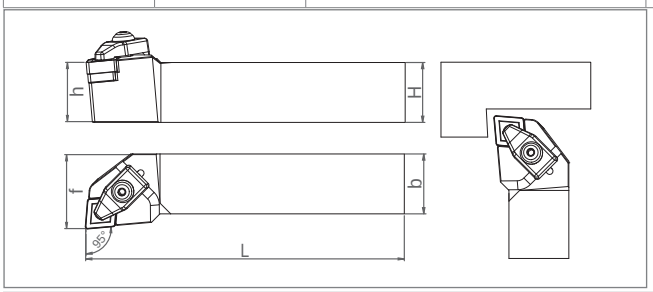

Ordering Code		Description	Dimensions (mm)				Master Insert*
Direction		TCLNR/L (95)	h=H	b	L	f	
Right	Left						
SM00210	SM55377	TCLNR/L 2525 M09	25	25	150	32	CNM.0903..
SM00025	SM00032	TCLNR/L 2020 K12	20	20	125	26	CNM.1204..
SM00056	SM00063	TCLNR/L 2525 M12	25	25	150	32	
SM00087	SM00094	TCLNR/L 3232 P12	32	32	170	39	
SM27091	SM27107	TCLNR/L 4040 S12	40	40	250	48	
SM00148	SM00155	TCLNR/L 2525 M16	25	25	150	32	CNM.1606..
SM00179	SM00186	TCLNR/L 3232 P16	32	32	170	40	
SM00209	SM00193	TCLNR/L 4040 S16	40	40	250	49	
NEW **SM73708**	**SM73715**	**TCLNR/L 5050 S16**	**50**	**50**	**250**	**60**	
NEW **SM78178**	**SM78185**	**TCLNR/L 2525 M19**	**25**	**25**	**150**	**32**	CNM.1906..
SM00261	SM00278	TCLNR/L 3232 P19	32	32	170	40	
SM00285	SM00292	TCLNR/L 4040 S19	40	40	250	49	
NEW **SM73722**	**SM73739**	**TCLNR/L 5050 S19**	**50**	**50**	**250**	**60**	

Size Designation	Master Insert*	Spare Parts						
		Clamp	Screw	Shim	Shim Screw	Stamp	Plug	Allen Key
2525	CNM.0903..	TSK2-9102	TSBV M5x23-9202	BAX CC09-9616	TSAV M4x10x6 9402	-	-	SAK-AA3-9902
2020 - 4040	CNM.1204..	TSK1-9101	TSBV M6x28-9205	BAX CN12-9603	TSAV M4x10-9403	TSP 6.5x12-9705	-	
2525 - 5050	CNM.1606..	TSK3-9103	TSBV M6x28x7 9206	BAX CN16-9604	TSAV M6x14x9 9404	-	-	
2525 - 5050	CNM.1906..	TSK4-9104	TSBV M8x30-9207	BAX CN19-9605	TSAV M6x16x11 9406			SAK-AA4-9903
2525-JT	CNM.1204..	TSK1-9101	TSBV M6x28-9205	BAX CN12-9603	TSAV M4x10-9403	TSP 6.5x12-9705	SMHT G1/8-AA3 9259	

**Spare Parts Ordering Codes

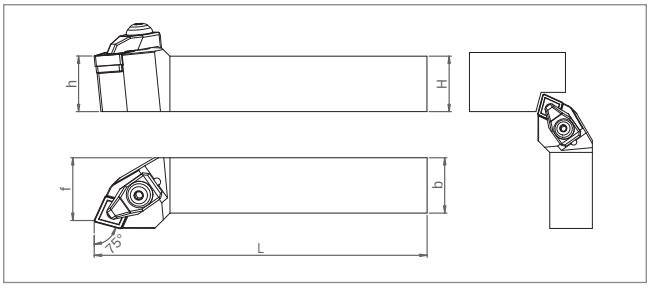

Ordering Code		Item Designation	Dimensions (mm)				Master Insert*
Direction		*TCRNR/L (75)*	*h=H*	*b*	*L*	*f*	
Right	*Left*						
SM00388	SM00395	TCRNR/L 2020 K12	20	20	125	23	CNM.1204..
SM00401	SM00418	TCRNR/L 2525 M12	25	25	150	29	
SM00432	SM00449	TCRNR/L 2525 M16	25	25	150	29	CNM.1606..
SM00456	SM00463	TCRNR/L 3232 P16	32	32	170	34.5	

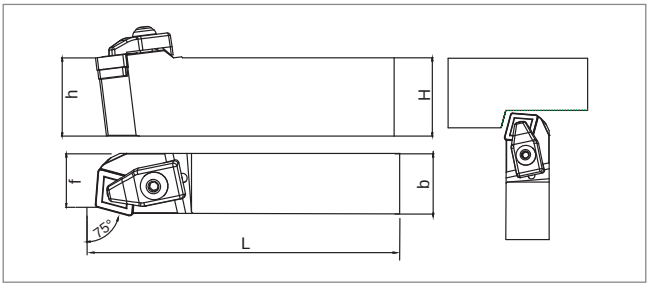

Ordering Code		Item Designation	Dimensions (mm)				Master Insert*
Direction		*TCBNR/L (75)*	*h=H*	*b*	*L*	*f*	
Right	*Left*						
SM34082	SM34099	TCBNR/L 2525 M12	25	25	150	23	CNM.1204..
SM34112	SM34105	TCBNR/L 2525 M16	25	25	150	22.5	CNM.1606..
NEW **SM78925**	**SM78932**	**TCBNR/L 2525 M19**	**25**	**25**	**150**	**22.5**	CNM.1906..
SM49055	SM49062	TCBNR/L 3232 P19	32	32	170	28	

Size Designation	Master Insert*	Spare Parts					
		Clamp	*Screw*	*Shim*	*Shim Screw*	*Stamp*	*Allen Key*
2525	CNM.0903..	TSK2-9102	TSBV M5x23-9202	BAX CC09-9616	TSAV M4x10x6-9402	-	SAK-AA3-9902
2020 - 4040	CNM.1204..	TSK1-9101	TSBV M6x28-9205	BAX CN12-9603	TSAV M4x10-9403	TSP 6.5x12-9705	
2525 - 5050	CNM.1606..	TSK3-9103	TSBV M6x28x7-9206	BAX CN16-9604	TSAV M6x14x9-9404	-	
3232 - 5050	CNM.1906..	TSK4-9104	TSBV M8x30-9207	BAX CN19-9605	TSAV M6x16x11-9406		SAK-AA4-9903

*Suitable Insert is ISO

**Spare Parts Ordering Codes*

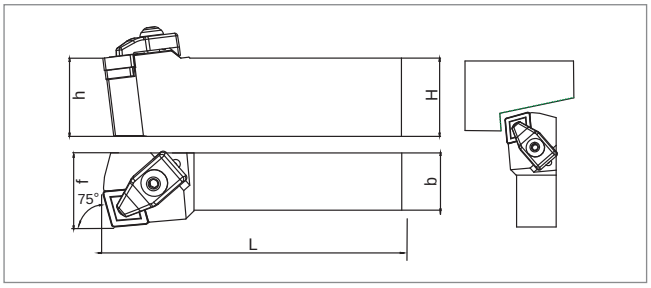

Ordering Code		Item Designation	Dimensions (mm)				Master Insert*
Direction		*TCKNR/L (75)*	*h=H*	*b*	*L*	*f*	
Right	*Left*						
SM44609	SM44616	TCKNR/L 2020 K12	20	20	125	26	CNM.1204..
SM44623	SM44630	TCKNR/L 2525 M12	25	25	150	32	
SM44647	SM44654	TCKNR/L 2525 M16	25	25	150	32	CNM.1606..
SM44661	SM44678	TCKNR/L 3232 P16	32	32	170	40	

Size Designation	Master Insert*	Spare Parts					
		Clamp	*Screw*	*Shim*	*Shim Screw*	*Stamp*	*Allen Key*
2525	CNM.0903..	TSK2-9102	TSBV M5x23-9202	BAX CC09-9616	TSAV M4x10x6-9402	-	SAK-AA3-9902
2020 - 4040	CNM.1204..	TSK1-9101	TSBV M6x28-9205	BAX CN12-9603	TSAV M4x10-9403	TSP 6.5x12-9705	
2525 - 5050	CNM.1606..	TSK3-9103	TSBV M6x28x7-9206	BAX CN16-9604	TSAV M6x14x9-9404	-	
3232 - 5050	CNM.1906..	TSK4-9104	TSBV M8x30-9207	BAX CN19-9605	TSAV M6x16x11-9406		SAK-AA4-9903

*Suitable Insert is ISO

**Spare Parts Ordering Codes*

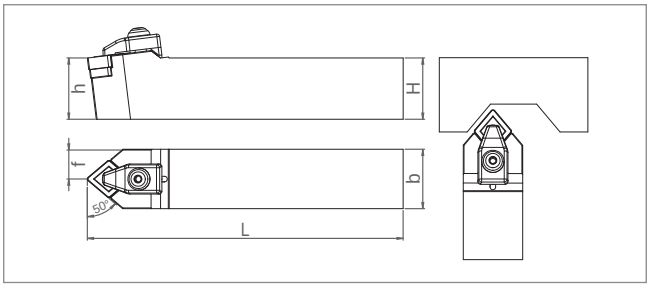

Ordering Code	Item Designation	Dimensions (mm)				Master Insert*
Direction	*TCMNN (50)*	*h=H*	*b*	*L*	*f*	
Neutral						
SM00131	TCMNN 1616 H12	16	16	100	8	CNM.1204..
SM00117	TCMNN 2020 K12	20	20	125	10	
SM00124	TCMNN 2525 M12	25	25	150	12.5	
SM00018	TCMNN 3232 P12	32	32	170	16	
SM00230	TCMNN 2525 M16	25	25	150	12.5	CNM.1606..
SM00247	TCMNN 3232 P16	32	32	170	16	
SM00216	TCMNN 4040 S16	40	40	250	20	
SM00339	TCMNN 3232 P19	32	32	170	16	CNM.1906..
SM00308	TCMNN 4040 S19	40	40	250	20	

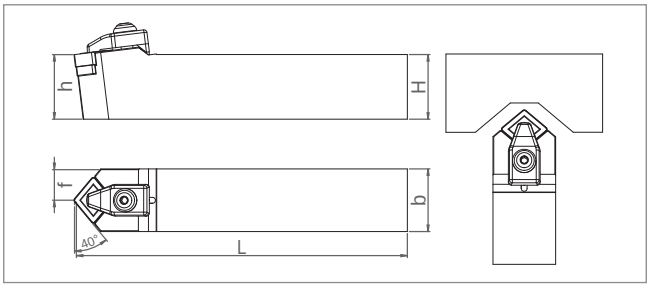

Ordering Code	Item Designation	Dimensions (mm)				Master Insert*
Direction	*TCZNN (40)*	*h=H*	*b*	*L*	*f*	
Neutral						
SM00049	TCZNN 2020 K12	20	20	125	10	CNM.1204..
SM00070	TCZNN 2525 M12	25	25	150	12.5	
SM00100	TCZNN 3232 P12	32	32	170	16	
SM00162	TCZNN 2525 M16	25	25	150	12.5	CNM.1606..
SM00254	TCZNN 3232 P16	32	32	170	16	
SM00223	TCZNN 4040 S16	40	40	250	20	
SM00322	TCZNN 3232 P19	32	32	170	16	CNM.1906..
SM00315	TCZNN 4040 S19	40	40	250	20	

Size Designation	Master Insert*	Spare Parts					
		Clamp	*Screw*	*Shim*	*Shim Screw*	*Stamp*	*Allen Key*
1616	CNM.1204..	TSK1-9101	TSBV M6x26-9203	BAX CN12-9603	TSAV M4x10-9403	TSP 6.5x12-9705	SAK-AA3-9902
2020 - 4040			TSBV M6x28-9205				
2525 - 4040	CNM.1606..	TSK3-9103	TSBV M6x28x7-9206	BAX CN16-9604	TSAV M6x14x9-9404	-	
3232 - 4040	CNM.1906..	TSK4-9104	TSBV M8x30-9207	BAX CN19-9605	TSAV M6x16x11-9406		SAK-AA4-9903

*Suitable Insert is ISO

**Spare Parts Ordering Codes*

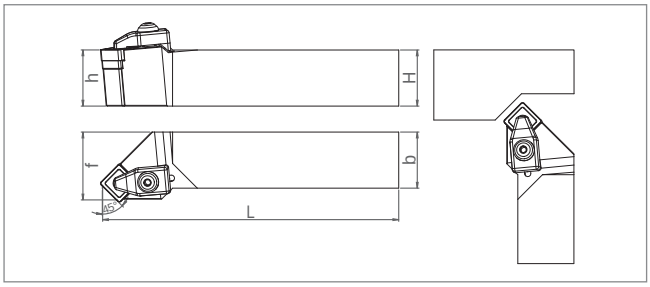

Ordering Code		Item Designation	Dimensions (mm)				Master Insert*
Direction		*TSSNR/L (45)*	*h=H*	*b*	*L*	*f*	
Right	*Left*						
SM00544	SM00551	TSSNR/L 2020 K12	20	20	125	26	SNM.1204..
SM00575	SM00582	TSSNR/L 2525 M12	25	25	150	32	
SM00605	SM00612	TSSNR/L 3232 P12	32	32	170	38	
SM00735	SM00759	TSSNR/L 2525 M15	25	25	150	32	SNM.1506..
SM00766	SM00797	TSSNR/L 3232 P15	32	32	170	40	
SM00704	SM00711	TSSNR/L 4040 S15	40	40	250	49	
SM73760	**SM73777**	**TSSNR/L 5050 S15**	**50**	**50**	**250**	**60**	
SM49079	SM49086	TSSNR/L 3232 P19	32	32	170	40	SNM.1906..
SM49093	SM49109	TSSNR/L 4040 S19	40	40	250	49	
SM73784	**SM73791**	**TSSNR/L 5050 S19**	**50**	**50**	**250**	**60**	

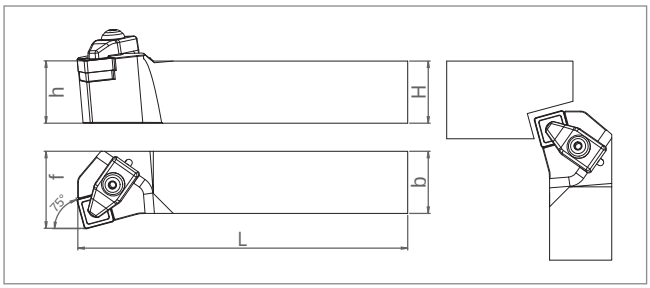

Ordering Code		Item Designation	Dimensions (mm)				Master Insert*
Direction		*TSKNR/L (75)*	*h=H*	*b*	*L*	*f*	
Right	*Left*						
SM00636	SM00643	TSKNR/L 2020 K12	20	20	125	26	SNM.1204..
SM00650	SM00667	TSKNR/L 2525 M12	25	25	150	32	
SM00674	SM00681	TSKNR/L 3232 P12	32	32	170	39	
SM00803	SM00810	TSKNR/L 2525 M15	25	25	150	32	SNM.1506..
SM00780	SM00698	TSKNR/L 3232 P15	32	32	170	39	

Size Designation	Master Insert*	Spare Parts					
		Clamp	*Screw*	*Shim*	*Shim Screw*	*Stamp*	*Allen Key*
2020 - 3232	SNM.1204..	TSK1-9101	TSBV M6x28-9205	BAX SN12-9608	TSAV M4x10-9403	TSP 6.5x12-9705	SAK-AA3-9902
2525 - 5050	SNM.1506..	TSK3-9103	TSBV M6x28x7-9206	BAX SN15-9609	TSAV M6x14x9-9404	-	
3232 - 5050	SNM.1906..	TSK4-9104	TSBV M8x30-9207	BAX SN19-9629	TSAV M6x16x11-9406		SAK-AA4-9903

*Suitable Insert is ISO

***Spare Parts Ordering Codes*

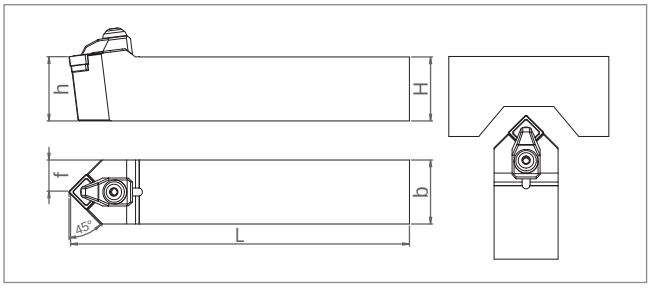

Ordering Code	Item Designation	Dimensions (mm)				Master Insert*
Direction	*TSDNN (45)*	*h=H*	*b*	*L*	*f*	
Neutral						
SM00568	TSDNN 2020 K12	20	20	125	10	SNM.1204..
SM00599	TSDNN 2525 M12	25	25	150	12.5	
SM00629	TSDNN 3232 P12	32	32	170	16	
SM00742	TSDNN 2525 M15	25	25	150	12.5	SNM.1506..
SM00773	TSDNN 3232 P15	32	32	170	16	
SM00728	TSDNN 4040 S15	40	40	250	20	

Size Designation	Master Insert*	Spare Parts					
		Clamp	*Screw*	*Shim*	*Shim Screw*	*Stamp*	*Allen Key*
2020 - 3232	SNM.1204..	TSK1-9101	TSBV M6x28-9205	BAX SN12-9608	TSAV M4x10-9403	TSP 6.5x12-9705	SAK-AA3-9902
2525 - 4040	SNM.1506..	TSK3-9103	TSBV M6x28x7-9206	BAX SN15-9609	TSAV M6x14x9-9404	-	
3232 - 4040	SNM.1906..	TSK4-9104	TSBV M8x30-9207	BAX SN19-9629	TSAV M6x16x11-9406		SAK-AA4-9903

*Suitable Insert is ISO

***Spare Parts Ordering Codes*

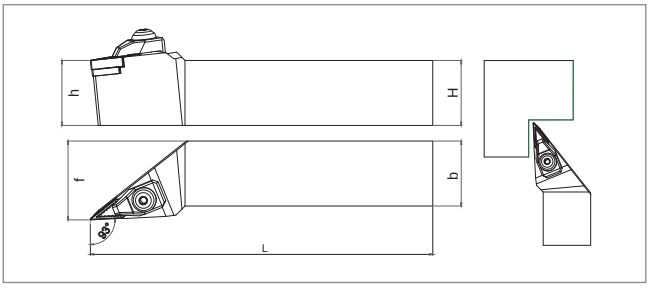

Ordering Code		Item Designation	Dimensions (mm)				Master Insert*
Direction		*TVJNR/L (93)*	*h=H*	*b*	*L*	*f*	
Right	*Left*						
SM01015	SM01084	TVJNR/L 2020 K16	20	20	125	26	VNM.1604..
SM01039	SM01046	TVJNR/L 2525 M16	25	25	150	32	
SM01060	SM01077	TVJNR/L 3232 P16	32	32	170	38	
SM32514	SM32521	TVJNR/L 4040 S16	40	40	250	48	

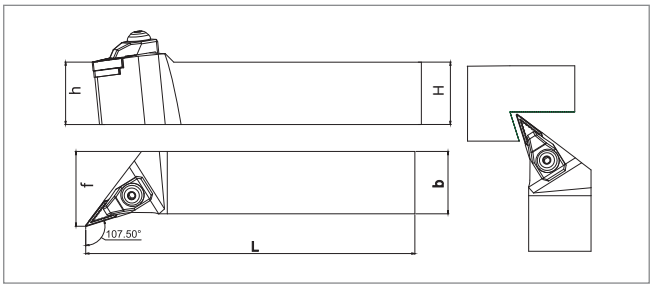

Ordering Code		Item Designation	Dimensions (mm)				Master Insert*
Direction		*TVHNR/L (107.5)*	*h=H*	*b*	*L*	*f*	
Right	*Left*						
SM23796	SM23802	TVHNR/L 2020 K16	20	20	125	26	VNM.1604..
SM23819	SM23826	TVHNR/L 2525 M16	25	25	150	32	
SM27114	SM27121	TVHNR/L 3232 P16	32	32	170	38	

Size Designation	Master Insert*	Spare Parts					
		Clamp	*Screw*	*Shim* 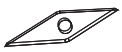	*Shim Screw*	*Stamp*	*Allen Key*
2020	VNM.1604..	TSK5-9105	TSBV M6x28-9205	BAX VN16-9612	TSAV M4x10x6 9402	TSP 6.5x12-9705	SAK-AA3-9902
2525 - 4040							

*Suitable Insert is ISO

***Spare Parts Ordering Codes*

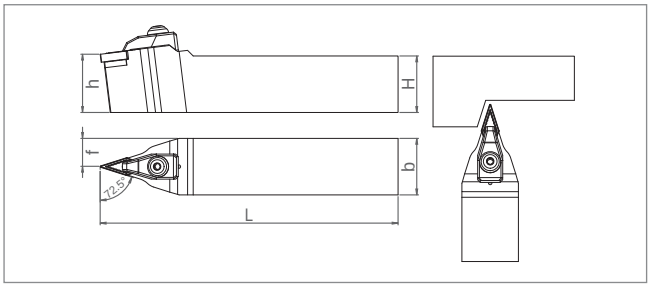

Ordering Code	Item Designation	Dimensions (mm)				Master Insert*
Direction	*TVVNN (72.5)*	*h=H*	*b*	*L*	*f*	
Neutral						
SM01022	TVVNN 2020 K16	20	20	125	10	VNM.1604..
SM01053	TVVNN 2525 M16	25	25	150	12.5	
SM01091	TVVNN 3232 P16	32	32	170	16	
SM32538	TVVNN 4040 S16	40	40	250	20	

Size Designation	Master Insert*	Spare Parts					
		Clamp	*Screw*	*Shim*	*Shim Screw*	*Stamp*	*Allen Key*
				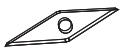			
2020	VNM.1604..	TSK5-9105	TSBV M6x28-9205	BAX VN16-9612	TSAV M4x10x6 9402	TSP 6.5x12-9705	SAK-AA3-9902
2525 - 4040							

*Suitable Insert is ISO

**Spare Parts Ordering Codes*

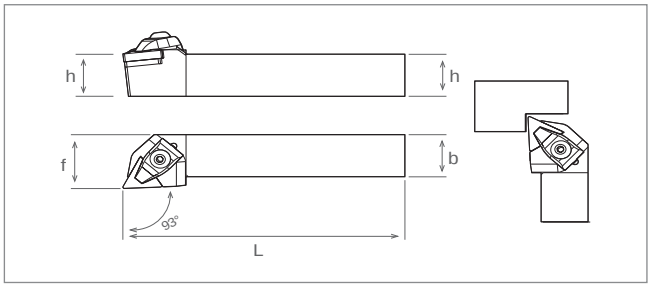

Ordering Code		Item Designation	Dimensions (mm)				Master Insert*
Direction		*TTJNR/L(93)*	*h=H*	*b*	*L*	*f*	
Right	*Left*						
SM00827	SM00834	TTJNR/L 2020 K16	20	20	125	26	TNM.1604..
SM00858	SM00865	TTJNR/L 2525 M16	25	25	150	32	
SM00889	SM00896	TTJNR/L 3232 P16	32	32	170	38	
SM00919	SM00926	TTJNR/L 2525 M22	25	25	150	32	TNM.2204..
SM00940	SM00957	TTJNR/L 3232 P22	32	32	170	38	
SM00971	SM00988	TTJNR/L 4040 S22	40	40	250	48	

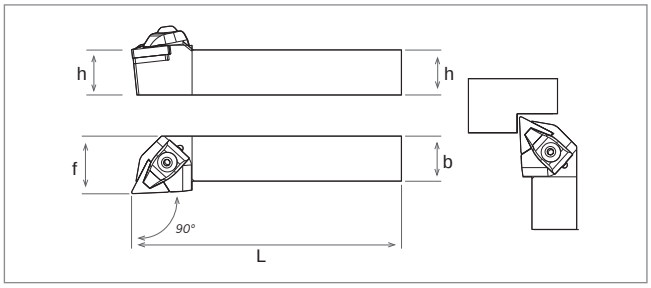

Ordering Code		Item Designation	Dimensions (mm)				Master Insert*
Direction		*TTGNR/L (90)*	*h=H*	*b*	*L*	*f*	
Right	*Left*						
SM44449	SM44456	TTGNR/L 2020 K16	20	20	125	26	TNM.1604..
SM44463	SM44470	TTGNR/L 2525 M16	25	25	150	32	
SM49116	SM49123	TTGNR/L 3232 P16	32	32	170	38	
SM44487	SM44494	TTGNR/L 2525 M22	25	25	150	32	TNM.2204..
SM44500	SM44517	TTGNR/L 3232 P22	32	32	170	38	
SM49130	SM51409	TTGNR/L 4040 S22	40	40	250	48	

Descriptions	Master Insert*	Spare Parts					
		Clamp	*Screw*	*Shim*	*Shim Screw*	*Stamp*	*Allen Key*
2020 - 3232	TNM.1604..	TSK2-9102	TSBV M5x23-9202	BAX TN16-9610	TSAV M4x10x6-9402	-	SAK-AA3-9902
2525 - 4040	TNM.2204..	TSK1-9101	TSBV M6x28-9205	BAX TN22-9611	TSAV M4x10-9403	TSP 6.5x12-9705	

*Suitable Insert is ISO

***Spare Parts Ordering Codes*

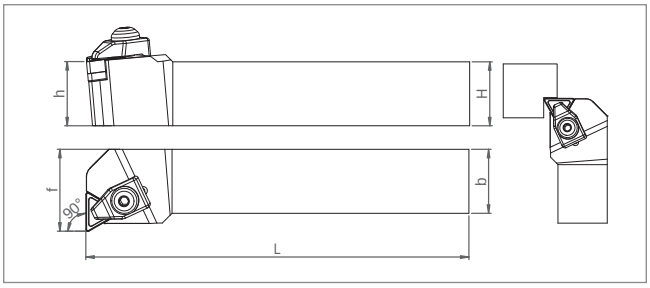

Ordering Code		Item Designation	Dimensions (mm)				Master Insert*
Direction		*TTFNR/L (90)*	*h=H*	*b*	*L*	*f*	
Right	*Left*						
SM44524	SM44531	TTFNR/L 2020 K16	20	20	125	26	TNM.1604..
SM44548	SM44555	TTFNR/L 2525 M16	25	25	150	32	
SM49154	SM49161	TTFNR/L 3232 P16	32	32	170	39	
SM44562	SM44579	TTFNR/L 2525 M22	25	25	150	32	TNM.2204..
SM44586	SM44593	TTFNR/L 3232 P22	32	32	170	39	
SM49178	SM49185	TTFNR/L 4040 S22	40	40	250	48	

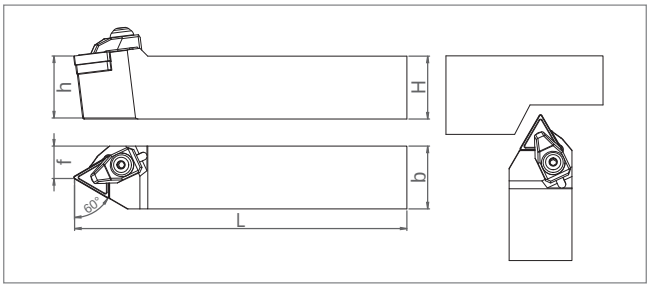

Ordering Code	Item Designation	Dimensions (mm)				Master Insert*
Direction	*TTENN (60)*	*h=H*	*b*	*L*	*f*	
Neutral						
SM00841	TTENN 2020 K16	20	20	125	10	TNM.1604..
SM00872	TTENN 2525 M16	25	25	150	12.5	
SM00902	TTENN 3232 P16	32	32	170	16	
SM00933	TTENN 2525 M22	25	25	150	12.5	TNM.2204..
SM00964	TTENN 3232 P22	32	32	170	16	
SM00995	TTENN 4040 S22	40	40	250	20	

Size Designation	Master Insert*	Spare Parts					
		Clamp	*Screw*	*Shim*	*Shim Screw*	*Stamp*	*Allen Key*
2020 - 3232	TNM.1604..	TSK2-9102	TSBV M5x23-9202	BAX TN6-9610	TSAV M4x10x6-9402	-	SAK-AA3-9902
2525 - 4040	TNM.2204..	TSK1-9101	TSBV M6x28-9205	BAX TN22-9611	TSAV M4x10-9403	TSP 6.5x12-9705	

*Suitable Insert is ISO

**Spare Parts Ordering Codes*

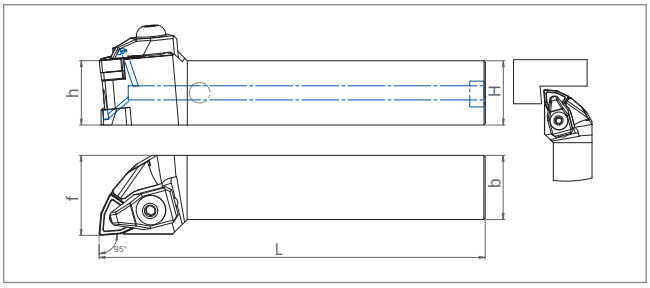

Ordering Code		Description	Dimensions (mm)				Master Insert*
Direction		TWLNR/L-JT (95)	h=H	b	L	f	
Right	Left						
SM56046	SM56053	TWLNR/L 2525 M08-JT	25	25	150	32	WNM.0804..

Cooling accessories are optional / See Page "529" for cooling accessory.
Soğutma ekipmanları opsiyoneldir / Bkz. Sayfa "529" Soğutma aksesuarları için

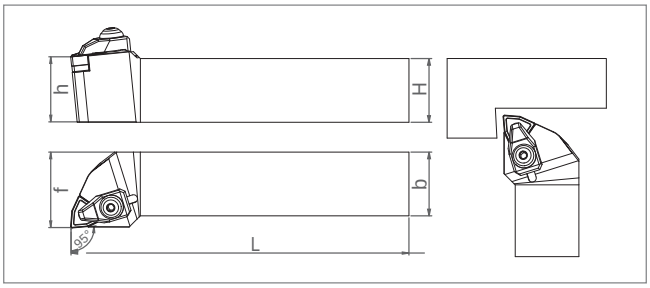

Ordering Code		Item Designation	Dimensions (mm)				Master Insert*
Direction		TWLNR/L (95)	h=H	b	L	f	
Right	Left						
SM01107	SM01114	TWLNR/L 1616 H06	16	16	100	20	WNM.0604..
SM01121	SM01138	TWLNR/L 2020 K06	20	20	125	26	
SM01145	SM01152	TWLNR/L 2525 M06	25	25	150	32	
SM01176	SM01169	TWLNR/L 2020 K08	20	20	125	25	WNM.0804..
SM01206	SM01183	TWLNR/L 2525 M08	25	25	150	32	
SM01213	SM01190	TWLNR/L 3232 P08	32	32	170	38	
SM01220	SM01237	TWLNR/L 4040 S08	40	40	250	48	
SM73746	**SM73753**	**TWLNR/L 5050 S08**	**50**	**50**	**250**	**60**	

Size Designation	Master Insert*	Spare Parts						
		Clamp	Screw	Shim	Shim Screw	Stamp	Plug	Allen Key
1616 - 2525	WNM.0604..	TSK2-9102	TSBV M5x23-9202	BAX WN06-9606	CSAV M3x10-9401	-	-	SAK-AA3-9902
2020 - 5050	WNM.0804..	TSK1-9101	TSBV M6x28-9205	BAX WN08-9607	TSAV M4x10-9403	TSP 6.5x12-9705	-	
2525-JT							SMHT G1/8-AA3 9259	

*Suitable Insert is ISO

**Spare Parts Ordering Codes*

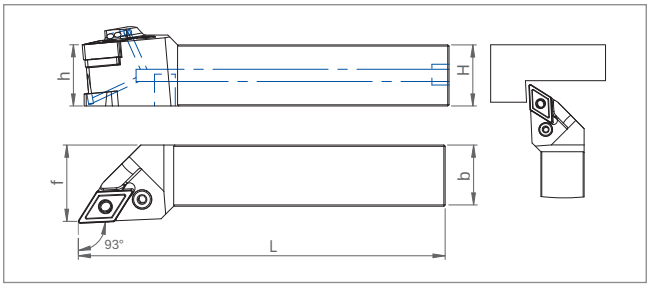

Ordering Code		Description	Dimensions (mm)				Master Insert*
Direction		PDJNR/L-JT (93)	h=H	b	L	f	
Right	Left						
SM73890	**SM73906**	**PDJNR/L 2020 K15-JT**	**20**	**20**	**125**	**26**	DNM.1506..
SM50747	SM50754	PDJNR/L 2525 M15-JT	25	25	150	32	
SM73913	**SM73920**	**PDJNR/L 3232 P15-JT**	**32**	**32**	**170**	**39**	

Cooling accessories are optional / See Page "529" for cooling accessory.
Soğutma ekipmanları opsiyoneldir / Bkz. Sayfa "529" Soğutma aksesuarları için

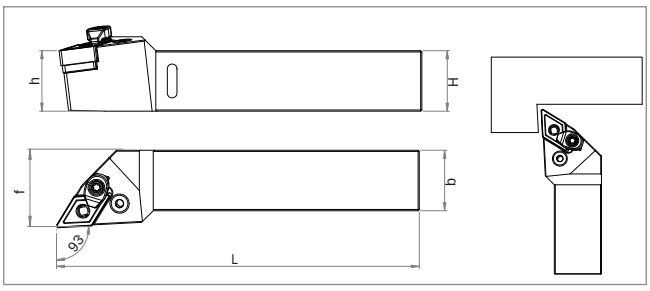

Ordering Code		Item Designation	Dimensions (mm)				Master Insert*
Direction		*PDJNR/L (93)*	*h=H*	*b*	*L*	*f*	
Right	*Left*						
SM01794	SM01800	PDJNR/L 2020 K15	20	20	125	26	DNM.1506..
SM01817	SM01824	PDJNR/L 2525 M15	25	25	150	32	
SM01831	SM01848	PDJNR/L 3232 P15	32	32	170	39	
SM25967	SM25950	PDJNR/L 4040 S15	40	40	250	48	

Size Designation	Master Insert*	Spare Parts								
		Lever	*Lever Screw*	*Allen Key*	*Shim Spring*	*Shim*	*Clamp*	*Clamp Screw*	*Plug*	*Torx Key*
2020	DNM.1506..	SPL4 9123	SLV4 M8x21 9229	SAK-AA3-9902	SLAY1 9701	BAX DN15-9602	PSK2 9126	SSV M3.5x11 9532	-	STK-T15 9910
2525 - 4040										
2525-JT							-	-	SMHT G1/8-AA3 9259	-

*Suitable Insert is ISO
**Spare Parts Ordering Codes*

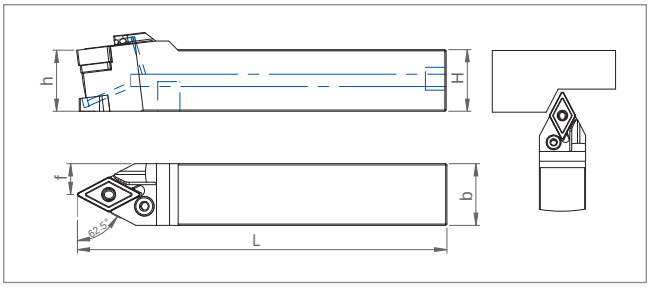

Ordering Code	Item Designation	Dimensions (mm)				Master Insert*
Direction	*PDNNN-JT (62.5)*	*h=H*	*b*	*L*	*f*	
Neutral						
SM50792	PDNNN 2525 M15-JT	25	25	150	12.5	DNM.1506..

Cooling accessories are optional / See Page "529" for cooling accessory.
Soğutma ekipmanları opsiyoneldir / Bkz. Sayfa "529" Soğutma aksesuarları için

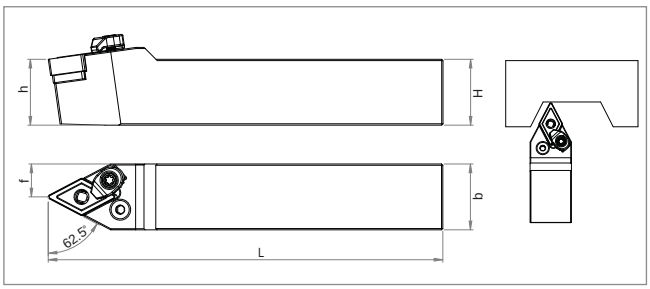

Ordering Code	Item Designation	Dimensions (mm)				Master Insert*
Direction	*PDNNN (62.5)*	*h=H*	*b*	*L*	*f*	
Neutral						
SM25943	PDNNN 2020 K15	20	20	125	10	DNM.1506..
SM22409	PDNNN 2525 M15	25	25	150	12.5	
SM25936	PDNNN 3232 P15	32	32	170	16	
SM34297	PDNNN 4040 S15	40	40	250	20	

Size Designation	Master Insert*	Spare Parts								
		Lever	*Lever Screw*	*Allen Key*	*Shim Spring*	*Shim*	*Clamp*	*Clamp Screw*	*Plug*	*Torx Key*
2020	DNM.1506..	SPL4 9123	SLV4 M8x21 9229	SAK-AA3-9902	SLAY1 9701	BAX DN15-9602	PSK2 9126	SSV M3.5x11 9532	-	STK-T15 9910
2525 - 4040										
2525-JT							-	-	SMHT G1/8-AA3 9259	

*Suitable Insert is ISO

**Spare Parts Ordering Codes*

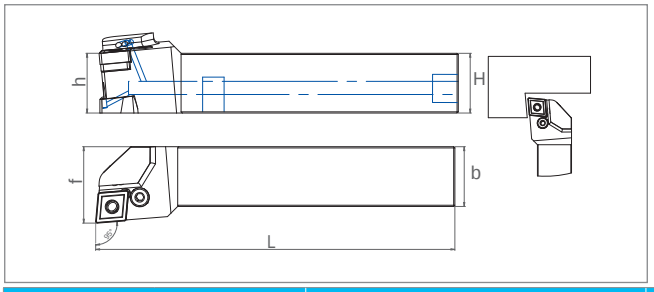

Ordering Code		Description	Dimensions (mm)				Master Insert*
Direction		PCLNR/L-JT (95)	h=H	b	L	f	
Right	Left						
SM73975	SM73982	PCLNR/L 2020 K12-JT	20	20	125	26	CNM.1204..
SM50846	SM50853	PCLNR/L 2525 M12-JT	25	25	150	32	
SM73999	SM74002	PCLNR/L 3232 M12-JT	32	32	170	39	
SM50884	SM50891	PCLNR/L 2525 M16-JT	25	25	150	32	CNM.1606..

Cooling accessories are optional / See Page "529" for cooling accessory.
Soğutma ekipmanları opsiyoneldir / Bkz. Sayfa "529" Soğutma aksesuarları için

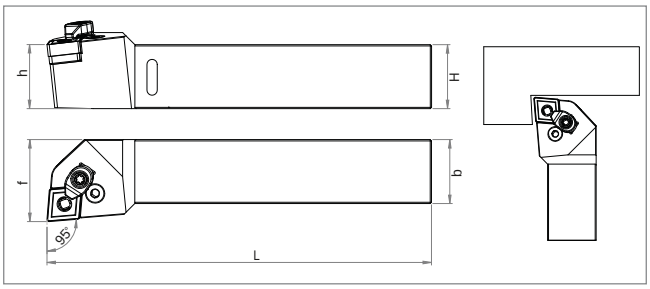

Ordering Code		Item Designation	Dimensions (mm)				Master Insert*
Direction		PCLNR/L (95)	h=H	b	L	f	
Right	Left						
SM01619	SM01626	PCLNR/L 2020 K12	20	20	125	26	CNM.1204..
SM01640	SM01657	PCLNR/L 2525 M12	25	25	150	32	
SM01671	SM01688	PCLNR/L 3232 P12	32	32	170	39	
SM01701	SM01718	PCLNR/L 2525 M16	25	25	150	32	CNM.1606..
SM01732	SM01749	PCLNR/L 3232 P16	32	32	170	39	
SM01763	SM01770	PCLNR/L 3232 P19	32	32	170	40	CNM.1906..
SM25905	SM25899	PCLNR/L 4040 S19	40	40	250	49	

Size Designation	Master Insert*	Spare Parts								
		Lever	Lever Screw	Allen Key	Shim Spring	Shim	Clamp	Clamp Screw	Plug	Torx Key
2020	CNM.1204..	SPL1-9120	SLV1 M8x20-9224	SAK-AA3-9902	SLAY1-9701	BAX CN12-9603	PSK2 9126	SSV M3.5x11 9532	-	STK-T15 9910
2525 - 3232										
2020 - 3232-JT							-	-	SMHT G1/8-AA3 9259	-
2525 - 3232	CNM.1606..	SPL2-9121	SLV2 M8x24-9225		SLAY2-9702	BAX CN16-9604	PSK2 9126	SSV M3.5x11 9532	-	STK-T15 9910
2525-JT							-	-	SMHT G1/8-AA3 9259	-
3232 - 4040	CNM.1906..	SPL3-9122	SLV3 M10x29-9226	SAK-AA4-9903	SLAY3-9703	BAX CN19-9605	PSK3 9127	SSV M6x16 9520		STK-T20 9911

*Suitable Insert is ISO
**Spare Parts Ordering Codes

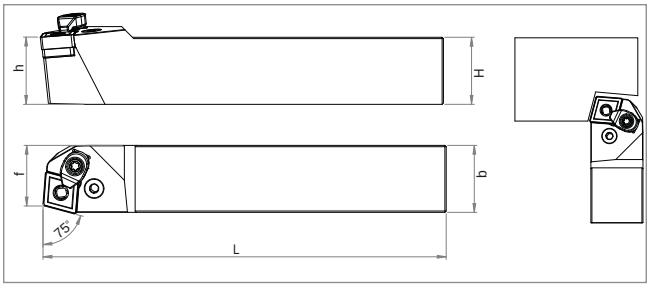

Ordering Code		Item Designation	Dimensions (mm)				Master Insert*
Direction		*PCBNR/L (75)*	*h=H*	*b*	*L*	*f*	
Right	*Left*						
SM34204	SM34198	PCBNR/L 2020 K12	20	20	125	17.5	CNM.1204..
SM22447	SM22454	PCBNR/L 2525 M12	25	25	150	23	
SM25868	SM25851	PCBNR/L 3232 P12	32	32	170	28.5	
SM34211	SM34228	PCBNR/L 2525 M16	25	25	150	22.5	CNM.1606..
SM34235	SM34242	PCBNR/L 3232 P16	32	32	170	28.5	
SM34266	SM34259	PCBNR/L 3232 P19	32	32	170	28	CNM.1906..
SM34273	SM34280	PCBNR/L 4040 S19	40	40	250	36	

Size Designation	Master Insert*	Spare Parts							
		Lever	*Lever Screw*	*Allen Key*	*Shim Spring*	*Shim*	*Clamp*	*Clamp Screw*	*Torx Key*
2020	CNM.1204..	SPL1-9120	SLV1 M8x20-9224	SAK-AA3-9902	SLAY1-9701	BAX CN12-9603	PSK4 9128	SSV M3.5x11 9532	STK-T15 9910
2525 - 3232							PSK2 9126		
2525 - 3232	CNM.1606..	SPL2-9121	SLV2 M8x24-9225		SLAY2-9702	BAX CN16-9604			
3232 - 4040	CNM.1906..	SPL3-9122	SLV3 M10x29-9226	SAK-AA4-9903	SLAY3-9703	BAX CN19-9605	PSK3 9127	SSV M6x16 9520	STK-T20 9911

*Suitable Insert is ISO

***Spare Parts Ordering Codes*

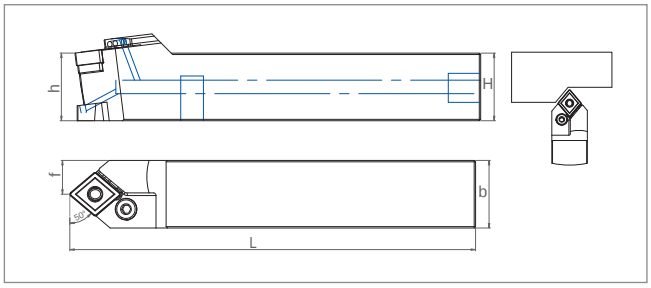

Ordering Code	Item Designation	Dimensions (mm)				Master Insert*
Direction / *Neutral*	*PCMNN-JT (50)*	*h=H*	*b*	*L*	*f*	
SM50969	PCMNN 2525 M12-JT	25	25	150	12.5	CNM.1204..
SM50983	PCMNN 2525 M16-JT	25	25	150	12.5	CNM.1606..

Cooling accessories are optional / See Page "529" for cooling accessory.
Soğutma ekipmanları opsiyoneldir / Bkz. Sayfa "529" Soğutma aksesuarları için

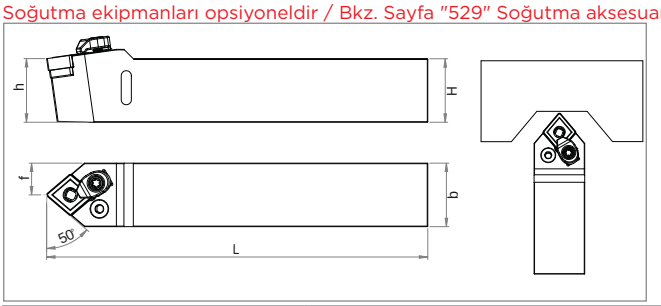

Ordering Code	Item Designation	Dimensions (mm)				Master Insert*
Direction / *Neutral*	*PCMNN (50)*	*h=H*	*b*	*L*	*f*	
SM01633	PCMNN 2020 K12	20	20	125	10	CNM.1204..
SM01664	PCMNN 2525 M12	25	25	150	12.5	
SM01695	PCMNN 3232 P12	32	32	170	16	
SM01725	PCMNN 2525 M16	25	25	150	12.5	CNM.1606..
SM01756	PCMNN 3232 P16	32	32	170	16	
SM01787	PCMNN 3232 P19	32	32	170	16	CNM.1906..
SM34129	PCMNN 4040 S19	40	40	250	20	

Size Designation	Master Insert*	Spare Parts								
		Lever	*Lever Screw*	*Allen Key*	*Shim Spring*	*Shim*	*Clamp*	*Clamp Screw*	*Plug*	*Torx Key*
2020	CNM.1204..	SPL1-9120	SLV1 M8x20-9224	SAK-AA3-9902	SLAY1-9701	BAX CN12-9603	PSK2 9126	SSV M3.5x11 9532	-	STK-T15 9910
2525 - 3232										
2020 - 3232-JT							-	-	SMHT G1/8-AA3 9259	-
2525 - 3232	CNM.1606..	SPL2-9121	SLV2 M8x24-9225		SLAY2-9702	BAX CN16-9604	PSK2 9126	SSV M3.5x11 9532	-	STK-T15 9910
2525-JT							-	-	SMHT G1/8-AA3 9259	-
3232 - 4040	CNM.1906..	SPL3-9122	SLV3 M10x29-9226	SAK-AA4-9903	SLAY3-9703	BAX CN19-9605	PSK3 9127	SSV M6x16 9520		STK-T20 9911

*Suitable Insert is ISO
***Spare Parts Ordering Codes*

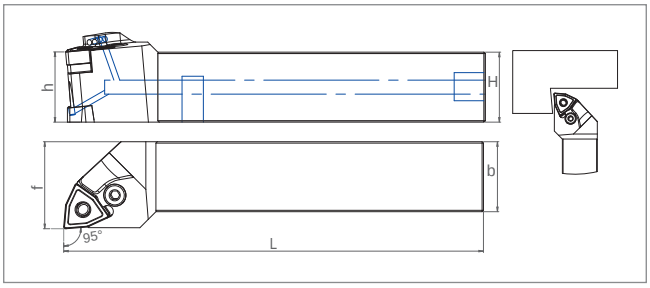

Ordering Code		Description	Dimensions (mm)				Master Insert*
Direction		PWLNR/L-JT (95)	h=H	b	L	f	
Right	Left						
NEW **SM73937**	**SM73944**	**PWLNR/L 2020 K08-JT**	**20**	**20**	**125**	**26**	WNM.0804..
SM50525	SM50518	PWLNR/L 2525 M08-JT	25	25	150	32	
NEW **SM73951**	**SM73968**	**PWLNR/L 3232 P08-JT**	**32**	**32**	**170**	**38**	

Cooling accessories are optional / See Page "529" for cooling accessory.
Soğutma ekipmanları opsiyoneldir / Bkz. Sayfa "529" Soğutma aksesuarları için

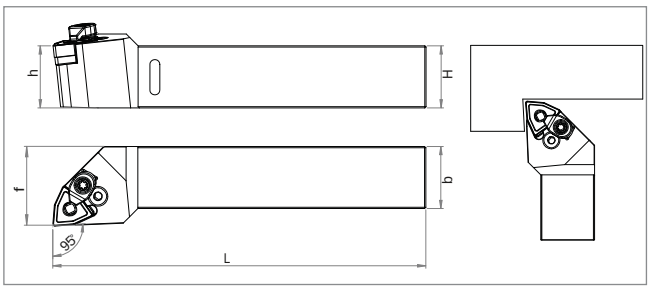

Ordering Code		Item Designation	Dimensions (mm)				Master Insert*
Direction		PWLNR/L (95)	h=H	b	L	f	
Right	Left						
SM01985	SM01992	PWLNR/L 2020 K08	20	20	125	26	WNM.0804..
SM02005	SM02012	PWLNR/L 2525 M08	25	25	150	32	
SM02029	SM02036	PWLNR/L 3232 P08	32	32	170	38	
SM25929	SM25912	PWLNR/L 4040 S08	40	40	250	48	

Size Designation	Master Insert*	Spare Parts								
		Lever	Lever Screw	Allen Key	Shim Spring	Shim	Clamp	Clamp Screw	Plug	Torx Key
2020 - 3232	WNM.0804..	SPL1-9120	SLV1 M8x18-9249	SAK-AA3-9902	SLAY1-9701	BAX WN08-9607	PSK2 9126	SSV M3.5x11 9532	-	STK-T15 9910
4040			SLV1 M8x20-9224							
2525-JT							-	-	SMHT G1/8-AA3 9259	-

*Suitable Insert is ISO

**Spare Parts Ordering Codes*

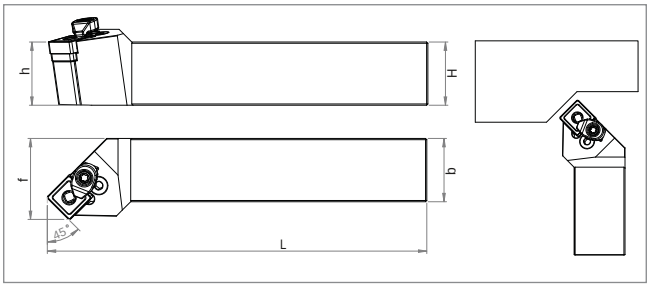

Ordering Code		Item Designation	Dimensions (mm)				Master Insert*
Direction		*PSSNR/L (45)*	*h=H*	*b*	*L*	*f*	
Right	*Left*						
SM01855	SM01862	PSSNR/L 2020 K12	20	20	125	26	SNM.1204..
SM01886	SM01893	PSSNR/L 2525 M12	25	25	150	32	
SM01916	SM01923	PSSNR/L 3232 P12	32	32	170	38	
SM49215	SM49222	PSSNR/L 2525 M15	25	25	150	32	SNM.1506..
SM01954	SM01961	PSSNR/L 3232 P15	32	32	170	38	
SM34136	SM34143	PSSNR/L 3232 P19	32	32	170	38	SNM.1906
SM34150	SM34167	PSSNR/L 4040 S19	40	40	250	48	

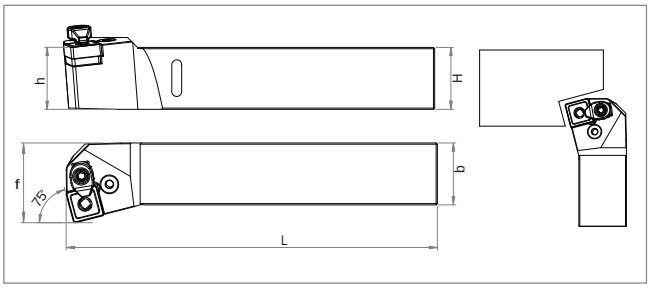

Ordering Code		Item Designation	Dimensions (mm)				Master Insert*
Direction		*PSKNR/L (75)*	*h=H*	*b*	*L*	*f*	
Right	*Left*						
SM26025	SM26018	PSKNR/L 2020 K12	20	20	125	26	SNM.1204..
SM22386	SM22393	PSKNR/L 2525 M12	25	25	150	32	
SM26001	SM25998	PSKNR/L 3232 P12	32	32	170	38	
SM22461	SM22478	PSKNR/L 2525 M15	25	25	150	32	SNM.1506..
SM25981	SM25974	PSKNR/L 3232 P15	32	32	170	38	
SM37564	SM37557	PSKNR/L 3232 P19	32	32	170	38	SNM.1906
SM37571	SM37540	PSKNR/L 4040 S19	40	40	250	47	

Size Designation	Master Insert*	Spare Parts							
		Lever	*Lever Screw*	*Allen Key*	*Shim Spring*	*Shim*	*Clamp*	*Clamp Screw*	*Torx Key*
2020	SNM.1204..	SPL1-9120	SLV1 M8x20-9224	SAK-AA3-9902	SLAY1-9701	BAX SN12-9608	PSK2 9126	SSV M3.5x11 9532	STK-T15 9910
2525 - 3232									
2525 - 3232	SNM.1506..	SPL2-9121	SLV2 M8x24-9225		SLAY2-9702	BAX SN15-9609			
3232 - 4040	SNM.1906	SPL3-9122	SLV3 M10x29-9226	SAK-AA4-9903	SLAY3-9703	BAX SN19-9629	PSK3 9127	SSV M6x16 9520	STK-T20 9911

*Suitable Insert is ISO
***Spare Parts Ordering Codes*

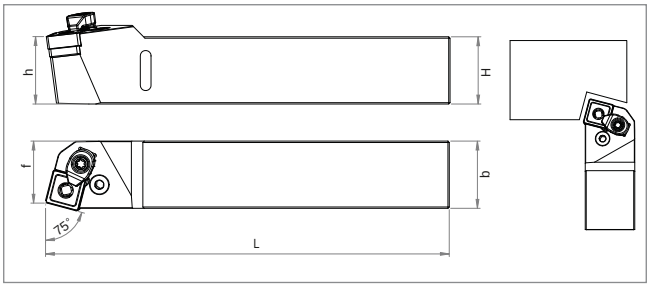

Ordering Code		Item Designation	Dimensions (mm)				Master Insert*
Direction		*PSBNR/L (75)*	*h=H*	*b*	*L*	*f*	
Right	*Left*						
SM34303	SM34310	PSBNR/L 2020 K12	20	20	125	17	SNM.1204..
SM22423	SM22430	PSBNR/L 2525 M12	25	25	150	23	
SM25882	SM25875	PSBNR/L 3232 P12	32	32	170	28.5	
SM34327	SM34334	PSBNR/L 2525 M15	25	25	150	22	SNM.1506..
SM34341	SM34358	PSBNR/L 3232 P15	32	32	170	28.5	
SM34365	SM34372	PSBNR/L 3232 P19	32	32	170	28.5	SNM.1906
SM34396	SM34389	PSBNR/L 4040 S19	40	40	250	36	

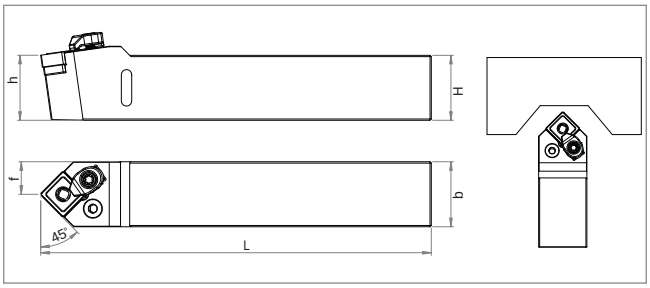

Ordering Code	Item Designation	Dimensions (mm)				Master Insert*
Direction	*PSDNN (45)*	*h=H*	*b*	*L*	*f*	
Neutral						
SM01879	PSDNN 2020 K12	20	20	125	10	SNM.1204..
SM01909	PSDNN 2525 M12	25	25	150	12.5	
SM01930	PSDNN 3232 P12	32	32	170	16	
SM01947	PSDNN 2525 M15	25	25	150	12.5	SNM.1506..
SM01978	PSDNN 3232 P15	32	32	170	16	
SM34174	PSDNN 3232 P19	32	32	170	16	SNM.1906
SM34181	PSDNN 4040 S19	40	40	250	20	

Size Designation	Master Insert*	Spare Parts							
		Lever	*Lever Screw*	*Allen Key*	*Shim Spring*	*Shim*	*Clamp*	*Clamp Screw*	*Torx Key*
2020	SNM.1204..	SPL1-9120	SLV1 M8x20-9224	SAK-AA3-9902	SLAY1-9701	BAX SN12-9608	PSK4 9128	SSV M3.5x11 9532	STK-T15 9910
2525 - 3232							PSK2 9126		
2525 - 3232	SNM.1506..	SPL2-9121	SLV2 M8x24-9225		SLAY2-9702	BAX SN15-9609			
3232 - 4040	SNM.1906	SPL3-9122	SLV3 M10x29-9226	SAK-AA4-9903	SLAY3-9703	BAX SN19-9629	PSK3 9127	SSV M6x16 9520	STK-T20 9911

*Suitable Insert is ISO
**Spare Parts Ordering Codes*

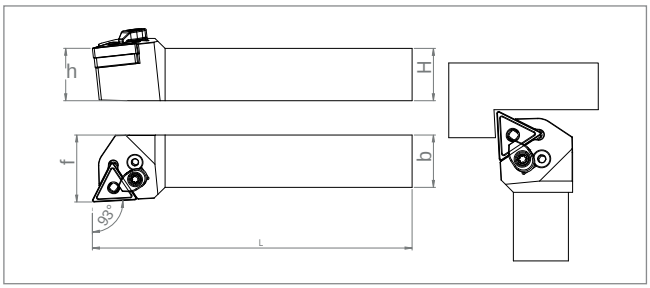

Ordering Code		Item Designation	Dimensions (mm)				Master Insert*
Direction		*PTJNR/L (93)*	*h=H*	*b*	*L*	*f*	
Right	*Left*						
SM74019	SM74026	PTJNR/L 2525 M22	25	25	150	32	TNM.2204..
SM74033	SM74040	PTJNR/L 3232 P22	32	32	170	38	

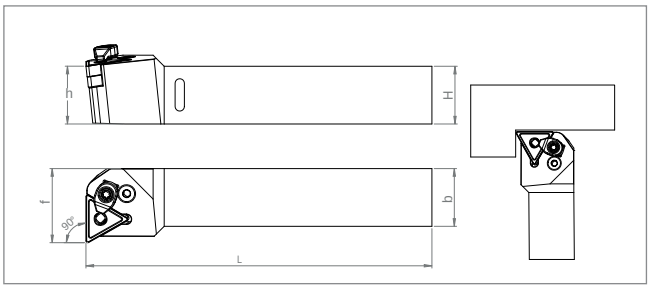

Ordering Code		Item Designation	Dimensions (mm)				Master Insert*
Direction		*PTFNR/L (90)*	*h=H*	*b*	*L*	*f*	
Right	*Left*						
SM74057	SM74064	PTFNR/L 2525 M22	25	25	150	32	TNM.2204..
SM74071	SM74088	PTFNR/L 3232 P22	32	32	170	38	

Size Designation	Master Insert*	Spare Parts							
		Lever	*Lever Screw*	*Allen Key*	*Shim Spring*	*Shim*	*Clamp*	*Clamp Screw*	*Torx Key*
2525 - 3232	TNM.2204..	SPL4-9123	SLV4 M8x21 9229	SAK-AA3-9902	SLAY1 9701	BAX TN22-9611	PSK2 9126	SSV M3.5x11 9532	STK-T15 9910

*Suitable Insert is ISO
***Spare Parts Ordering Codes*

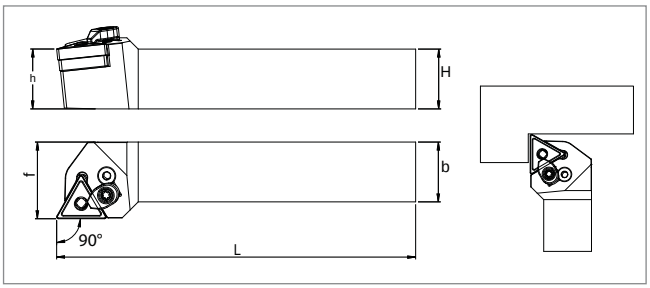

Ordering Code		Item Designation	Dimensions (mm)				Master Insert*
Direction		*PTGNR/L (90)*	*h=H*	*b*	*L*	*f*	
Right	*Left*						
SM74095	SM74101	PTGNR/L 2525 M22	25	25	150	32	TNM.2204..
SM74118	SM74125	PTGNR/L 3232 P22	32	32	170	38	

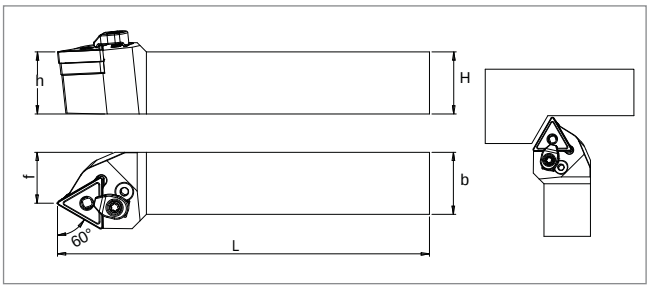

Ordering Code		Item Designation	Dimensions (mm)				Master Insert*
Direction		*PTTNR/L (60)*	*h=H*	*b*	*L*	*f*	
Right	*Left*						
SM74132	SM74149	PTTNR/L 2525 M22	25	25	150	20.5	TNM.2204..
SM74156	SM74163	PTTNR/L 3232 P22	32	32	170	29	

Size Designation	Master Insert*	Spare Parts							
		Lever	*Lever Screw*	*Allen Key*	*Shim Spring*	*Shim*	*Clamp*	*Clamp Screw*	*Torx Key*
2525 - 3232	TNM.2204..	SPL4-9123	SLV4 M8x21 9229	SAK-AA3-9902	SLAY1 9701	BAX TN22-9611	PSK2 9126	SSV M3.5x11 9532	STK-T15 9910

*Suitable Insert is ISO
***Spare Parts Ordering Codes*

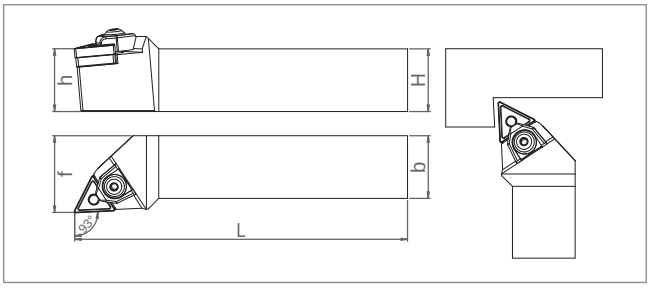

Ordering Code		Item Designation	Dimensions (mm)				Master Insert*
Direction		*MTJNR/L (93)*	*h=H*	*b*	*L*	*f*	
Right	*Left*						
SM01268	SM01329	MTJNR/L 2020 K16	20	20	125	26	TNM.1604..
SM01275	SM01282	MTJNR/L 2525 M16	25	25	150	32	
SM01305	SM01312	MTJNR/L 3232 P16	32	32	170	38	
SM01398	SM01374	MTJNR/L 2525 M22	25	25	150	32	TNM.2204..
SM01404	SM01381	MTJNR/L 3232 P22	32	32	170	39	
SM01336	SM01350	MTJNR/L 4040 S22	40	40	250	48	
NEW **SM73807**	**SM73814**	**MTJNR/L 5050 S22**	**50**	**50**	**250**	**60**	

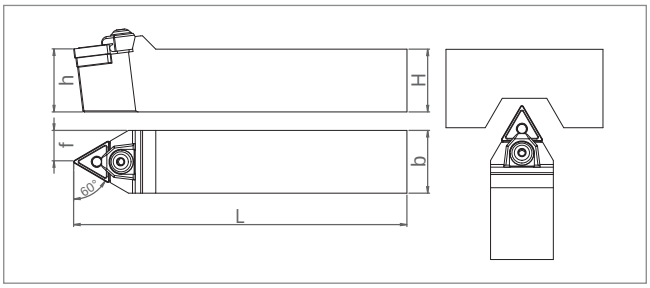

Ordering Code	Item Designation	Dimensions (mm)				Master Insert*
Direction	*MTENN (60)*	*h=H*	*b*	*L*	*f*	
Neutral						
SM01251	MTENN 2020 K16	20	20	125	10	TNM.1604..
SM01299	MTENN 2525 M16	25	25	150	12.5	
SM01244	MTENN 3232 P16	32	32	170	16	
SM01367	MTENN 2525 M22	25	25	150	12.5	TNM.2204..
SM01411	MTENN 3232 P22	32	32	170	16	
SM01343	MTENN 4040 S22	40	40	250	20	

Size Designation	Master Insert*	Spare Parts				
		Clamp	Screw	Shim	Pin	Allen Key
2020	TNM.1604..	MSK1-9107	TSBV M6x26-9203	BAX TN16-9610	BMP1 3.70x5x17 9309	SAK-AA3-9902
2525 - 3232			TSBV M6x28-9205			
2525 - 5050	TNM.2204..			BAX TN22-9611	BMP2 5x6x16-9310	

*Suitable Insert is ISO

**Spare Parts Ordering Codes*

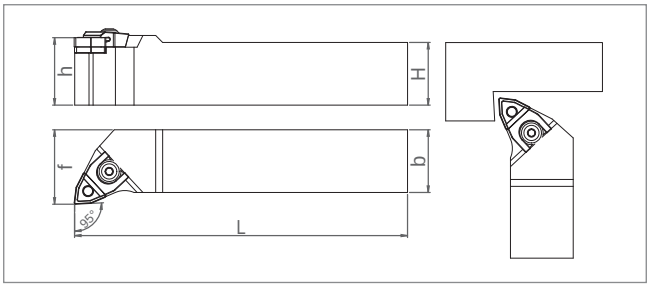

Ordering Code		Item Designation	Dimensions (mm)				Master Insert*
Direction		*MWLNR/L (95)*	*h=H*	*b*	*L*	*f*	
Right	*Left*						
SM01428	SM01435	MWLNR/L 1616 H06	16	16	100	20	WNM.0604..
SM01459	SM01466	MWLNR/L 2020 K06	20	20	125	26	
SM01473	SM01480	MWLNR/L 2525 M06	25	25	150	32	
SM01534	SM01497	MWLNR/L 2020 K08	20	20	125	26	WNM.0804..
SM01558	SM01572	MWLNR/L 2525 M08	25	25	150	32	
SM01602	SM01589	MWLNR/L 3232 P08	32	32	170	38	
SM01527	SM25776	MWLNR/L 4040 S08	40	40	250	48	
SM73821	**SM73838**	**MWLNR/L 5050 S08**	**50**	**50**	**250**	**60**	

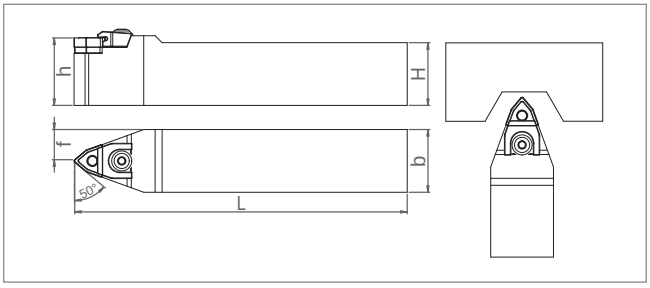

Ordering Code	Item Designation	Dimensions (mm)				Master Insert*
Direction	*MWDNN (50)*	*h=H*	*b*	*L*	*f*	
Neutral						
SM01442	MWDNN 1616 H06	16	16	100	8	WNM.0604..
SM01503	MWDNN 2020 K06	20	20	125	10	
SM01510	MWDNN 2525 M06	25	25	150	12.5	
SM01541	MWDNN 2020 K08	20	20	125	10	WNM.0804..
SM01565	MWDNN 2525 M08	25	25	150	12.5	
SM01596	MWDNN 3232 P08	32	32	170	16	
SM25769	MWDNN 4040 S08	40	40	250	20	

Size Designation	Master Insert*	Spare Parts					
		Clamp	Screw	Shim	Pin	Spring	Allen Key
1616	WNM.0604..	MSK4-9110	TSBV M5x18-9201	BAX WN06-9606	BMP8 3.70x5x14 9318	SAK-AA3-9902	
2020 - 2525							
2020	WNM.0804..	MSK3-9109	TSBV M6x26 9203	BAX WN08 9607	BMP6 5x6x14 9316		
2525 - 5050			TSBV M6x28 9205				

*Suitable Insert is ISO

**Spare Parts Ordering Codes*

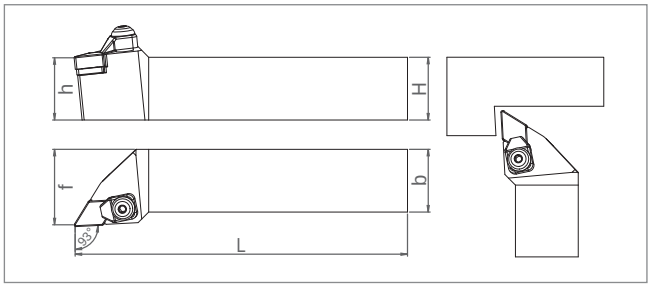

Ordering Code		Item Designation	Dimensions (mm)				Master Insert*
Direction		CDJNR/L (93)	h=H	b	L	f	
Right	Left						
SM02043	SM02050	CDJNR/L 2525 M15	25	25	150	32	DN.N 1507..
SM02067	SM02074	CDJNR/L 3232 P15	32	32	170	39	

Size Designation	Master Insert*	Spare Parts					
		Wedge Clamp	Clamp Screw	Shim	Shim Screw	Ring	Allen Key
2525 - 3232	DN.N 1507..	CSK5 9115	CSBV M8x29x11 9208	BAX DN15 9602	TSAV M4x10 9403	CSS1	SAK-AA4-9903

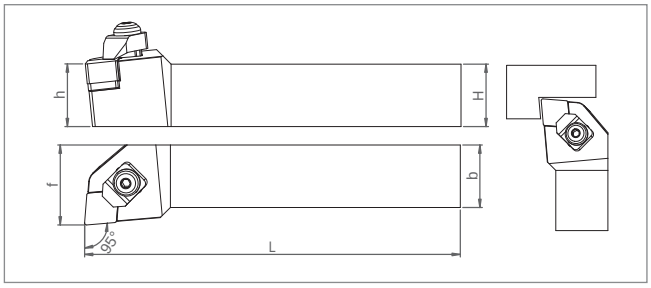

Ordering Code		Item Designation	Dimensions (mm)				Master Insert*
Direction		CCLNR/L (95)	h=H	b	L	f	
Right	Left						
SM44807	SM44814	CCLNR/L 2525 M12	25	25	150	32	CN.N 1207.
SM44821	SM44838	CCLNR/L 3232 P12	32	32	170	39	

Size Designation	Master Insert*	Spare Parts					
		Wedge Clamp	Clamp Screw	Shim	Shim Screw	Ring	Allen Key
2525 - 3232	CN.N 1207.	CSK5 9115	CSBV M8x29x11 9208	BAX CN12 9603	TSAV M4x10 9403	CSS1	SAK-AA4-9903

*Suitable Insert is ISO

**Spare Parts Ordering Codes*

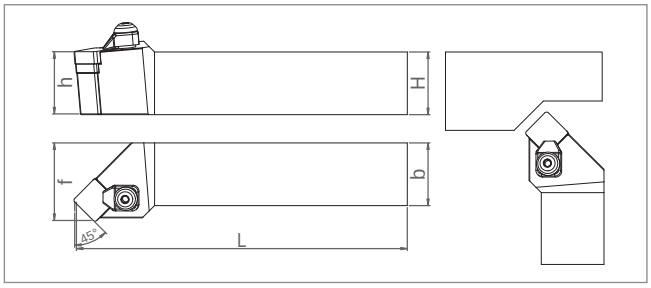

Ordering Code		Item Designation	Dimensions (mm)				Master Insert*
Direction		*CSSNR/L (45)*	*h=H*	*b*	*L*	*f*	
Right	*Left*						
SM02142	SM02159	CSSNR/L 2525 M12	25	25	150	32	SN.N 1207..
SM02173	SM02180	CSSNR/L 3232 P12	32	32	170	38	

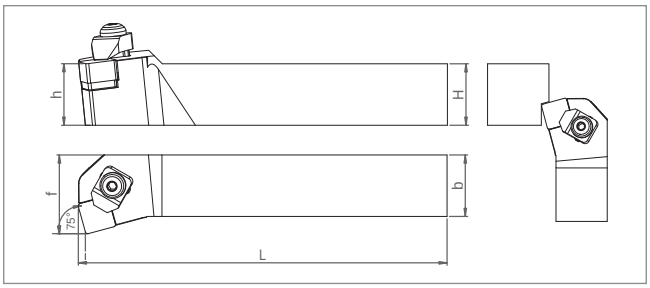

Ordering Code		Item Designation	Dimensions (mm)				Master Insert*
Direction		*CSKNR/L (75)*	*h=H*	*b*	*L*	*f*	
Right	*Left*						
SM44845	SM44852	CSKNR/L 2525 M12	25	25	150	32	SN.N 1207..
SM44869	SM44876	CSKNR/L 3232 P12	32	32	170	38	

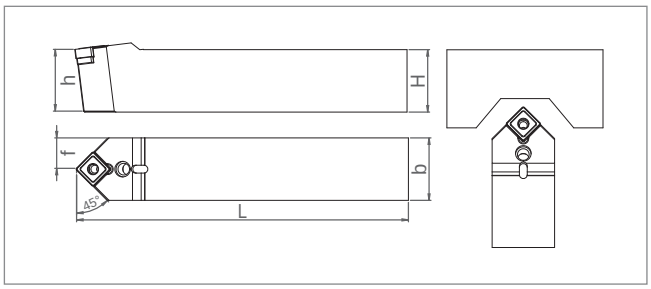

Ordering Code	Item Designation	Dimensions (mm)				Master Insert*
Direction	*CSDNN (45)*	*h=H*	*b*	*L*	*f*	
Neutral						
SM02166	CSDNN 2525 M12	25	25	150	12.5	SN.N 1207..
SM02197	CSDNN 3232 P12	32	32	170	16	

Size Designation	Master Insert*	Spare Parts					
		Wedge Clamp	Clamp Screw	Shim	Shim Screw	Ring	Allen Key
2525 - 3232	SN.N 1207..	CSK5 9115	CSBV M8x29x11 9208	BAX SN12 9608	TSAV M4x10 9403	CSS1	SAK-AA4-9903

*Suitable Insert is ISO

**Spare Parts Ordering Codes*

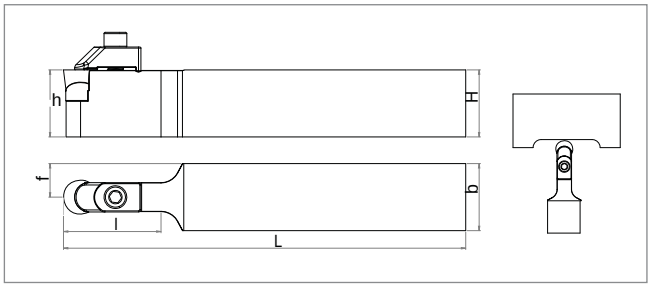

Ordering Code	Item Designation	Dimensions (mm)					Master Insert*
Direction	*CRDCN (-)*	*h=H*	*b*	*L*	*f*	*l*	
Neutral							
SM76679	CRDCN 2020 K06	20	20	125	10	19.50	RCGX 0606..
SM76693	CRDCN 2525 M06	25	25	150	12.5	19.50	
SM76709	CRDCN 3225 P06	32	25	170	12.5	19.50	
SM76686	CRDCN 2020 K09	20	20	125	10	19.50	RCGX 0907..
SM76716	CRDCN 2525 M09	25	25	150	12.5	29	
SM76723	CRDCN 3225 P09	32	25	170	12.5	29	
SM76730	CRDCN 2525 M12	25	25	150	12.5	38.50	RCGX 1207..
SM76747	CRDCN 3225 P12	32	25	170	12.5	38.50	

Size Designation	Master Insert*	Spare Parts				
		Wedge Clamp	Clamp Screw	Shim	Shim Screw	Allen Key
2020 - 3232	RCGX 0606..	CCK 0106 9129	BKTV M3x19 9548	BAX RC06 9632	SSV M2.2x5 9503	SAK-AA2.5 9912
2020 - 3232	RCGX 0904..	CCK 0209 9130	BKTV M5x21 9547	BAX RC09 9633	SSV M2.5x7 9506	SAK-AA4 9903
2525 - 3232	RCGX 1207..	CCK 0312 9131	BKTV M6x25 9233	BAX RC12 9634		SAK-AA5 9904

*Suitable Insert is ISO

**Spare Parts Ordering Codes*

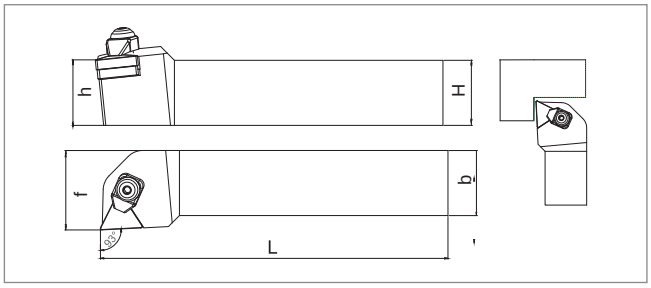

Ordering Code		Item Designation	Dimensions (mm)				Master Insert*
Direction		CTJNR/L (93)	h=H	b	L	f	
Right	Left						
SM02203	SM02210	CTJNR/L 2525 M16	25	25	150	32	TN.N 1607.
SM02227	SM02234	CTJNR/L 3232 P16	32	32	170	38	

Size Designation	Master Insert*	Spare Parts					
		Wedge Clamp	Clamp Screw	Shim	Shim Screw	Ring	Allen Key
2525 - 3232	TN.N 1607.	CSK4-9114	CSBV M8x29x11 9208	BAX TN16 9610	TSAV M4x10x7-9413	CSS1	SAK-AA4-9903

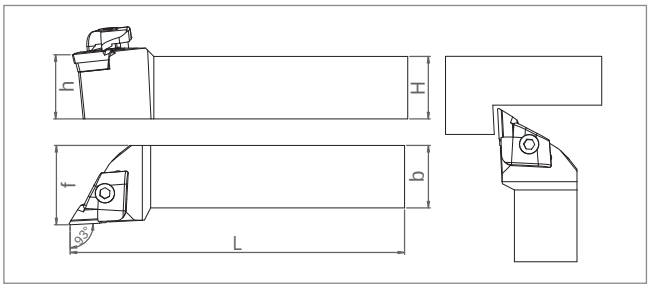

Ordering Code		Item Designation	Dimensions (mm)				Master Insert*
Direction		CKJNR/L (93)	h=H	b	L	f	
Right	Left						
SM02081	SM02128	CKJNR/L 2020 K16	20	20	125	25	KNUX-R/L 1604..
SM02098	SM02104	CKJNR/L 2525 M16	25	25	150	31	
SM02111	SM02135	CKJNR/L 3232 P16	32	32	170	39	
SM24663	SM25363	CKJNR/L 4040 S16	40	40	250	48	

Size Designation	Master Insert*	Spare Parts				
		Wedge Clamp	Clamp Screw	Shim	Shim Screw	Allen Key
2020	KNUX-R/L 1604..	CSK3/R-9117 CSK3/L-9118	BKTV M6x25-9233	BAXKN16/R-9621 BAXKN16/L-9622	CSAV M3x10 9401	SAK-AA5-9904
2525 - 4040		CSK/R-9112 CSK/L-9113	CSBV1 M6x25-9223			

*Suitable Insert is ISO

**Spare Parts Ordering Codes*

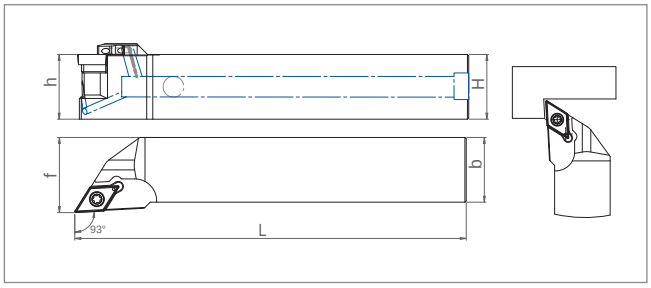

Ordering Code		Description	Dimensions (mm)				Master Insert*
Direction		SDJCR/L-JT (93)	h=H	b	L	f	
Right	Left						
NEW SM79144	SM79151	SDJCR/L 2020 K11-JT	20	20	125	24	DCM. 11T3..
SM57890	SM57906	SDJCR/L 2525 M11-JT	25	25	150	29	

Cooling accessories are optional / See Page "529" for cooling accessory.
Soğutma ekipmanları opsiyoneldir / Bkz. Sayfa "529" Soğutma aksesuarları için

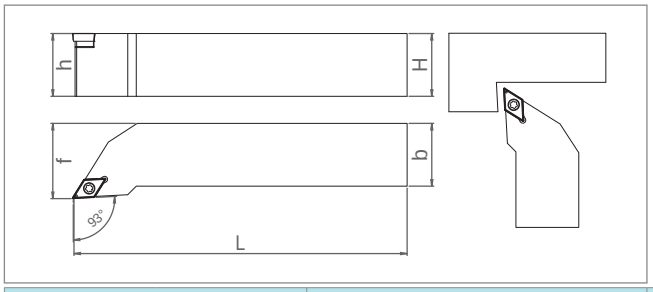

Ordering Code		Item Designation	Dimensions (mm)				Master Insert*
Direction		SDJCR/L (93)	h=H	b	L	f	
Right	Left						
SM02678	SM02685	SDJCR/L 0808 E07	8	8	70	10	DCM. 0702..
SM02623	SM02630	SDJCR/L 1010 E07	10	10	70	12	
SM02562	SM02609	SDJCR/L 1212 F07	12	12	80	15	
SM02579	SM02593	SDJCR/L 1616 H07	16	16	100	20	
SM38745	SM38738	SDJCR/L 1212 F11	12	12	80	15	DCM. 11T3..
SM02760	SM02777	SDJCR/L 1616 H11	16	16	100	20	
SM02791	SM02784	SDJCR/L 2020 K11	20	20	125	24	
SM02821	SM02838	SDJCR/L 2525 M11	25	25	150	29	
SM02883	SM02869	SDJCR/L 3232 P11	32	32	170	38	

Size Designation	Master Insert*	Spare Parts					
	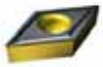	Screw	Shim 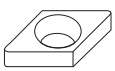	Shim Screw	Torx Key	Plug	Allen Key
0808 - 1616	DCM. 0702..	SSV M2.5x6-9505	-	-	STK-T08-9908	-	-
1212	DCM. 11T3..	SSV M3.5x10-9511	BAX DC11-9613	SBV5 M5x0.5 A3.5x9-9408	STK-T15-9910		
1616		SSV M3.5x12-9526					
2020 - 3232		SSV M3.5x14-9512		SBV M5.05 A3.5x11-9407			
2020 - 2525-JT		SSV M3.5x10-9511		SBV5 M5x0.5 A3.5x9-9408		SMHT G1/8-AA3 9259	SAK-AA3-9902

*Suitable Insert is ISO
**Spare Parts Ordering Codes

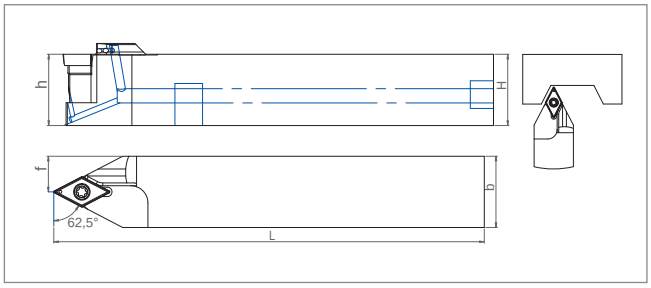

Ordering Code	Item Designation	Dimensions (mm)				Master Insert*
Direction	*SDNCN-JT (62.5)*	*h=H*	*b*	*L*	*f*	
Neutral						
SM57913	SDNCN 2525 M11-JT	25	25	150	12.5	DCM. 11T3..

Cooling accessories are optional / See Page "529" for cooling accessory.
Soğutma ekipmanları opsiyoneldir / Bkz. Sayfa "529" Soğutma aksesuarları için

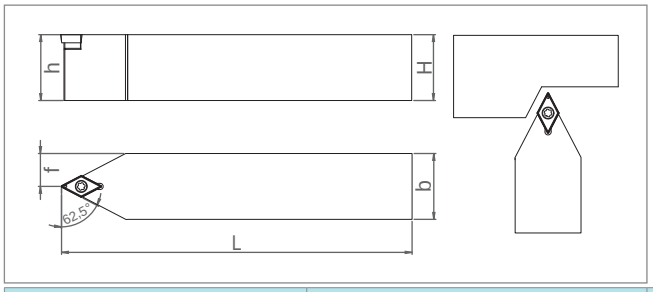

Ordering Code	Item Designation	Dimensions (mm)				Master Insert*
Direction	*SDNCN (62.5)*	*h=H*	*b*	*L*	*f*	
Neutral						
SM02692	SDNCN 0808 E07	8	8	70	4	DCM. 0702..
SM02647	SDNCN 1010 E07	10	10	70	5	
SM02616	SDNCN 1212 F07	12	12	80	6	
SM02586	SDNCN 1616 H07	16	16	100	8	
SM37595	SDNCN 1212 F11	12	12	80	6	DCM. 11T3..
SM02890	SDNCN 1616 H11	16	16	100	8	
SM02807	SDNCN 2020 K11	20	20	125	10	
SM02845	SDNCN 2525 M11	25	25	150	12.5	
SM02852	SDNCN 3232 P11	32	32	170	16	

Size Designation	Master Insert*	Spare Parts					
	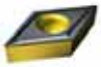	Screw	Shim 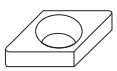	Shim Screw	Torx Key	Plug	Allen Key
0808 - 1616	DCM. 0702..	SSV M2.5x6-9505	-	-	STK-T08-9908	-	-
1212	DCM. 11T3..	SSV M3.5x10-9511	BAX DC11-9613	SBV5 M5x0.5 A3.5x9-9408	STK-T15-9910		
1616		SSV M3.5x12-9526					
2020 - 3232		SSV M3.5x14-9512		SBV M5.05 A3.5x11-9407			
2525-JT		SSV M3.5x10-9511		SBV5 M5x0.5 A3.5x9-9408		SMHT G1/8-AA3 9259	SAK-AA3-9902

*Suitable Insert is ISO

**Spare Parts Ordering Codes*

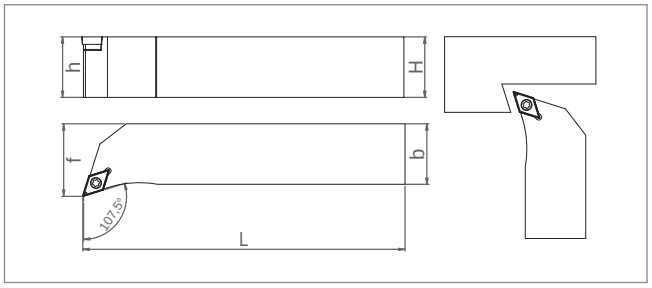

Ordering Code		Item Designation	Dimensions (mm)				Master Insert*
Direction		*SDHCR/L (107.5)*	*h=H*	*b*	*L*	*f*	
Right	*Left*						
SM02708	SM02715	SDHCR/L 0808 E07	8	8	70	11	DCM. 0702..
SM02654	SM02661	SDHCR/L 1010 E07	10	10	70	12	
SM02722	SM02739	SDHCR/L 1212 F07	12	12	80	15	
SM02746	SM02753	SDHCR/L 1616 H07	16	16	100	20	
SM02906	SM02913	SDHCR/L 1616 H11	16	16	100	20	DCM. 11T3..
SM02814	SM02876	SDHCR/L 2020 K11	20	20	125	25	
SM02920	SM02937	SDHCR/L 2525 M11	25	25	150	29	
SM02944	SM02951	SDHCR/L 3232 P11	32	32	170	38	

Size Designation	Master Insert*	Spare Parts			
	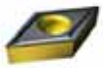	Screw	Shim	Shim Screw	Torx Key
			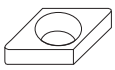		
0808 - 1616	DCM. 0702..	SSV M2.5x6-9505	-	-	STK-T08-9908
1212	DCM. 11T3..	SSV M3.5x10-9511	BAX DC11-9613	SBV5 M5x0.5 A3.5x9-9408	STK-T15-9910
1616		SSV M3.5x12-9526			
2020 - 3232		SSV M3.5x14-9512		SBV M5.05 A3.5x11-9407	

*Suitable Insert is ISO

***Spare Parts Ordering Codes*

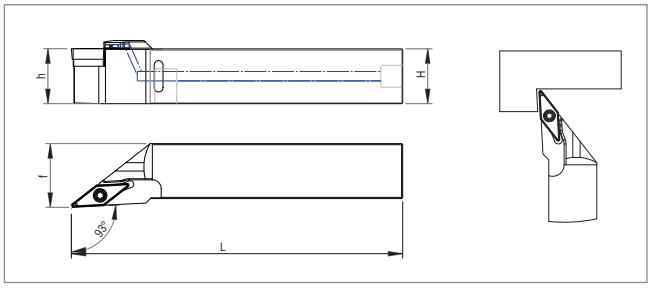

Ordering Code		Item Designation	Dimensions (mm)				Master Insert*
Direction		SVJBR/L-JT (93)	h=H	b	L	f	
Right	Left						
NEW **SM79168**	**SM79175**	**SVJBR/L 2020 K16-JT**	**20**	**20**	**125**	**25**	VBM. 1604..
SM57920	SM57937	SVJBR/L 2525 M16-JT	25	25	150	29	

Cooling accessories are optional / See Page "529" for cooling accessory.
Soğutma ekipmanları opsiyoneldir / Bkz. Sayfa "529" Soğutma aksesuarları için

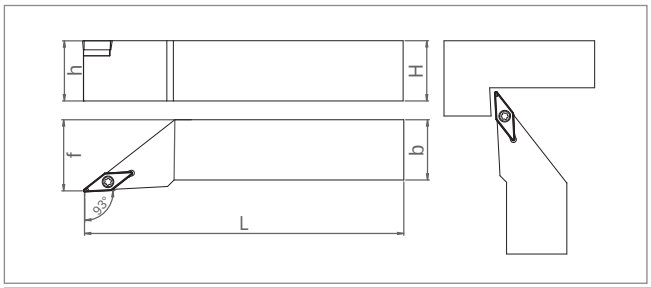

Ordering Code		Item Designation	Dimensions (mm)				Master Insert*
SM27138	SM27145	SVJBR/L 1212 F11	12	12	80	15	VBM. 1103..
SM04313	SM04320	SVJBR/L 1616 H11	16	16	100	20	
SM04269	SM04276	SVJBR/L 2020 K11	20	20	125	25	
SM04283	SM04306	SVJBR/L 2525 M11	25	25	150	29	
SM04504	SM04511	SVJBR/L 1616 H16	16	16	100	20	VBM. 1604..
SM04566	SM04542	SVJBR/L 2020 K16	20	20	125	25	
SM04597	SM04580	SVJBR/L 2525 M16	25	25	150	29	
SM04610	SM04627	SVJBR/L 3232 P16	32	32	170	38	

Size Designation	Master Insert*	Spare Parts					
		Screw	Shim 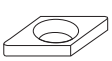	Shim Screw	Torx Key	Plug	Allen Key
1616 - 2525	VBM. 1103..	SSV M2.5x6-9505	-	-	STK-T08-9908	-	-
1616	VBM. 1604..	SSV M3.5x12-9526	BAX VB16-9618	SBV5 M5x0.5 A3.5x9-9408	STK-T15-9910		
2020 - 3232		SSV M3.5x14-9512		SBV M5x0.5 A3.5x11-9407			
2020 - 2525-JT						SMHT G1/8-AA3 9259	SAK-AA3-9902

*Suitable Insert is ISO

**Spare Parts Ordering Codes*

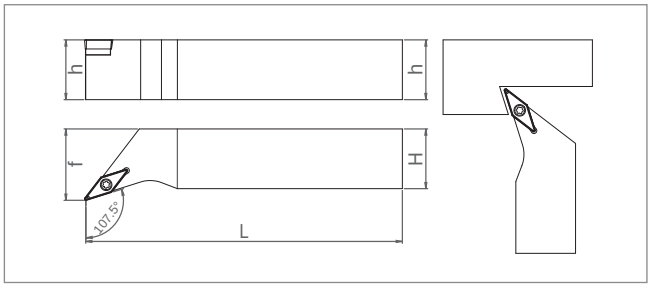

Ordering Code		Item Designation	Dimensions (mm)				Master Insert*
Direction		*SVHBR/L (107.5)*	*h=H*	*b*	*L*	*f*	
Right	*Left*						
SM04344	SM04399	SVHBR/L 1616 H11	16	16	100	20	VBM. 1103..
SM04450	SM04412	SVHBR/L 2020 K11	20	20	125	25	
SM04375	SM04436	SVHBR/L 2525 M11	25	25	150	29	
SM04535	SM04726	SVHBR/L 1616 H16	16	16	100	20	VBM. 1604..
SM04573	SM04467	SVHBR/L 2020 K16	20	20	125	25	
SM04665	SM04481	SVHBR/L 2525 M16	25	25	150	29	
SM04719	SM04696	SVHBR/L 3232 P16	32	32	170	38	

Size Designation	Master Insert*	Spare Parts			
		Screw	Shim	Shim Screw	Torx Key
1616 - 2525	VBM. 1103..	SSV M2.5x6-9505	-	-	STK-T08-9908
1616	VBM. 1604..	SSV M3.5x12-9526	BAX VB16-9618	SBV5 M5x0.5 A3.5x9-9408	STK-T15-9910
2020 - 3232		SSV M3.5x14-9512		SBV M5x0.5 A3.5x11-9407	

*Suitable Insert is ISO

***Spare Parts Ordering Codes*

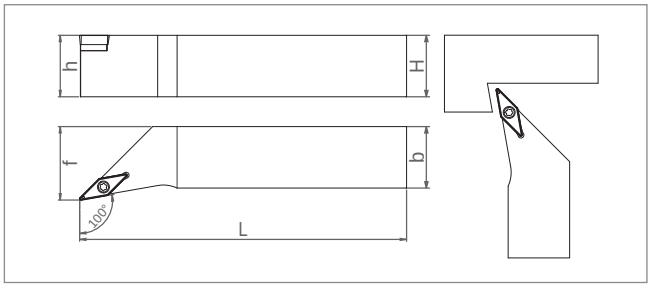

Ordering Code		Item Designation	Dimensions (mm)				Master Insert*
Direction		*SVZBR/L (100)*	*h=H*	*b*	*L*	*f*	
Right	*Left*						
SM04405	SM04351	SVZBR/L 1616 H11	16	16	100	20	VBM. 1103..
SM04429	SM04368	SVZBR/L 2020 K11	20	20	125	25	
SM04443	SM04382	SVZBR/L 2525 M11	25	25	150	29	
SM04733	SM04641	SVZBR/L 1616 H16	16	16	100	20	VBM. 1604..
SM04474	SM04658	SVZBR/L 2020 K16	20	20	125	25	
SM04498	SM04672	SVZBR/L 2525 M16	25	25	150	29	
SM04689	SM04702	SVZBR/L 3232 P16	32	32	170	38	

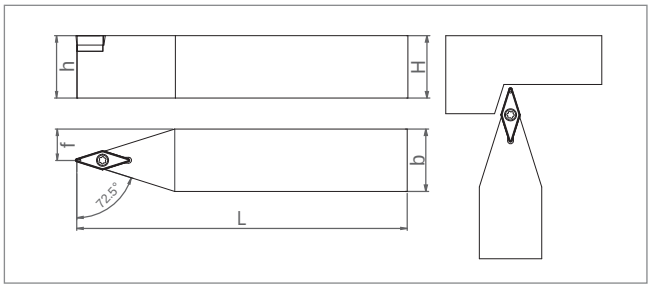

Ordering Code	Item Designation	Dimensions (mm)				Master Insert*
Direction	*SVVBN (72.5)*	*h=H*	*b*	*L*	*f*	
Neutral						
SM04337	SVVBN 1616 H11	16	16	100	8	VBM. 1103..
SM04245	SVVBN 2020 K11	20	20	125	10	
SM04290	SVVBN 2525 M11	25	25	150	12.5	
SM04528	SVVBN 1616 H16	16	16	100	8	VBM. 1604..
SM04559	SVVBN 2020 K16	20	20	125	10	
SM04603	SVVBN 2525 M16	25	25	150	12.5	
SM04634	SVVBN 3232 P16	32	32	170	16	

Size Designation	Master Insert*	Spare Parts			
		Screw	Shim	Shim Screw	Torx Key
1616 - 2525	VBM. 1103..	SSV M2.5x6-9505	-	-	STK-T08-9908
1616	VBM. 1604..	SSV M3.5x12-9526	BAX VB16-9618	SBV5 M5x0.5 A3.5x9-9408	STK-T15-9910
2020 - 3232		SSV M3.5x14-9512		SBV M5x0.5 A3.5x11-9407	

*Suitable Insert is ISO

**Spare Parts Ordering Codes*

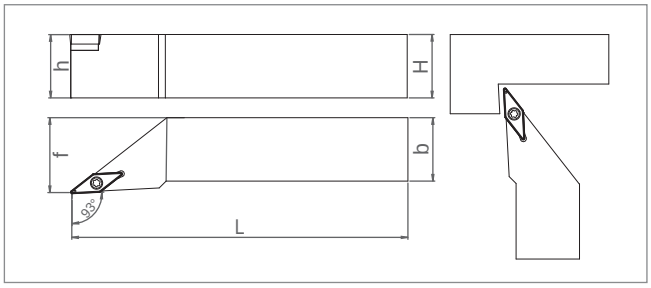

Ordering Code		Item Designation	Dimensions (mm)				Master Insert*
Direction		SVJCR/L (93)	h=H	b	L	f	
Right	Left						
SM26971	SM26995	SVJCR/L 1616 H11	16	16	100	20	VCM. 1103..
SM20962	SM27008	SVJCR/L 2020 K11	20	20	125	25	
SM23611	SM23635	SVJCR/L 2020 K16	20	20	125	25	VCM. 1604..
SM23604	SM23628	SVJCR/L 2525 M16	25	25	150	29	
SM26988	SM27015	SVJCR/L 3232 P16	32	32	170	38	

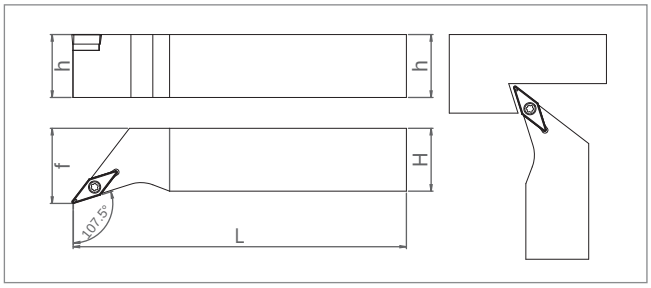

Ordering Code		Item Designation	Dimensions (mm)				Master Insert*
Direction		SVHCR/L (107.5)	h=H	b	L	f	
Right	Left						
SM23680	SM23734	SVHCR/L 1616 H11	16	16	100	20	VCM. 1103..
SM23697	SM23758	SVHCR/L 2020 K11	20	20	125	25	
SM23710	SM23765	SVHCR/L 2020 K16	20	20	125	25	VCM. 1604..
SM23703	SM23772	SVHCR/L 2525 M16	25	25	150	29	
SM23727	SM23789	SVHCR/L 3232 P16	32	32	170	38	

Size Designation	Master Insert*	Spare Parts			
		Screw	Shim	Shim Screw	Torx Key
1616 - 2525	VCM. 1103..	SSV M2.5x6-9505	-	-	STK-T08-9908
2020 - 3232	VCM. 1604..	SSV M3.5x14-9512	BAX VC16-9620	SBV M5x0.5 A3.5x11-9407	STK-T15-9910

*Suitable Insert is ISO

**Spare Parts Ordering Codes

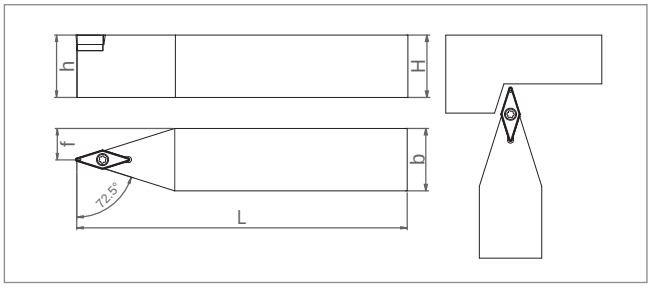

Ordering Code	Item Designation	Dimensions (mm)				Master Insert*
Direction	*SVVCN (72.5)*	*h=H*	*b*	*L*	*f*	
Neutral						
SM45026	SVVCN 1616 H11	16	16	100	8	VCM. 1103..
SM44418	SVVCN 2020 K11	20	20	125	10	
SM44401	SVVCN 2020 K16	20	20	125	10	VCM. 1604..
SM40199	SVVCN 2525 M16	25	25	150	12.5	
SM45064	SVVCN 3232 P16	32	32	170	16	

Size Designation	Master Insert*	Spare Parts			
		Screw	Shim	Shim Screw	Torx Key
1616 - 2525	VCM. 1103..	SSV M2.5x6-9505	-	-	STK-T08-9908
2020 - 3232	VCM. 1604..	SSV M3.5x14-9512	BAX VC16-9620	SBV M5x0.5 A3.5x11-9407	STK-T15-9910

*Suitable Insert is ISO

**Spare Parts Ordering Codes*

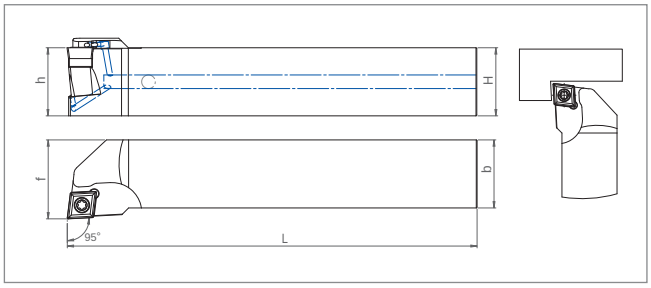

Ordering Code		Item Designation	Dimensions (mm)				Master Insert*
Direction		SCLCR/L-JT (95)	h=H	b	L	f	
Right	Left						
SM79182	**SM79199**	**SCLCR/L 2020 K09-JT**	**20**	**20**	**125**	**25**	CCM.09T3..
SM57944	SM57951	SCLCR/L 2525 M09-JT	25	25	150	29	

Cooling accessories are optional / See Page "529" for cooling accessory.
Soğutma ekipmanları opsiyoneldir / Bkz. Sayfa "529" Soğutma aksesuarları için

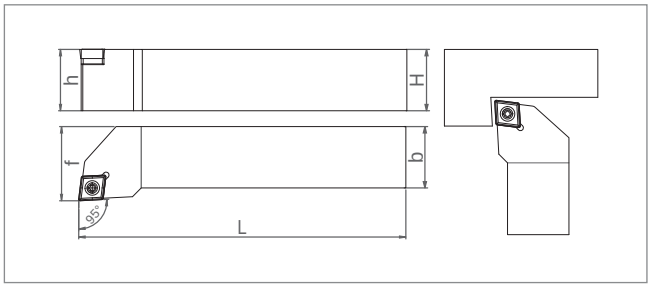

Ordering Code		Item Designation	Dimensions (mm)				Master Insert*
Direction		SCLCR/L (95)	h=H	b	L	f	
Right	Left						
SM03767	SM03774	SCLCR/L 0808 E06	8	8	70	10	CCM.0602..
SM02241	SM02258	SCLCR/L 1010 E06	10	10	70	12	
SM27275	SM37588	SCLCR/L 1212 F06	12	12	80	15	
SM02296	SM26681	SCLCR/L 1212 F09	12	12	80	15	CCM.09T3..
SM02340	SM02302	SCLCR/L 1616 H09	16	16	100	20	
SM02326	SM02319	SCLCR/L 2020 K09	20	20	125	25	
SM02357	SM02333	SCLCR/L 2525 M09	25	25	150	29	
SM49239	SM49246	SCLCR/L 1616 H12	16	16	100	20	CCM.1204..
SM02470	SM02487	SCLCR/L 2020 K12	20	20	125	25	
SM02463	SM02524	SCLCR/L 2525 M12	25	25	150	29	

Size Designation	Master Insert*	Spare Parts					
	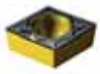	Screw	Shim	Shim Screw	Torx Key	Plug	Allen Key
0808 - 1212	CCM. 0602..	SSV M2.5x6-9505	-	-	STK-T08-9908	-	-
1212	CCM. 09T3..	SSV M3.5x10-9511			STK-T15-9910	-	-
1616		SSV M3.5x12-9526	BAX CC09-9616	SBV5 M5x0.5 A3.5x9-9408			
2020 - 2525		SSV M3.5x14-9512		SBV M5x0.5 A3.5x11-9407			
2020 - 2525-JT						SMHT G1/8-AA3 9259	SAK-AA3-9902
2020 - 2525	CCM.1204..	SSV M4x12x6-9517	BAX CC12-9617	SBV2 M6x0.75 A4.5x13-9410		-	-

*Suitable Insert is ISO
**Spare Parts Ordering Codes

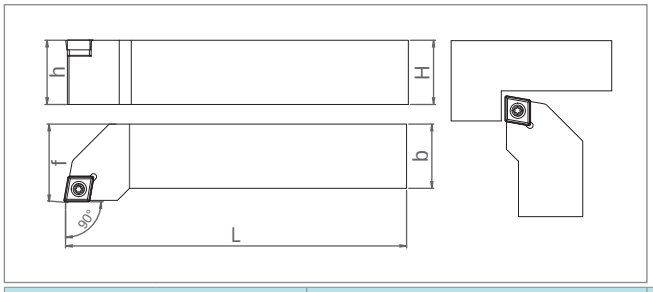

Ordering Code		Item Designation	Dimensions (mm)				Master Insert*
Direction		*SCACR/L (90)*	*h=H*	*b*	*L*	*f*	
Right	*Left*						
SM03798	SM03804	SCACR/L 0808 E06	8	8	70	10	CCM.0602..
SM02272	SM02289	SCACR/L 1010 E06	10	10	70	12	
SM02388	SM02395	SCACR/L 1212 F09	12	12	80	15	CCM.09T3..
SM02418	SM02425	SCACR/L 1616 H09	16	16	100	20	
SM02449	SM02456	SCACR/L 2020 K09	20	20	125	25	
SM26957	SM26964	SCACR/L 2525 M09	25	25	150	29	
SM02500	SM02517	SCACR/L 2020 K12	20	20	125	25	CCM.1204..
SM02548	SM02555	SCACR/L 2525 M12	25	25	150	29	

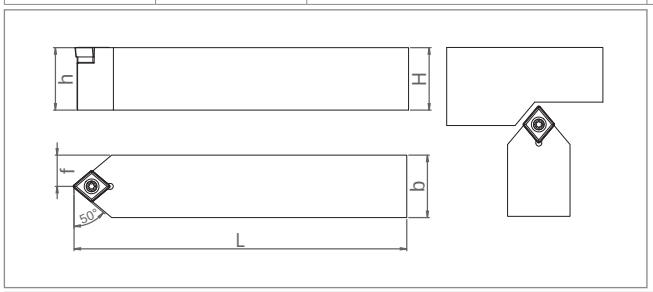

Ordering Code	Item Designation	Dimensions (mm)				Master Insert*
Direction	*SCMCN (50)*	*h=H*	*b*	*L*	*f*	
Neutral						
SM03781	SCMCN 0808 E06	8	8	70	4	CCM.0602..
SM02265	SCMCN 1010 E06	10	10	70	5	
SM02371	SCMCN 1212 F09	12	12	80	6	CCM.09T3..
SM02401	SCMCN 1616 H09	16	16	100	8	
SM02432	SCMCN 2020 K09	20	20	125	10	
SM20993	SCMCN 2525 M09	25	25	150	12.5	
SM02494	SCMCN 2020 K12	20	20	125	10	CCM.1204..
SM02531	SCMCN 2525 M12	25	25	150	12.5	

Size Designation	Master Insert*	Spare Parts			
		Screw	Shim	Shim Screw	Torx Key
0808 - 1212	CCM. 0602..	SSV M2.5x6-9505	-	-	STK-T08-9908
1212	CCM. 09T3..	SSV M3.5x10-9511			STK-T15-9910
1616		SSV M3.5x12-9526	BAX CC09-9616	SBV5 M5x0.5 A3.5x9-9408	
2020 - 2525		SSV M3.5x14-9512		SBV M5x0.5 A3.5x11-9407	
2525-JT					
2020 - 2525	CCM.1204..	SSV M4x12x6-9517	BAX CC12-9617	SBV2 M6x0.75 A4.5x13-9410	

*Suitable Insert is ISO

***Spare Parts Ordering Codes*

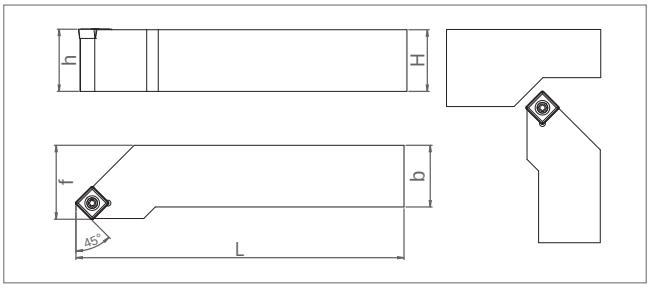

Ordering Code		Item Designation	Dimensions (mm)				Master Insert*
Direction		*SSSCR/L (45)*	*h=H*	*b*	*L*	*f*	
Right	*Left*						
SM03521	SM03538	SSSCR/L 1212 F09	12	12	80	15	SCM. 09T3..
SM03552	SM03569	SSSCR/L 1616 H09	16	16	100	20	
SM03576	SM03583	SSSCR/L 2020 K09	20	20	125	24	
SM03613	SM03514	SSSCR/L 2525 M09	25	25	150	29	
SM03637	SM03644	SSSCR/L 1616 H12	16	16	100	20	SCM. 1204..
SM03651	SM03668	SSSCR/L 2020 K12	20	20	125	24	
SM03675	SM03682	SSSCR/L 2525 M12	25	25	150	29	

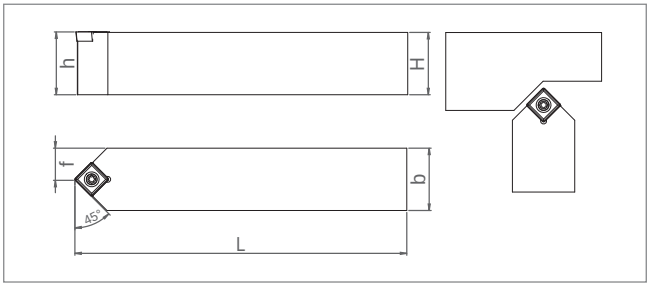

Ordering Code	Item Designation	Dimensions (mm)				Master Insert*
Direction	*SSDCN (45)*	*h=H*	*b*	*L*	*f*	
Neutral						
SM03545	SSDCN 1212 F09	12	12	80	6	SCM. 09T3..
SM03590	SSDCN 1616 H09	16	16	100	8	
SM03606	SSDCN 2020 K09	20	20	125	10	
SM03620	SSDCN 2525 M09	25	25	150	12.5	
SM03699	SSDCN 1616 H12	16	16	100	8	SCM. 1204..
SM03705	SSDCN 2020 K12	20	20	125	10	
SM03712	SSDCN 2525 M12	25	25	150	12.5	

Size Designation	Master Insert*	Spare Parts			
		Screw	Shim	Shim Screw	Torx Key
1212 - 2525	SCM. 09T3..	SSV M3.5x10-9511	-	-	STK-T15-9910
1616	SCM. 1204..	SSV M4x12x6-9517	BAX SC12-9615	SBV4 M6x0.75 A4x9-9411	
2020 - 2525				SBV2 M6x0.75 A4.5x13-9410	

*Suitable Insert is ISO

**Spare Parts Ordering Codes*

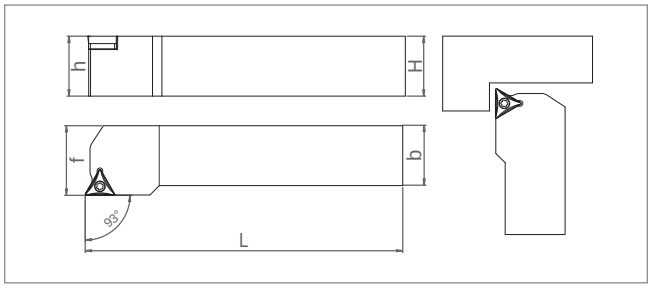

Ordering Code		Item Designation	Dimensions (mm)				Master Insert*
Direction		STJCR/L (93)	h=H	b	L	f	
Right	Left						
SM03811	SM03828	STJCR/L 0808 E09	8	8	70	10	TCM.0902..
SM03729	SM03736	STJCR/L 1010 E09	10	10	70	12	
SM03897	SM03903	STJCR/L 1212 F11	12	12	80	15	TCM.1102..
SM03927	SM03934	STJCR/L 1616 H11	16	16	100	20	
SM04054	SM04061	STJCR/L 1616 H16	16	16	100	20	TCM.16T3..
SM04023	SM04016	STJCR/L 2020 K16	20	20	125	24	
SM04047	SM04030	STJCR/L 2525 M16	25	25	150	29	
SM04078	SM04085	STJCR/L 3232 P16	32	32	170	38	

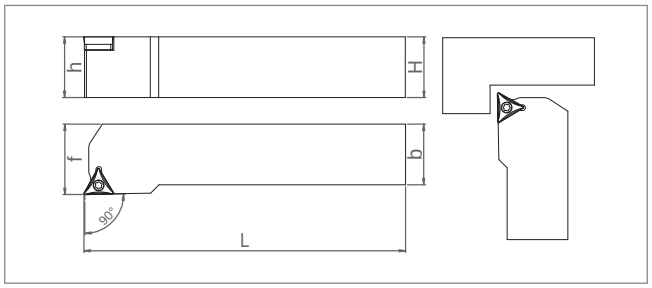

Ordering Code		Item Designation	Dimensions (mm)				Master Insert*
Direction		STGCR/L (90)	h=H	b	L	f	
Right	Left						
SM03835	SM03842	STGCR/L 0808 E09	8	8	70	10	TCM.0902..
SM03743	SM03750	STGCR/L 1010 E09	10	10	70	12	
SM03910	SM03941	STGCR/L 1212 F11	12	12	80	15	TCM.1102..
SM03972	SM03989	STGCR/L 1616 H11	16	16	100	20	
SM04092	SM04108	STGCR/L 1616 H16	16	16	100	20	TCM.16T3..
SM04139	SM04146	STGCR/L 2020 K16	20	20	125	24	
SM04177	SM04184	STGCR/L 2525 M16	25	25	150	29	
SM04221	SM04214	STGCR/L 3232 P16	32	32	170	38	

Size Designation	Master Insert*	Spare Parts			
		Screw	Shim	Shim Screw	Torx Key
0808 - 1010	TCM.0902..	SSV M2.2x5-9503	-	-	STK-T06-9906
1212 - 2020	TCM.1102..	SSV M2.5x6-9505			STK-T08-9908
1616	TCM.16T3..	SSV M3.5x12-9526	BAX TC16-9619	SBV5 M5x0.5 A3.5x9-9408	STK-T15-9910
2020 - 3232		SSV M3.5x14-9512	BAX TC16-9619	SBV M5x0.5 A3.5x11-9407	

*Suitable Insert is ISO

**Spare Parts Ordering Codes*

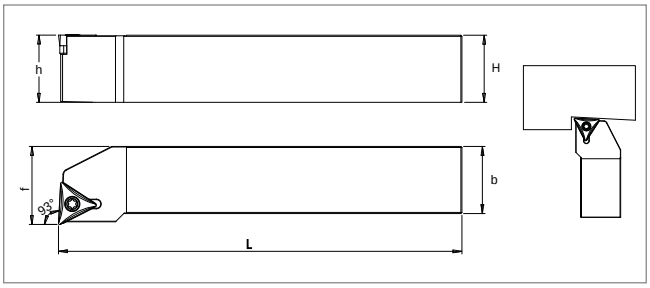

Ordering Code		Item Designation	Dimensions (mm)				Master Insert*
Direction		STUCR/L (93)	h=H	b	L	f	
Right	Left						
SM74255	SM74262	STUCR/L 0808 E09	8	8	70	10	TCM.0902..
SM74279	SM74286	STUCR/L 1010 E09	10	10	70	12	
SM74293	SM74309	STUCR/L 1212 F11	12	12	80	15	TCM.1102..
SM74316	SM74323	STUCR/L 1616 H11	16	16	100	20	
SM74330	SM74347	STUCR/L 1616 H16	16	16	100	20	TCM.16T3..
SM73845	SM73852	STUCR/L 2020 K16	20	20	125	24	
SM74354	SM74361	STUCR/L 2525 M16	25	25	150	29	
SM74378	SM74385	STUCR/L 3232 P16	32	32	170	38	

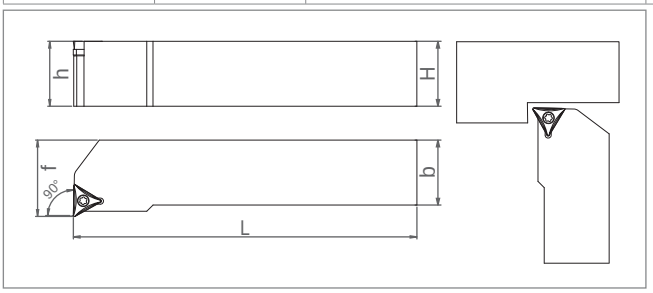

Ordering Code		Item Designation	Dimensions (mm)				Master Insert*
Direction		STFCR/L (90)	h=H	b	L	f	
Right	Left						
SM03873	SM03880	STFCR/L 0808 E09	8	8	70	10	TCM.0902..
SM03866	SM03859	STFCR/L 1010 E09	10	10	70	12	
SM03958	SM03965	STFCR/L 1212 F11	12	12	80	15	TCM.1102..
SM03996	SM04009	STFCR/L 1616 H11	16	16	100	20	
SM04115	SM04122	STFCR/L 1616 H16	16	16	100	20	TCM.16T3..
SM04153	SM04160	STFCR/L 2020 K16	20	20	125	24	
SM04191	SM04207	STFCR/L 2525 M16	25	25	150	29	
SM26582	SM04238	STFCR/L 3232 P16	32	32	170	38	

Size Designation	Master Insert*	Spare Parts			
		Screw	Shim	Shim Screw	Torx Key
0808 - 1010	TCM.0902..	SSV M2.2x5-9503	-	-	STK-T06-9906
1212 - 2020	TCM.1102..	SSV M2.5x6-9505			STK-T08-9908
1616	TCM.16T3..	SSV M3.5x12-9526	BAX TC16-9619	SBV5 M5x0.5 A3.5x9-9408	STK-T15-9910
2020 - 3232		SSV M3.5x14-9512	BAX TC16-9619	SBV M5x0.5 A3.5x11-9407	

**Spare Parts Ordering Codes

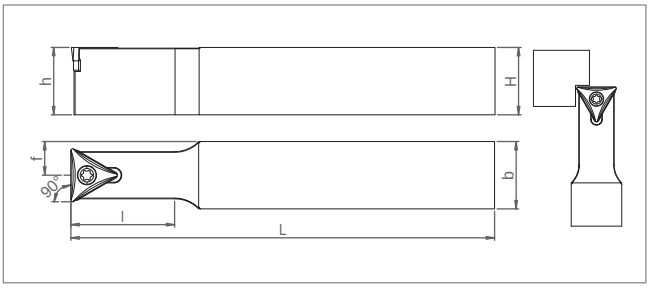

Ordering Code	Item Designation	Dimensions (mm)					Master Insert*
Direction / *Neutral*	*STNCN (90)*	*h=H*	*b*	*L*	*f*	*l*	
SM44432	STNCN 2020 K11	20	20	125	10	26	TCM.1102..
SM44425	STNCN 2020 K16	20	20	125	10	26	TCM.16T3..
SM45095	STNCN 2525 M16	25	25	150	12.5	30	
SM45101	STNCN 3232 P16	32	32	170	16	42	

Size Designation	Master Insert*	Spare Parts			
		Screw	Shim	Shim Screw	Torx Key
2020	TCM.1102..	SSV M2.5x6-9505	-	-	STK-T08-9908
1616	TCM.16T3..	SSV M3.5x12-9526	BAX TC16-9619	SBV5 M5x0.5 A3.5x9-9408	STK-T15-9910
2020 - 3232		SSV M3.5x14-9512	BAX TC16-9619	SBV M5x0.5 A3.5x11-9407	

***Spare Parts Ordering Codes*

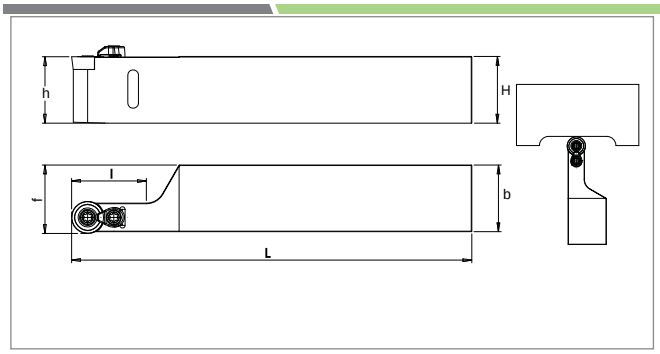

Ordering Code		Item Designation	Dimensions (mm)					Master Insert*
Direction		*SRDCR/L (-)*	*h=H*	*b*	*L*	*f*	*l*	
Right	*Left*							
SM74170	SM74187	SRDCR/L 2525 M12	25	25	150	25.7	22	RC.T 1204..
SM74194	SM74200	SRDCR/L 3232 P12	32	32	170	32.7	22	
SM74217	SM74224	SRDCR/L 2525 M16	25	25	150	25.9	32	RC.T 1605..
SM74231	SM74248	SRDCR/L 3232 P16	25	25	170	32.9	35	

Size Designation	Master Insert*	Spare Parts				
		Screw	Torx Key	Clamp	Clamp Screw	Clamp Screw Key
2020 - 3232	RC.T 1204..	SSV M3.5x10-9511	STK-T15-9910	PSK2 9128	SSV M3.5x11 9532	STK-T15 9910
2525 - 3232	RC.T 1605..	SSV M5x13-9519	STK-T20-9911	PSK4 9128	SSV M3.5x11 9532	STK-T15 9910

*Suitable Insert is ISO

***Spare Parts Ordering Codes*

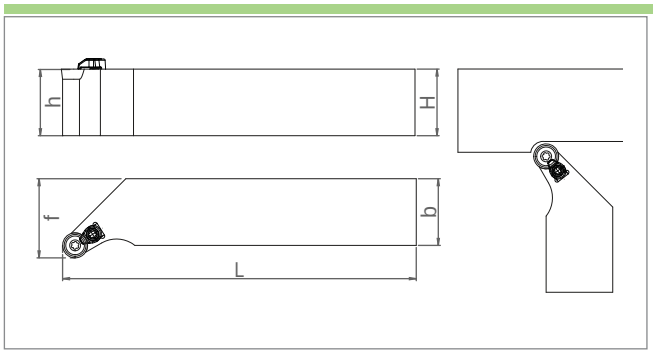

Ordering Code		Item Designation	Dimensions (mm)				Master Insert*
Direction		*SRGCR/L (-)*	*h=H*	*b*	*L*	*f*	
Right	*Left*						
SM27190	SM27213	SRGCR/L 1616 H06	16	16	100	20	RC.T 0602..
SM26568	SM26575	SRGCR/L 2020 K06	20	20	125	24	
SM26728	SM26735	SRGCR/L 2525 M06	25	25	150	29	
SM03040	SM03057	SRGCR/L 1616 H08	16	16	100	20	RC.T 0803..
SM02999	SM03002	SRGCR/L 2020 K08	20	20	125	24	
SM02982	SM03019	SRGCR/L 2525 M08	25	25	150	29	
SM03026	SM26940	SRGCR/L 3232 P08	32	32	170	38	
SM03194	SM03200	SRGCR/L 1616 H10	16	16	100	20	RC.T 10T3..
SM03101	SM03118	SRGCR/L 2020 K10	20	20	125	24	
SM03088	SM03125	SRGCR/L 2525 M10	25	25	150	29	
SM03132	SM03217	SRGCR/L 3232 P10	32	32	170	38	
SM03255	SM03262	SRGCR/L 2020 K12	20	20	125	24	RC.T 1204..
SM03248	SM03279	SRGCR/L 2525 M12	25	25	150	29	
SM03286	SM03323	SRGCR/L 3232 P12	32	32	170	38	
SM03361	SM03378	SRGCR/L 2525 M16	25	25	150	29	RC.T 1605..
SM03385	SM03422	SRGCR/L 3232 P16	32	32	170	38	
SM03460	SM03477	SRGCR/L 2525 M20	25	25	150	29	RC.T 2006..
SM03491	SM03507	SRGCR/L 3232 P20	32	32	170	38	

Size Designation	Master Insert*	Spare Parts				
		Screw	Torx Key	Clamp	Clamp Screw	Clamp Screw Key
1616 - 2525	RC.T 0602..	SSV M2.5x6-9505	STK-T08-9908	-	-	-
1616 - 3232	RC.T 0803..	SSV M3x8-9508		PSK4 9128	SSV M3.5x11 9532	STK-T15 9910
1616 - 3232	RC.T 10T3..	SSV M3.5x10-9511	STK-T15-9910			
2020 - 3232	RC.T 1204..			PSK2 9126		
2525 - 3232	RC.T 1605..	SSV M5x13-9519	STK-T20-9911			
2525 - 3232	RC.T 2006..	SSV M6x16-9520		PSK3 9127	SSV M6x16 9520	STK-T20 9911

*Suitable Insert is ISO

**Spare Parts Ordering Codes*

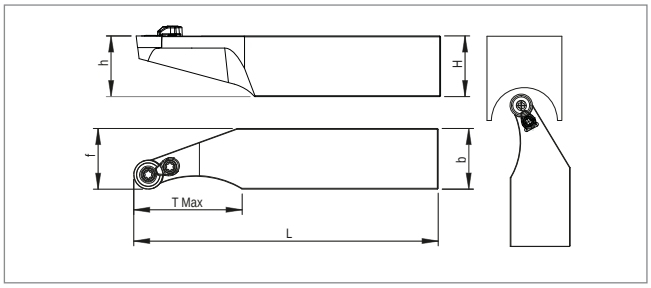

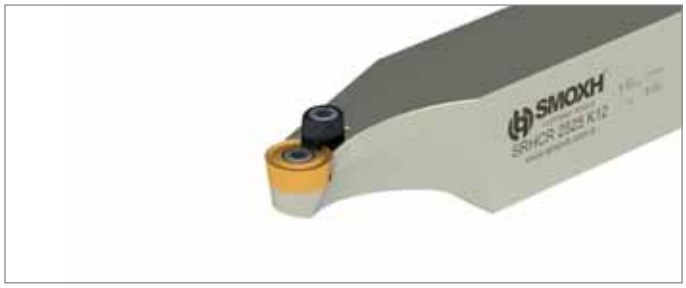

Ordering Code		Item Designation	Dimensions (mm)							Master Insert*
Direction		SRHCR/L (-)	h=H	b	L	f	R Min	R Max	T Max	
Right	Left									
SM03163	SM03170	SRHCR/L 2020 K10	20	20	125	20	37.5	∞	30	RC.T 10T3..
SM03156	SM03149	SRHCR/L 2525 K10	25	25	125	25	37.5	∞	43	
SM03309	SM03316	SRHCR/L 2020 K12	20	20	125	20	37.5	∞	30	RC.T 1204..
SM03330	SM03347	SRHCR/L 2525 K12	25	25	125	25	37.5	∞	43	
SM03408	SM03415	SRHCR/L 2020 K16	20	20	125	20	37.5	∞	30	RC.T 1605..
SM03439	SM03446	SRHCR/L 2525 K16	25	25	125	25	37.5	∞	43	

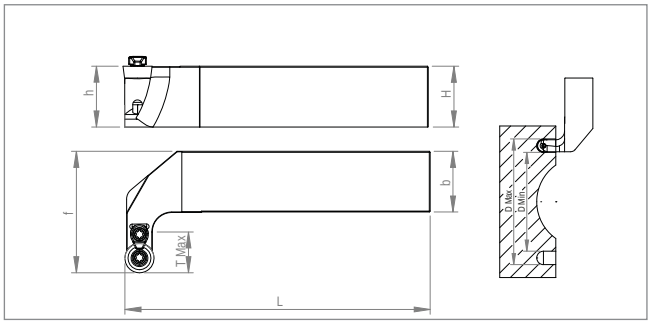

Ordering Code		Item Designation	Dimensions (mm)							Master Insert*
Direction		SRXCR/L (-)	h=H	b	L	f	D Min	D Max	T Max	
Right	Left									
SM49253	SM49260	SRXCR/L 2525 K08	25	25	125	50	44	∞	17	RC.T 0803..
SM49284	SM49277	SRXCR/L 2525 K10	25	25	125	50	44	∞	17	RC.T 10T3..
SM49291	SM49307	SRXCR/L 2525 K12	25	25	125	50	44	∞	17	RC.T 1204..

Size Designation	Master Insert*	Spare Parts				
		Screw	Torx Key	Clamp	Clamp Screw	Clamp Screw Key
1616 - 2525	RC.T 0602..	SSV M2.5x6-9505	STK-T08-9908	-	-	-
1616 - 3232	RC.T 0803..	SSV M3x8-9508		PSK4 9128	SSV M3.5x11 9532	STK-T15 9910
1616 - 3232	RC.T 10T3..	SSV M3.5x10-9511	STK-T15-9910			
2020 - 3232	RC.T 1204..					
2525 - 3232	RC.T 1605..	SSV M5x13-9519	STK-T20-9911	PSK2 9126		
2525 - 3232	RC.T 2006..	SSV M6x16-9520		PSK3 9126	SSV M6x16 9520	STK-T20 9911

*Suitable Insert is ISO

**Spare Parts Ordering Codes

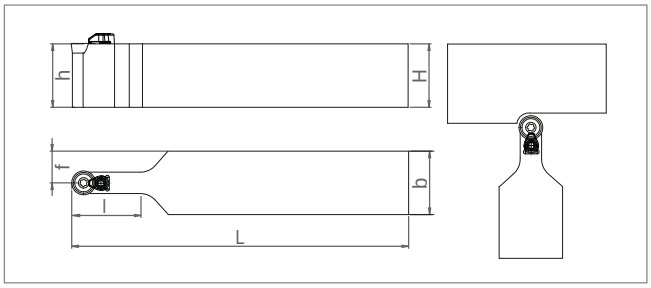

Ordering Code	Item Designation	Dimensions (mm)					Master Insert*
Direction	*SRDCN (-)*	*h=H*	*b*	*L*	*l*	*f*	
Neutral							
SM27152	SRDCN 1616 H06	16	16	100	15	8	RC.T 0602..
SM26551	SRDCN 2020 K06	20	20	125	17	10	
SM27169	SRDCN 2525 M06	25	25	150	17	12.5	
SM03033	SRDCN 1616 H08	16	16	100	15	8	RC.T 0803..
SM02968	SRDCN 2020 K08	20	20	125	20	10	
SM02975	SRDCN 2525 M08	25	25	150	20	12.5	
SM27183	SRDCN 3232 P08	32	32	170	20	16	
SM03187	SRDCN 1616 H10	16	16	100	20	8	RC.T 10T3..
SM03064	SRDCN 2020 K10	20	20	125	20	10	
SM03071	SRDCN 2525 M10	25	25	150	20	12.5	
SM03095	SRDCN 3232 P10	32	32	170	20	16	
SM03224	SRDCN 2020 K12	20	20	125	20	10	RC.T 1204..
SM03231	SRDCN 2525 M12	25	25	150	22	12.5	
SM03293	SRDCN 3232 P12	32	32	170	22	16	
SM03354	SRDCN 2525 M16	25	25	150	32	12.5	RC.T 1605..
SM03392	SRDCN 3232 P16	32	32	170	35	16	
SM03453	SRDCN 2525 M20	25	25	150	32	12.5	RC.T 2006..
SM03484	SRDCN 3232 P20	32	32	170	40	16	
SM27176	SRDCN 4040 S20	40	40	250	40	20	

Size Designation	Master Insert*	Spare Parts				
		Screw	Torx Key	Clamp	Clamp Screw	Clamp Screw Key
1616 - 2525	RC.T 0602..	SSV M2.5x6-9505	STK-T08-9908	-	-	-
1616 - 3232	RC.T 0803..	SSV M3x8-9508		PSK4 9128	SSV M3.5x11 9532	STK-T15 9910
1616 - 3232	RC.T 10T3..	SSV M3.5x10-9511	STK-T15-9910			
2020 - 3232	RC.T 1204..					
2525 - 3232	RC.T 1605..	SSV M5x13-9519	STK-T20-9911	PSK2 9126		
2525 - 3232	RC.T 2006..	SSV M6x16-9520		PSK3 9127	SSV M6x16 9520	STK-T20 9911

*Suitable Insert is ISO

**Spare Parts Ordering Codes*

CARTRIDGE SWISS TYPE TURNING TOOLS

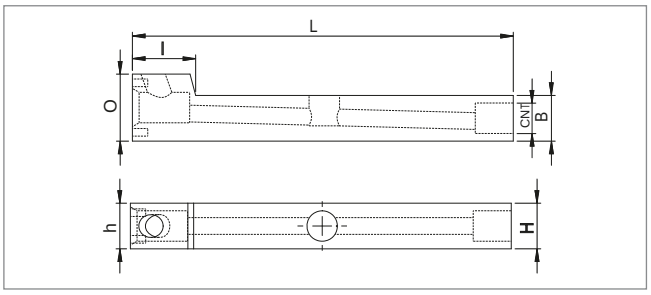

Ordering Code	Item Designation	Dimensions (mm)						
	SKG		*H=h*	*b*	*L*	*O*	*l*	*CNT*
SM80478	SKG 1212 L100 H	✓	12	12	100	17	17	M8x1
SM80485	SKG 1616 L100 H	✓	16	16	100	21	17	M8x1

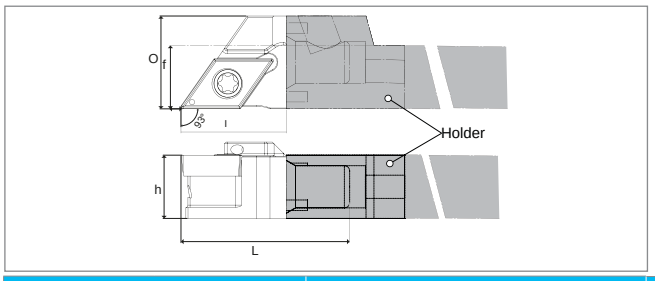

Ordering Code		Item Designation	Dimensions (mm)							Master Insert*
Direction		*SKO SDJCR/L-JT (93)*		*h*	*f*	*l*	*L*	*O*		
Right	*Left*									
SM80065	SM80102	SKO 12x20 SDJCR/L-07-JT	✓	12	12	20	32	17		DCM. 0702..
SM80089	SM80126	SKO 16x20 SDJCR/L-07-JT	✓	16	16	20	32	21		
SM80072	SM80119	SKO 16x20 SDJCR/L-11-JT	✓	16	0	20	32	21		DCM. 11T3..
SM80058	SM80096	SKO 12x20 SDJCR/L-11-JT	✓	12	12	20	32	17		

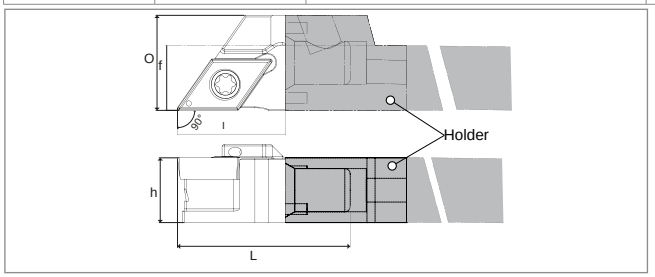

Ordering Code		Item Designation	Dimensions (mm)							Master Insert*
Direction		*SKO SDACR/L-JT (90)*		*h*	*f*	*l*	*L*	*O*		
Right	*Left*									
SM80140	SM80188	SKO 12x20 SDACR/L-07-JT	✓	12	12	20	32	17		DCM. 0702..
SM80164	SM80201	SKO 16x20 SDACR/L-07-JT	✓	16	16	20	32	21		
SM80133	SM80171	SKO 12x20 SDACR/L-11-JT	✓	12	12	20	32	17		DCM. 11T3..
SM80157	SM80195	SKO 16x20 SDACR/L-11-JT	✓	16	16	20	32	21		

Size Designation	Master Insert*	Spare Parts			
		Screw	Shim	Shim Screw	Torx Key
			-	-	
12x20 - 16x20	DCM. 0702..	SSV M2.5x6-9505	-	-	STK-T08-9908
	DCM. 11T3..	SSV M3.5x10-9511			STK-T15-9910

*Suitable Insert is ISO

***Spare Parts Ordering Codes*

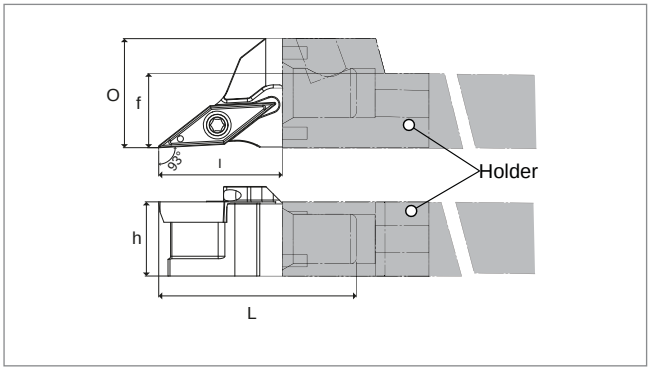

Ordering Code		Item Designation	Dimensions (mm)						Master Insert*
Direction		SKO SVJCR/L-JT (93)		h	f	l	L	O	
Right	Left								
SM80355	SM80379	SKO 12x20 SVJCR/L-11	✓	12	12	20	32	17	VCM. 1103..
SM80362	SM80386	SKO 16x20 SVJCR/L-16	✓	16	16	20	32	21	VCM. 1604..

Size Designation	Master Insert*	Spare Parts			
		Screw	Shim	Shim Screw	Torx Key
			-	-	
12x20	VCM. 1103..	SSV M2.5x6-9505	-	-	STK-T08-9908
16x20	VCM. 1604..	SSV M3.5x10-9511	-	-	STK-T15-9910

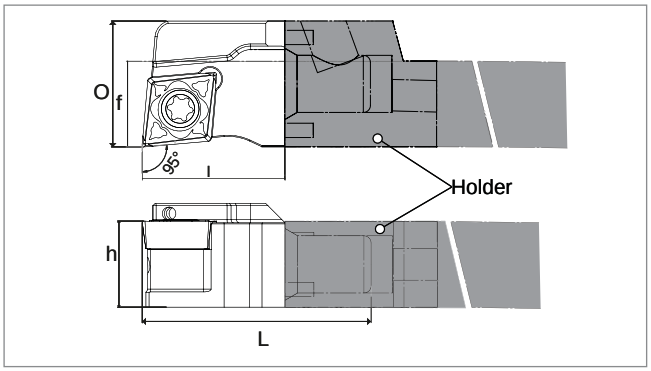

Ordering Code		Item Designation	Dimensions (mm)						Master Insert*
Direction		SKO SCLCR/L-JT (95)		h	f	l	L	O	
Right	Left								
SM80218	SM80256	SKO 12x20 SCLCR/L-06-JT	✓	12	12	20	32	17	CCM. 0602..
SM80232	SM80270	SKO 16x20 SCLCR/L-06-JT	✓	16	16	20	32	21	
SM80225	SM80263	SKO 12x20 SCLCR/L-09-JT	✓	12	12	20	32	17	CCM. 09T3..
SM80249	SM80287	SKO 16x20 SCLCR/L-09-JT	✓	16	16	20	32	21	

Size Designation	Master Insert*	Spare Parts			
		Screw	Shim	Shim Screw	Torx Key
			-	-	
12x20 - 16x20	CCM. 0602..	SSV M2.5x6-9505	-	-	STK-T08-9908
	CCM. 09T3..	SSV M3.5x10-9511			STK-T15-9910

**Spare Parts Ordering Codes

CARTRIDGE SWISS TYPE TURNING TOOLS

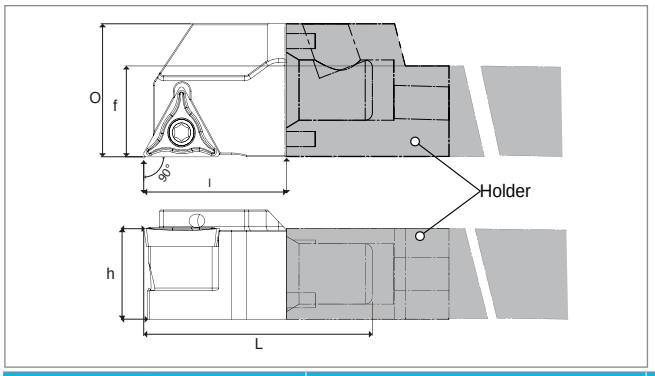

Ordering Code		Item Designation	Dimensions (mm)						Master Insert*
Direction		SKO STGCR/L-JT (90)		h	f	l	L	O	
Right	Left								
SM80294	SM80324	SKO 12x20 STGCR/L-11	✓	12	20	32	17	17	TCM.1102..
SM80300	SM80331	SKO 16x20 STGCR/L-11	✓	16	20	32	21	21	
SM80317	SM80348	SKO 16x20 STGCR/L-16	✓	16	20	32	21	21	TCM.16T3..

Size Designation	Master Insert*	Spare Parts			
		Screw	Shim	Shim Screw	Torx Key
			-	-	
12x20 - 16x20	TCM.1102..	SSV M2.5x6-9505	-	-	STK-T08-9908
16x20	TCM.16T3..	SSV M3.5x10-9511			STK-T15-9910

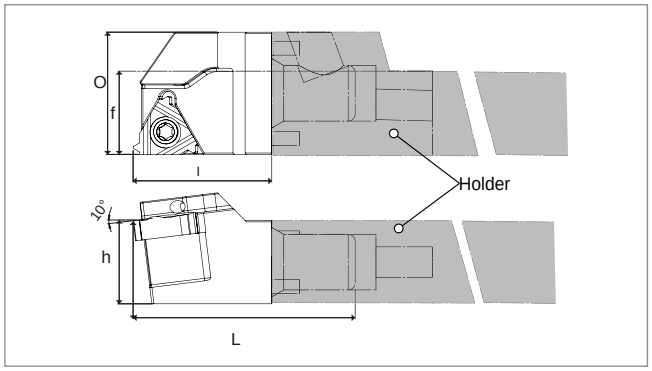

Ordering Code		Item Designation	Dimensions (mm)						Master Insert*
Direction		SKO SER/L-JT		h	f	l	L	O	
Right	Left								
SM80393	SM80430	SKO 12x20 SER/L-11-JT	✓	12	20	32	17	17	11 ER/EL ISO
SM80416	SM80454	SKO 16x20 SER/L-11-JT	✓	16	20	32	21	21	
SM80409	SM80447	SKO 12x20 SER/L-16-JT	✓	12	20	32	17	17	16 ER/EL ISO (0.35-3)
SM80423	SM80461	SKO 16x20 SER/L-16-JT	✓	16	20	32	21	21	

Size Designation	Master Insert*	Spare Parts			
		Screw	Shim	Shim Screw	Torx Key
			-	-	
12x20 - 16x20	11 ER/EL	SSV M2.5x6-9505	-	-	STK-T08-9908
	16 ER/EL	SSV M3.5x10-9511			STK-T15-9910

*Suitable Insert is ISO

*Spare Parts Ordering Codes

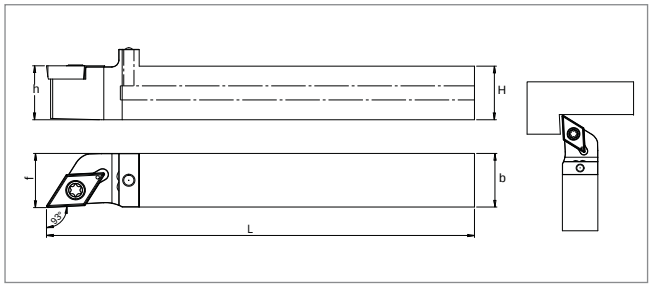

Ordering Code		Item Designation	Dimensions (mm)					Master Insert*
Direction		SDJCR/L K.O-JT (93)		h=H	b	L	f	
Right	Left							
SM74439	SM74446	SDJCR/L 1010 K07 KO-JT	✓	10	10	125	10	DCM. 0702..
SM74453	SM74460	SDJCR/L 1212 K11 KO-JT	✓	12	12	125	12	DCM. 11T3..
SM74477	SM74484	SDJCR/L 1616 K11 KO-JT	✓	16	16	125	16	

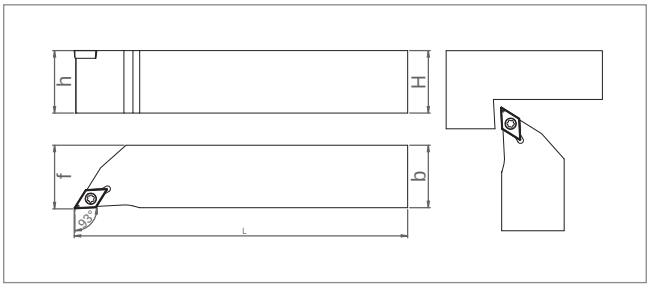

Ordering Code		Item Designation	Dimensions (mm)				Master Insert*
Direction		SDJCR/L K.O (93)	h=H	b	L	f	
Right	Left						
SM23185	SM23291	SDJCR/L 1010 K07 K.O	10	10	125	10	DCM. 0702..
SM23192	SM23307	SDJCR/L 1212 G07 K.O	12	12	90	12	
SM23208	SM23314	SDJCR/L 1212 K07 K.O	12	12	125	12	
SM23215	SM23321	SDJCR/L 1616 F07 K.O	16	16	75	16	
SM23222	SM23338	SDJCR/L 1616 K07 K.O	16	16	125	16	
SM23239	SM23345	SDJCR/L 2020 K07 K.O	20	20	125	20	
SM23246	SM23352	SDJCR/L 1212 G11 K.O	12	12	90	12	DCM. 11T3..
SM23253	SM23369	SDJCR/L 1212 K11 K.O	12	12	125	12	
SM23260	SM23376	SDJCR/L 1616 F11 K.O	16	16	75	16	
SM23277	SM24670	SDJCR/L 1616 K11 K.O	16	16	125	16	
SM23284	SM23390	SDJCR/L 2020 K11 K.O	20	20	125	20	

Size Designation	Master Insert*	Spare Parts					
		Screw	Shim	Shim Screw	Torx Key	Plug	Allen Key
			-	-			
1010 - 2020	DCM. 0702..	SSV M2.5x6-9505	-	-	STK-T08-9908	-	-
1010-JT						SMHT M8-AA4 9261	SAK-AA4-9903
1212 - 2020	DCM. 11T3..	SSV M3.5x10-9511			STK-T15-9910	-	-
1212 - 1616-JT						SMHT M8-AA4 9261	SAK-AA4-9903

**Spare Parts Ordering Codes

SWISS TYPE EXTERNAL TURNING TOOLS

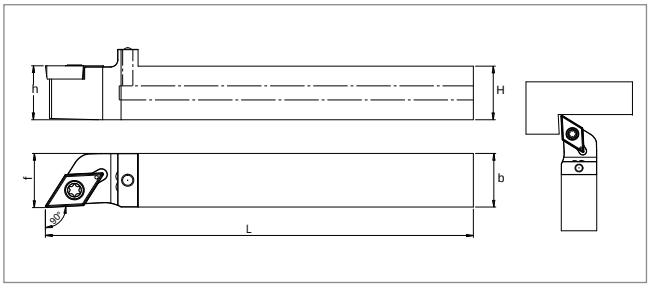

Ordering Code		Item Designation	Dimensions (mm)					Master Insert*
Direction		SDACR/L K.O-JT (90)		h=H	b	L	f	
Right	Left							
SM76570	SM76600	SDACR/L 1010 K07 KO-JT	✓	10	10	125	10	DCM. 0702..
SM76587	SM76617	SDACR/L 1212 K11 KO-JT	✓	12	12	125	12	DCM. 11T3..
SM76594	SM76624	SDACR/L 1616 K11 KO-JT	✓	16	16	125	16	

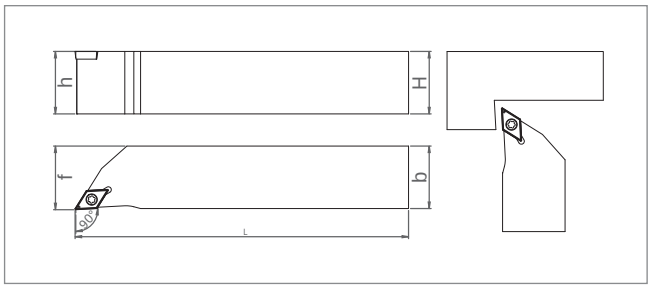

Ordering Code		Item Designation	Dimensions (mm)				Master Insert*
Direction		SDACR/L K.O (90)	h=H	b	L	f	
Right	Left						
SM55391	SM55490	SDACR/L 1010 K07 K.O	10	10	125	10	DCM. 0702..
SM55407	SM55506	SDACR/L 1212 K07 K.O	12	12	125	12	
SM55414	SM55513	SDACR/L 1616 K07 K.O	16	16	125	16	
SM55421	SM55520	SDACR/L 1212 K11 K.O	12	12	125	12	DCM. 11T3..
SM55438	SM55537	SDACR/L 1616 K11 K.O	16	16	125	16	

Size Designation	Master Insert*	Spare Parts					
		Screw	Shim	Shim Screw	Torx Key	Plug	Allen Key
			-	-			
1010 - 2020	DCM. 0702..	SSV M2.5x6-9505	-	-	STK-T08-9908	-	-
1010-JT						SMHT M8-AA4 9261	SAK-AA4-9903
1212 - 2020	DCM. 11T3..	SSV M3.5x10-9511			STK-T15-9910	-	-
1212 - 1616-JT						SMHT M8-AA4 9261	SAK-AA4-9903

*Suitable Insert is ISO

**Spare Parts Ordering Codes

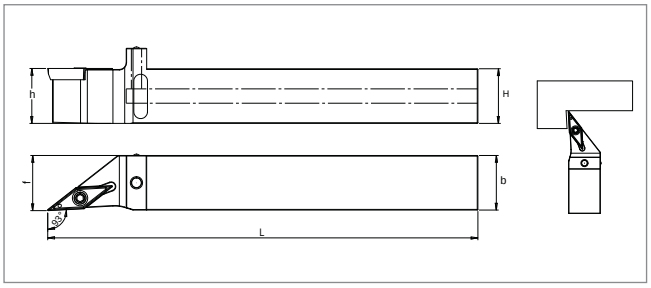

Ordering Code		Item Designation	Dimensions (mm)					Master Insert*
Direction		SVJBR/L K.O-JT (93)		h=H	b	L	f	
Right	Left							
SM76631	SM76655	SVJBR/L 1212 K11 KO-JT	✓	12	12	125	12	VBM. 1103..
SM76648	SM76662	SVJBR/L 1616 K11 KO-JT	✓	16	16	125	16	

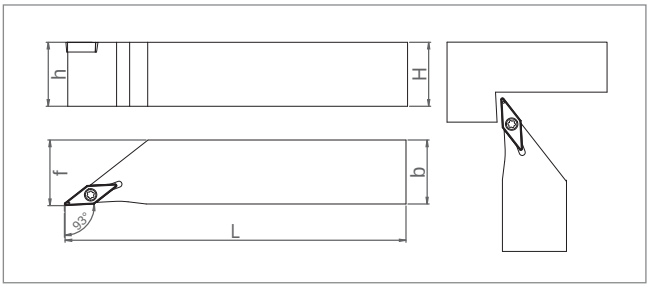

Ordering Code		Item Designation	Dimensions (mm)				Master Insert*
Direction		SVJBR/L K.O (93)	h=H	b	L	f	
Right	Left						
SM23406	SM23468	SVJBR/L 1010 K11 K.O	10	10	125	10	VBM. 1103..
SM23413	SM23475	SVJBR/L 1212 G11 K.O	12	12	90	12	
SM23420	SM23482	SVJBR/L 1212 K11 K.O	12	12	125	12	
SM23437	SM23499	SVJBR/L 1616 F11 K.O	16	16	75	16	
SM23444	SM23505	SVJBR/L 1616 K11 K.O	16	16	125	16	
SM23451	SM23512	SVJBR/L 2020 K11 K.O	20	20	125	20	

Size Designation	Master Insert*	Spare Parts					
		Screw	Shim	Shim Screw	Torx Key	Plug	Allen Key
1010 - 2020	VBM. 1103..	SSV M2.5x6-9505	-	-	STK-T08-9908	-	-
1212 -1616-JT						SMHT M8-AA4 9261	SAK-AA4-9903

*Suitable Insert is ISO

**Spare Parts Ordering Codes*

SWISS TYPE EXTERNAL TURNING TOOLS

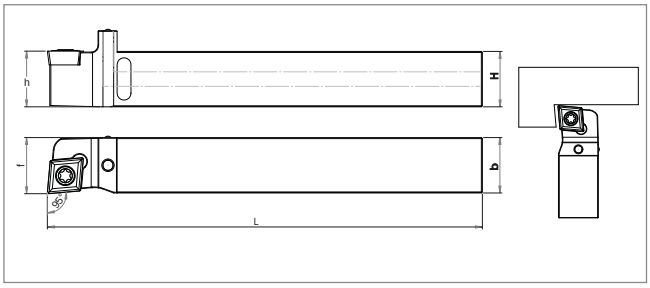

Ordering Code		Item Designation	Dimensions (mm)					Master Insert*
Direction		SCLCR/L K.O-JT (95)		h=H	b	L	f	
Right	Left							
SM74392	SM74408	SCLCR/L 1212 K09 KO-JT	✓	12	12	125	12	CCM. 09T3..
SM74415	SM74422	SCLCR/L 1616 K09 KO-JT	✓	16	16	125	16	

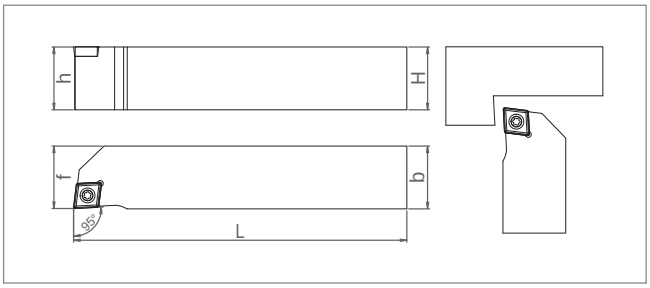

Ordering Code		Item Designation	Dimensions (mm)				Master Insert*
Direction		SCLCR/L K.O (95)	h=H	b	L	f	
Right	Left						
SM22980	SM23086	SCLCR/L 1010 K06 K.O	10	10	125	10	CCM. 0602..
SM23000	SM23093	SCLCR/L 1212 G06 K.O	12	12	90	12	
SM23017	SM23109	SCLCR/L 1212 K06 K.O	12	12	125	12	
SM23024	SM23116	SCLCR/L 1616 F06 K.O	16	16	75	16	
SM23031	SM23123	SCLCR/L 1616 K06 K.O	16	16	125	16	
SM22997	SM23130	SCLCR/L 1212 G09 K.O	12	12	90	12	CCM. 09T3..
SM23048	SM23147	SCLCR/L 1212 K09 K.O	12	12	125	12	
SM23055	SM23154	SCLCR/L 1616 F09 K.O	16	16	75	16	
SM23062	SM23161	SCLCR/L 1616 K09 K.O	16	16	125	16	
SM23079	SM23178	SCLCR/L 2020 K09 K.O	20	20	125	20	

Size Designation	Master Insert*	Spare Parts					
		Screw	Shim	Shim Screw	Torx Key	Plug	Allen Key
			-	-			
1010 - 1616	CCM. 0602..	SSV M2.5x6-9505	-	-	STK-T08-9908	-	-
1212 - 2020	CCM. 09T3..	SSV M3.5x10-9511			STK-T15-9910		
1212 - 1616-JT						SMHT M8-AA4 9261	SAK-AA4-9903

**Spare Parts Ordering Codes

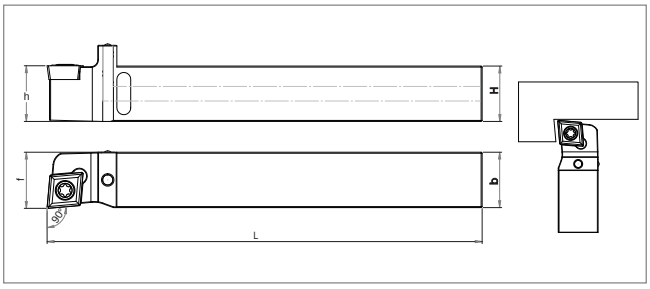

Ordering Code		Item Designation	Dimensions (mm)					Master Insert*
Direction		SCACR/L K.O-JT (90)		h=H	b	L	f	
Right	Left							
SM76532	SM76556	SCACR/L 1212 K09 KO-JT	✓	12	12	125	12	CCM. 09T3..
SM76549	SM76563	SCACR/L 1616 K09 KO-JT	✓	16	16	125	16	

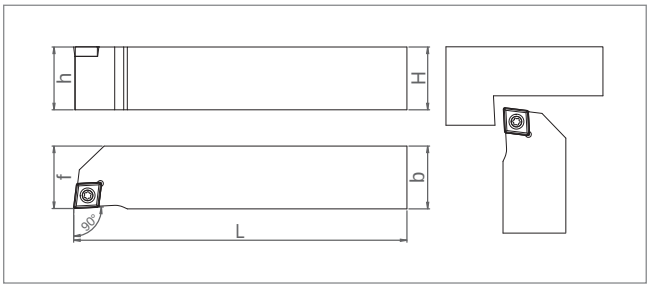

Ordering Code		Item Designation	Dimensions (mm)				Master Insert*
Direction		SCACR/L K.O (90)	h=H	b	L	f	
Right	Left						
SM55445	SM55544	SCACR/L 1010 K06 K.O	10	10	125	10	CCM. 0602..
SM55452	SM55551	SCACR/L 1212 K06 K.O	12	12	125	12	
SM55469	SM55568	SCACR/L 1616 K06 K.O	16	16	125	16	
SM55476	SM55575	SCACR/L 1212 K09 K.O	12	12	125	12	CCM. 09T3..
SM55483	SM55582	SCACR/L 1616 K09 K.O	16	16	125	16	

Size Designation	Master Insert*	Spare Parts					
		Screw	Shim	Shim Screw	Torx Key	Plug	Allen Key
			-	-			
1010 - 1616	CCM. 0602..	SSV M2.5x6-9505	-	-	STK-T08-9908	-	-
1212 - 2020	CCM. 09T3..	SSV M3.5x10-9511			STK-T15-9910		
1212 - 1616-JT						SMHT M8-AA4 9261	SAK-AA4-9903

**Spare Parts Ordering Codes

SWISS TYPE EXTERNAL TURNING TOOLS

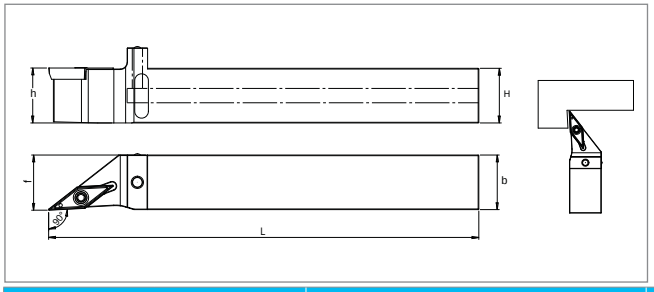

Ordering Code		Item Designation	Dimensions (mm)					Master Insert*
Direction		SVACR/L K.O-JT (90)		h=H	b	L	f	
Right	Left							
SM74538	SM74545	SVACR/L 1212 K11 KO-JT	✓	12	12	125	12	VCM. 1103..
SM74552	SM74569	SVACR/L 1616 K11 KO-JT	✓	16	16	125	16	

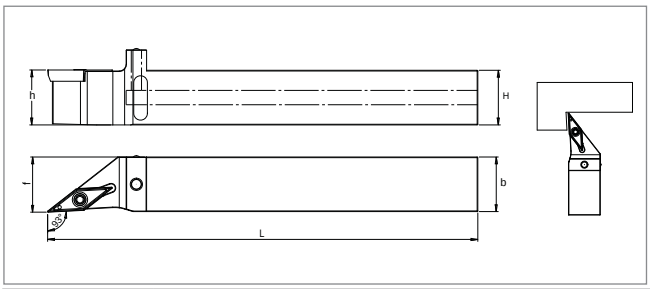

Ordering Code		Item Designation	Dimensions (mm)					Master Insert*
Direction		SVJCR/L K.O-JT (93)		h=H	b	L	f	
Right	Left							
SM74491	SM74507	SVJCR/L 1212 K11 KO-JT	✓	12	12	125	12	VCM. 1103..
SM74514	SM74521	SVJCR/L 1616 K11 KO-JT	✓	16	16	125	16	

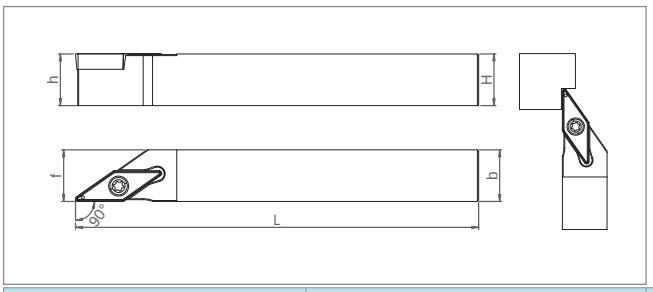

Ordering Code		Item Designation	Dimensions (mm)				Master Insert*
Direction		SVACR/L K.O (90)	h=H	b	L	f	
Right	Left						
SM45736	SM45743	SVACR/L 1212 K11 K.O	12	12	125	12	VCM. 1103..
SM45750	SM45767	SVACR/L 1616 K11 K.O	16	16	125	16	
SM45774	SM45781	SVACR/L 1616 K16 K.O	16	16	125	16	VCM. 1604..
SM45798	SM45804	SVACR/L 2020 K16 K.O	20	20	125	20	

Size Designation	Master Insert*	Spare Parts					
		Screw	Shim	Shim Screw	Torx Key	Plug	Allen Key
			-	-			
1010 - 2020	VCM. 1103..	SSV M2.5x6-9505	-	-	STK-T08-9908	-	-
1212 - 1616-JT						SMHT M8-AA4 9261	SAK-AA4-9903
1616 - 2020	VCM. 1604..	SSV M3.5x10-9511			STK-T15-9910	-	-

*Suitable Insert is ISO

**Spare Parts Ordering Codes

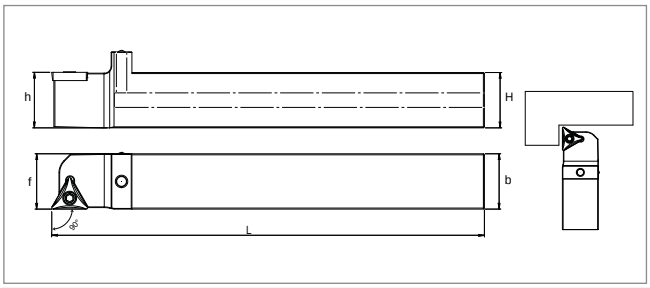

Ordering Code		Item Designation	Dimensions (mm)					Master Insert*
Direction		STGCR/L K.O (90)		h=H	b	L	f	
Right	Left							
SM74576	SM74583	STGCR/L 1212 K11 KO-JT	✓	12	12	125	12	TCM.1102..
SM74590	SM74606	STGCR/L 1616 K11 KO-JT	✓	16	16	125	16	

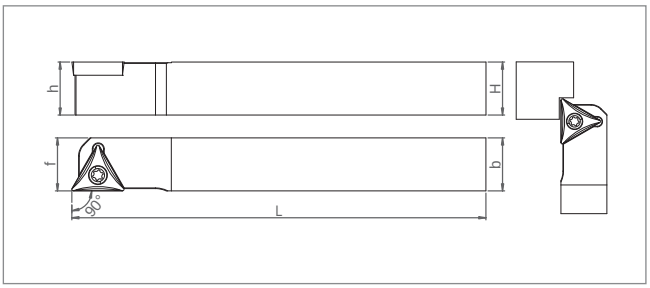

Ordering Code		Item Designation	Dimensions (mm)				Master Insert*
Direction		STGCR/L K.O (90)	h=H	b	L	f	
Right	Left						
SM45651	SM45668	STGCR/L 1212 K11 K.O	12	12	125	12	TCM.1102..
SM45675	SM45682	STGCR/L 1616 K11 K.O	16	16	125	16	
SM45699	SM45705	STGCR/L 1616 K16 K.O	16	16	125	16	TCM.1604..
SM45712	SM51492	STGCR/L 2020 K16 K.O	20	20	125	20	

Size Designation	Master Insert*	Spare Parts					
		Screw	Shim	Shim Screw	Torx Key	Plug	Allen Key
			-	-			
1010 - 1616	TCM.1102..	SSV M2.5x6-9505	-	-	STK-T08-9908	-	-
1212 - 1616-JT						SMHT M8-AA4 9261	SAK-AA4-9903
1616 - 2020	TCM.1604..	SSV M3.5x10-9511			STK-T15-9910	-	-

*Suitable Insert is ISO

**Spare Parts Ordering Codes*

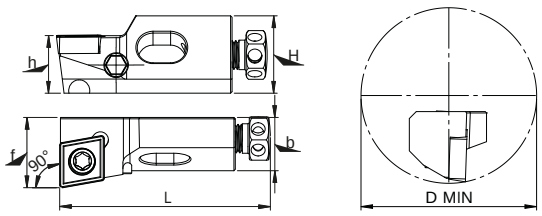

Ordering Code		Item Designation	Dimensions (mm)						Master Insert*
Direction		KT-SCFCR/L (90°)	H	h	f	b	L	D Min	
Right	Left								
SM76112	SM76150	KT06 SCFCR/L-06	8	6	8	6	25	20	CCM. 0602..
SM76129	SM76167	KT08 SCFCR/L-06	11	8	10	8	32	25	
SM76136	SM76174	KT10 SCFCR/L-09	15	10	14	11	50	40	CCM. 09T3..
SM76143	SM76181	KT12 SCFCR/L-09	20	12	20	15	55	50	

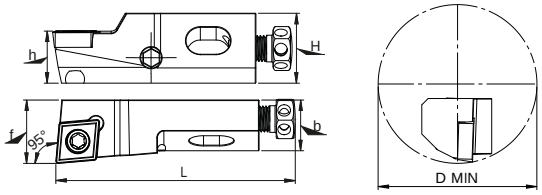

Ordering Code		Item Designation	Dimensions (mm)						Master Insert*
Direction		KT-SCLCR/L (95°)	H	h	f	b	L	D Min	
Right	Left								
SM76259	SM76280	KT08 SCLCR/L-06	11	8	10	8	32	25	CCM. 0602..
SM76266	SM76297	KT10 SCLCR/L-09	15	10	14	11	50	40	
SM76273	SM76303	KT12 SCLCR/L-09	20	12	20	15	55	50	CCM. 09T3..

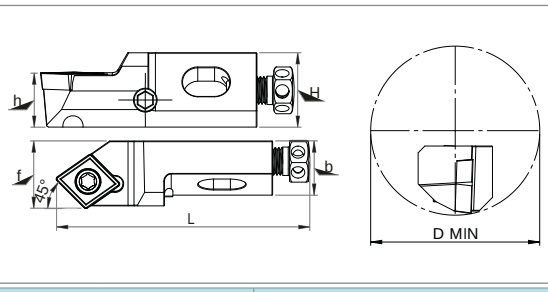

Ordering Code		Item Designation	Dimensions (mm)						Master Insert*
Direction		KT-SCSCR/L (45°)	H	h	f	b	L	D Min	
Right	Left								
SM76198	SM76228	KT06 SCSCR/L-06	8	6	8	6	25	20	CCM. 0602..
SM76204	SM76235	KT08 SCSCR/L-06	11	8	10	8	32	25	
SM76211	SM76242	KT10 SCSCR/L-09	15	10	14	11	50	40	CCM. 09T3..

Size Designation	Master Insert*	Spare Parts	
		Screw	Torx Key
KT06 - KT08	CCM. 0602..	SSV M2.5x6-9505	STK-T08-9908
KT10 - KT12	CCM. 09T3..	SSV M3.5x10-9511	STK-T15-9910

*Suitable Insert is ISO

**Spare Parts Ordering Codes

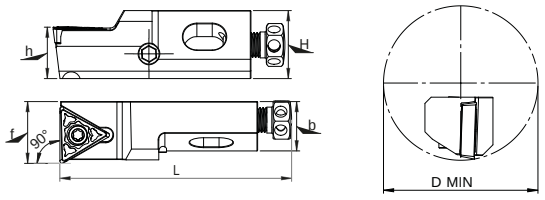

Ordering Code		Item Designation	Dimensions (mm)						Master Insert*
Direction		KT-STFCR/L (90°)	H	h	f	b	L	D Min	
Right	Left								
SM76310	SM76341	KT08 STFCR/L-09	11	8	10	8	32	25	TCM.0902..
SM76327	SM76358	KT10 STFCR/L-11	15	10	14	11	50	40	TCM.1102..
SM76334	SM76365	KT12 STFCR/L-16	20	12	20	15	55	50	TCM.16T3..

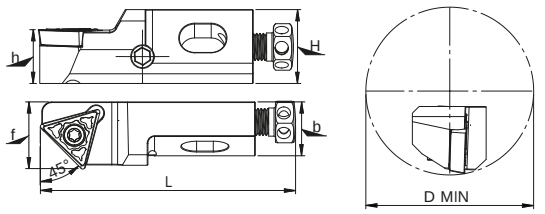

Ordering Code		Item Designation	Dimensions (mm)						Master Insert*
Direction		KT-STSCR/L (45°)	H	h	f	b	L	D Min	
Right	Left								
SM76372	SM76402	KT08 STSCR/L-09	11	8	10	8	32	25	TCM.0902..
SM76389	SM76419	KT10 STSCR/L-11	15	10	14	11	50	40	TCM.1102..
SM76396	SM76426	KT12 STSCR/L-16	20	12	20	15	55	50	TCM.16T3..

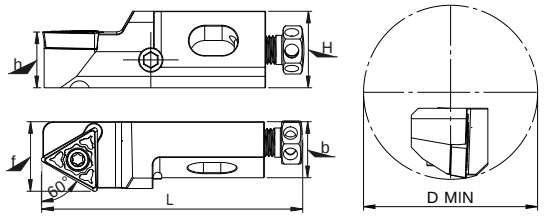

Ordering Code		Item Designation	Dimensions (mm)						Master Insert*
Direction		KT-STTCR/L (60°)	H	h	f	b	L	D Min	
Right	Left								
SM76433	SM76464	KT08 STTCR/L-09	11	8	10	8	32	25	TCM.0902..
SM76440	SM76471	KT10 STTCR/L-11	15	10	14	11	50	40	TCM.1102..
SM76457	SM76488	KT12 STTCR/L-16	20	12	20	15	55	50	TCM.16T3..

Size Designation	Master Insert*	Spare Parts	
		Screw	Torx Key
KT08	TCM.0902..	SSV M2.2x5-9503	STK-T06-9906
KT10	TCM.1102..	SSV M2.5x6-9505	STK-T08-9908
KT12	TCM.16T3..	SSV M3.5x10-9511	STK-T15-9910

**Spare Parts Ordering Codes

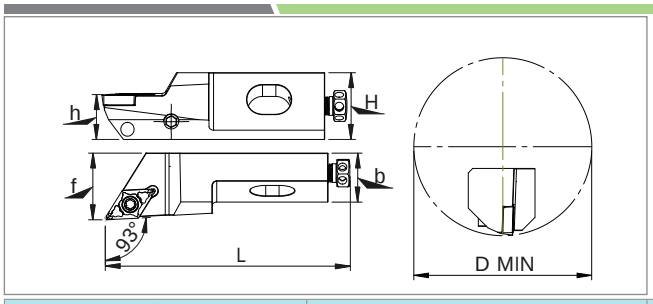

Ordering Code		Item Designation	Dimensions (mm)						Master Insert*
Direction		*KT-SDJCR/L (93°)*	*H*	*h*	*f*	*b*	*L*	*D Min*	
Right	*Left*								
SM76495	SM76518	KT10 SDJCR/L-07	15	10	15	11	50	40	DCM. 0702..
SM76501	SM76525	KT12 SDJCR/L-11	20	12	20	15	55	50	DCM. 11T3..

Size Designation	Master Insert*	Spare Parts	
		Screw	Torx Key
KT10	DCM. 0702..	SSV M2.5x6-9505	STK-T08-9908
KT12	DCM. 11T3..	SSV M3.5x10-9511	STK-T15-9910

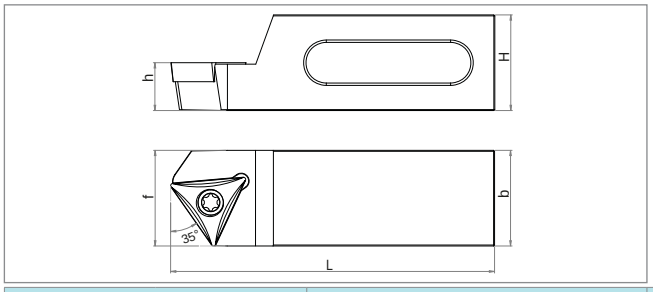

Ordering Code		Item Designation	Dimensions (mm)					Master Insert*
Direction		*STXCR/L (35°)*	*H*	*h*	*f*	*b*	*L*	
Right	*Left*							
SM77324	SM77355	STXCR/L 2020 B16	20	10	20	20	45	TCM.16T3..
SM77331	SM77362	STXCR/L 2020 E16	20	10	20	20	70	
SM77348	SM77379	STXCR/L 2020 H16	20	10	20	20	100	

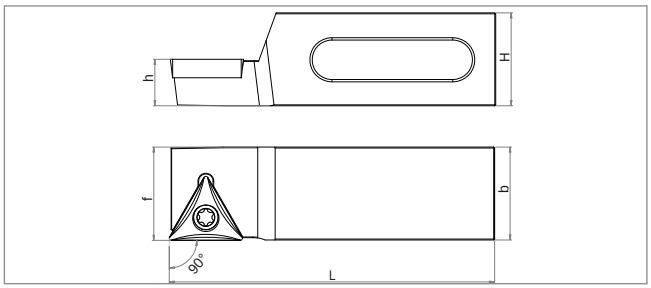

Ordering Code		Item Designation	Dimensions (mm)					Master Insert*
Direction		*STGCR/L (90°)*	*H*	*h*	*f*	*b*	*L*	
Right	*Left*							
SM77386	SM77416	STGCR/L 2020 B16	20	10	20	20	45	TCM.16T3..
SM77393	SM77423	STGCR/L 2020 E16	20	10	20	20	70	
SM77409	SM77430	STGCR/L 2020 H16	20	10	20	20	100	

Size Designation	Master Insert*	Spare Parts	
		Screw	Torx Key
2020	TCM.16T3..	SSV M3.5x8-9510 SSV M3.5x10-9511	STK-T15-9910

*Suitable Insert is ISO
**Spare Parts Ordering Codes

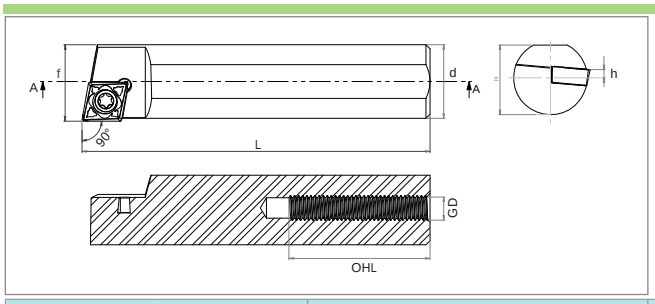

Ordering Code		Item Designation	Dimensions (mm)							Master Insert*
Direction		S-SCACR/L (90°)	d	h	f	H	L	OHL	GD	
Right	Left									
SM77744	SM77867	S1848 SCACR/L-09	18	2	18.65	17	48	30	M6x1	CCM. 09T3..
SM77751	SM77874	S1867 SCACR/L-09	18	2	18.65	17	67	35	M6x1	
SM77768	SM77881	S1885 SCACR/L-09	18	2	18.65	17	85	35	M6x1	
SM77775	SM77898	S18105 SCACR/L-09	18	2	18.65	17	105	35	M6x1	
SM77782	SM77904	S18175 SCACR/L-09	18	2	18.65	17	175	35	M6x1	
SM77799	SM77911	S1632 SCACR/L-09	16	2	16.65	15	32	15	M6x1	
SM77805	SM77928	S1640 SCACR/L-09	16	2	16.65	15	40	20	M6x1	
SM77812	SM77935	S1650 SCACR/L-09	16	2	16.65	15	50	30	M6x1	
SM77829	SM77942	S1660 SCACR/L-09	16	2	16.65	15	60	35	M6x1	
SM77836	SM77959	S1670 SCACR/L-09	16	2	16.65	15	70	35	M6x1	
SM77843	SM77966	S1690 SCACR/L-09	16	2	16.65	15	90	35	M6x1	
SM77850	SM77973	S16100 SCACR/L-09	16	2	16.65	15	100	35	M6x1	

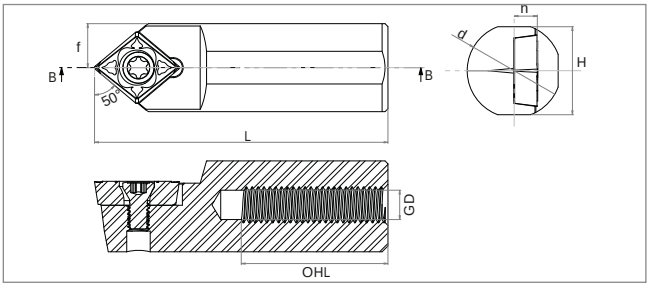

Ordering Code	Item Designation	Dimensions (mm)							Master Insert*
Direction	S-SCMCN (50°)	d	h	f	H	L	OHL	GD	
Neutral									
SM77980	S1025 SCMCN-06	10	1	5	9	25	10	M5x0.8	CCM. 0602..
SM77997	S1032 SCMCN-06	10	1	5	9	32	15	M5x0.8	
SM78000	S1040 SCMCN-06	10	1	5	9	40	20	M5x0.8	
SM78017	S1050 SCMCN-06	10	1	5	9	50	25	M5x0.8	
SM78024	S1060 SCMCN-06	10	1	5	9	60	25	M5x0.8	
SM78031	S1650 SCMCN-09	16	2	8	15	60	25	M6x1	CCM. 09T3..

Size Designation	Master Insert*	Spare Parts	
	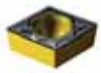	Screw	Torx Key
S1025 - S1060	CCM. 0602..	SSV M2.5x6-9505	STK-T08-9908
S1848 - S16100	CCM. 09T3..	SSV M3.5x8-9510	STK-T15-9910

*Suitable Insert is ISO
**Spare Parts Ordering Codes

CARTRIDGE TYPE TURNING TOOLS

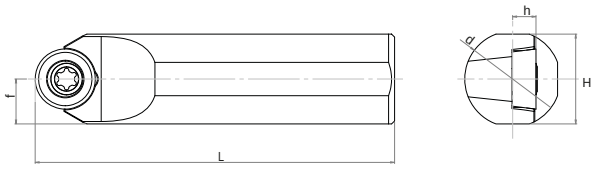

Ordering Code	Item Designation	Dimensions (mm)					Master Insert*
Direction	*S-SRDCN (-)*	*d*	*h*	*f*	*H*	*L*	
Neutral							
SM78048	S1260 SRDCN-10	12	3.9	6	11	60	RC.T 10T3..
SM78055	S1460 SRDCN-10	14	3.9	7	13	60	
SM78062	S1660 SRDCN-10	16	3.9	8	15	60	

Size Designation	Master Insert*	Spare Parts	
		Screw	Torx Key
S1025 - S1060	RC.T 10T3..	SSV M3.5x10-9511	STK-T15-9910

*Suitable Insert is ISO

***Spare Parts Ordering Codes*

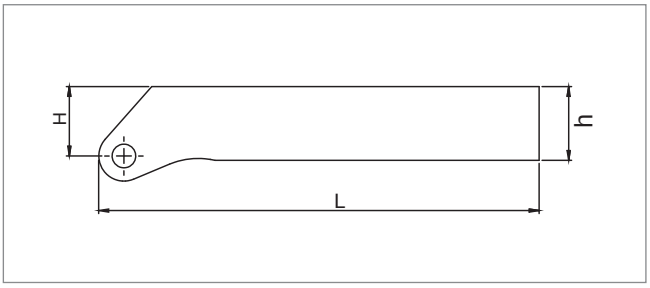

Ordering Code	Item Designation	Dimensions (mm)				Master Insert*
Direction	*CENTERING TOOLS*	*H*	*h*	*L*		
-						
SM20542	2020 CCT 2.5x6	20	20	125	SNSV M5x8 9306	SAK-AA2.5-9912
SM39407	2020 CCT 2.5x6.30	20	20	125		
SM27886	2525 CCT 2.5x6.30	25	25	150		
SM20573	2525 CCT 2.5x6	25	25	150		
SM20559	2020 CCT 3.15x8	20	20	125		
SM20580	2525 CCT 3.15x8	25	25	150		
SM20566	2020 CCT 4x10	20	20	125		
SM20597	2525 CCT 4x10	25	25	150	SNSV M6x10 9308	SAK-AA3-9902

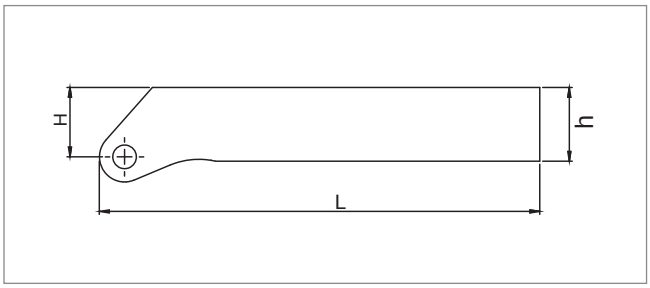

Ordering Code	Item Designation	Dimensions (mm)			
	CNC KNURLING TOOLS	*h*	*H*	*L*	*Spare Parts*
SM20528	2020 CKTT 20x10	20	20	125	TMP1 6x20-9314
SM61019	2020 CKTT 20x8	20	20	125	
SM20535	2525 CKTT 20x10	25	25	150	TMP2 6x24-9315
SM61026	2525 CKTT 20x8	25	25	150	

***Spare Parts Ordering Codes*

NOTES

SMOXH®
CUTTING TOOLS

Internal Turning Tools

B

- **T System** Internal Turning Tools
- **P System** Internal Turning Tools
- **M System** Internal Turning Tools
- **S System** Internal Turning Tools
- **C System** Internal Turning Tools

İç çap Tornalama Takım Tutucu kodlamaları / Internal tool Holder Code System(ISO)

1	2	3	4	5	6	7	8		9
S	25	S	T	D	U	N	R	-	15
Takım tipi Type of tools	**Takım çapı** Diameter of tool	**Takım boyu** Length of tool	**Elmas Sıkma sistemi** Clamping system of insert	**Elmas şekli** Shape of insert	**Takım kesme açısı** Cutting angle of tools	**Elmas boşaltma açısı** Clearance Angle of insert	**Takım yönü** Hand of tools		**Elmas kesme uzunluğu** Length of Insert Cutting Edge

1 Takım tipi / Tyep of tool

S 25 S T D U N R - 15

A=**Çelik gövdeli içten su vermeli** / A=Steel body and with coolant hole
S=**Çelik gövdeli** / A=Steel body
E=**Karbür Gövdeli** / E=Carbide Shank

2 Takım çapı / Diameter of tool

S 25 S T D U N R -15

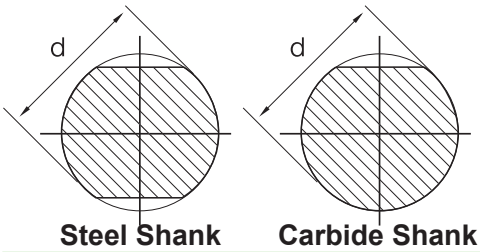

3 Takım boyu / Length of tools

S 25 S T D U N R - 15

length(L)	(mm)	length(L)	(mm)
H	100	S	250
K	125	T	300
M	150	U	350
N	160	V	400
R	200		

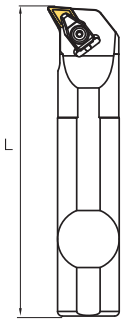

4 Elmas sıkma sistemi / Clamping system of insert

S 25 S T D U N R - 15

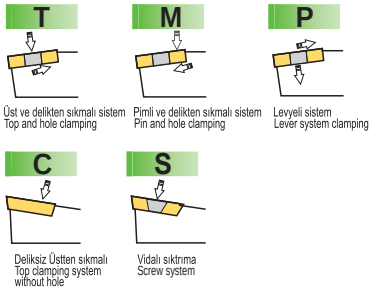

5 Takım kesme açısı / Cutting angle of tool

S 25 S T D U N R - 15

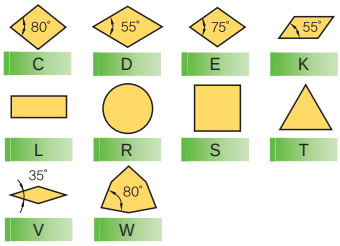

6 Takım kesme açısı / Cutting angle of tool

S 25 S T D U N R - 15

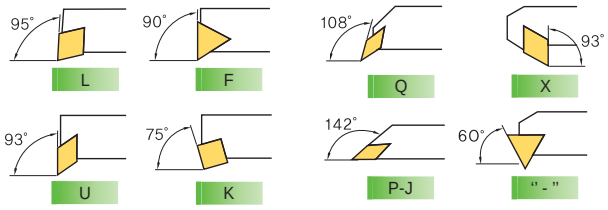

7 Şaft Genişliği / Height of Shank

S 25 S T D U N R - 15

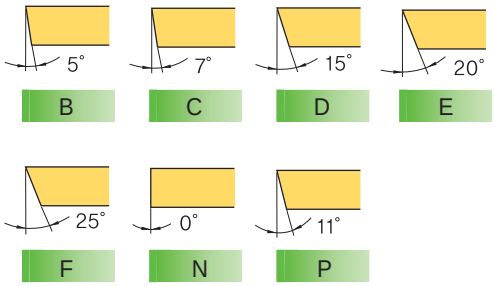

8 Takım yönü / Hand of tool

S 25 S T D U N R - 15

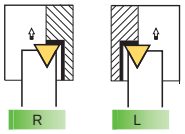

9 Elmas kesme yönü / Length of Insert Cutting Edge

S 25 S T D U N R - 15

Insert			DNM. 1104.. ISO	DNM. 1506.. ISO	DNM. 1104.. ISO	DNM. 1506.. ISO	DNM. 1104.. ISO	DNM. 1506.. ISO	DNM. 1506.. ISO
Size (mm)			Ø25 - Ø32	Ø25 - Ø50	Ø25 - Ø32	Ø25 - Ø50	Ø25	Ø25 - Ø50	Ø32
ISO Code			TDUN R/L	TDUN R/L PDUN R/L MDUN R/L	TDQN R/L	TDQN R/L PDQN R/L	TD-N R/L	TD-N R/L	PDXN R/L
Cutting Angle			93°	93°	107.5°	107.5°	62.5°	62.5°	93°
Clamping Type	**T System**	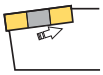	✓ Size Range (mm) Ø25 - Ø32	✓ Size Range (mm) Ø25 - Ø50	Size Range (mm) Ø25 - Ø32	✓ Size Range (mm) Ø25 - Ø50	✓ Size Range (mm) Ø25	Size Range (mm) Ø32 - Ø50	-
	Page		**B99**	**B98**	**B98**	**B98**	**B99**	**B99**	-
	Anti Vibration	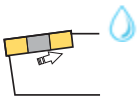	✓ Size Range (mm) Ø32	✓ Size Range (mm) Ø40					
	Page		**B93**	**B93**					
	P System	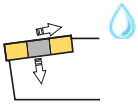	-	✓ Size Range (mm) Ø32 - Ø50	-	✓ Size Range (mm) Ø25 - Ø50	-	✓ Size Range (mm) Ø32 - Ø50	✓ Size Range (mm) Ø32
	Page			**B104**		**B104**		**B105**	**B105**
	A System (inner hole)	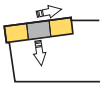	-	✓ Size Range (mm) Ø32	-	✓ Size Range (mm) Ø25- Ø32	-	-	-
	Page			**B104**		**B104**			
	M System	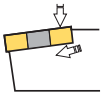	-	✓ Size Range (mm) Ø25 - Ø32	-	-	-	-	-
	Page			**B110**					

Insert			WNM. 0604.. ISO	WNM. 0804.. ISO	CNM. 1204.. ISO	CNM. 1606.. ISO	CNM. 1909.. ISO	SNM. 1204.. ISO
Size (mm)			Ø20 - Ø32	Ø25 - Ø50	Ø20 - Ø50	Ø32 - Ø50	Ø40 - Ø50	Ø25 - Ø50
ISO Code			TWLN R/L MWLN R/L	TWLN R/L PWLN R/L MWLN R/L	TCLN R/L PCLN R/L MCLN R/L	TCLN R/L PCLN R/L	TCLN R/L PCLN R/L	TSKN R/L PSKN R/L
Cutting Angle			95°	95°	95°	95°	95°	75°
Clamping Type	**T System**	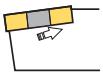	✓ Size Range (mm) Ø20 - Ø32	✓ Size Range (mm) Ø25 - Ø50	✓ Size Range (mm) Ø20 - Ø50	✓ Size Range (mm) Ø32- Ø50	✓ Size Range (mm) Ø40 - Ø50	✓ Size Range (mm) Ø25- Ø50
	Page		**B99**	**B99**	**B100**	**B100**	**B100**	**B101**
	P System	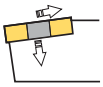	-	✓ Size Range (mm) Ø25 - Ø50	✓ Size Range (mm) Ø25 - Ø40	✓ Size Range (mm) Ø32- Ø50	✓ Size Range (mm) Ø40 - Ø50	✓ Size Range (mm) Ø25- Ø40
	Page			**B109**	**B106**	**B106**	**B106**	**B107**
	Anti Vibration	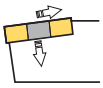	-	✓ Size Range (mm) Ø32- Ø40	✓ Size Range (mm) Ø32- Ø40	-	-	-
	Page			**B92**	**B92**			
	A System (inner hole)	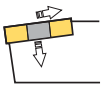	-	✓ Size Range (mm) Ø25- Ø32	✓ Size Range (mm) Ø25- Ø32	✓ Size Range (mm) Ø25- Ø32	-	✓ Size Range (mm) Ø25- Ø32
	Page			**B109**	**B106**	**B106**		**B106**
	M System	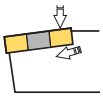	✓ Size Range (mm) Ø16 - Ø25	✓ Size Range (mm) Ø25 - Ø50	✓ Size Range (mm) Ø25 - Ø32	-	-	
	Page		**B111**	**B111**	**B110**			

Insert			SNM. 1506.. ISO	VNM. 1604.. ISO	TNM. 1604.. ISO	TNM. 2204.. ISO	TNM. 1604.. ISO	TNM. 2204.. ISO
Size (mm)			Ø25 - Ø50	Ø25 - Ø50	Ø20 - Ø40	Ø32 - Ø50	Ø20 - Ø40	Ø32 - Ø50
ISO Code			TSKN R/L PSKN R/L	TVUN R/L	TTUN R/L MTUN R/L	TTUN R/L MTUN R/L PTUN R/L	MTQN R/L	MTQN R/L
Cutting Angle			75°	93°	93°		107.5°	107.5°
Clamping Type	**T System**	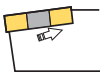	✓ Size Range (mm) Ø25- Ø50	✓ Size Range (mm) Ø25- Ø50	✓ Size Range (mm) Ø25- Ø32	Size Range (mm) Ø32- Ø50	-	-
	Page		**B101**	**B101**	**B102**	**B102**		
	P System	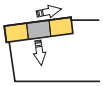	✓ Size Range (mm) Ø32- Ø50	-	-	✓ Size Range (mm) Ø32- Ø40	-	-
	Page		**B107**			**B108**		
	A System (inner hole)	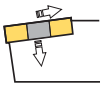	✓ Size Range (mm) Ø32	✓ Size Range (mm) Ø25 - Ø32	-	-	-	-
	Page		**B101**	**B101**				
	M System	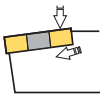	-	-	✓ Size Range (mm) Ø20- Ø40	✓ Size Range (mm) Ø32- Ø50	✓ Size Range (mm) Ø20- Ø40	✓ Size Range (mm) Ø32- Ø50
	Page				**B111**	**B111**	**B111**	**B111**
	C System	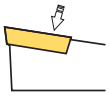	-	-	-	-	-	-
	Page							

Insert			TNM. 1604.. ISO	TNM. 2204.. ISO	KNUX. 1604.. ISO			
Size (mm)			Ø25 - Ø40	Ø32 - Ø50	Ø25 - Ø50			
ISO Code			TT-N R/L MT-N R/L	MT-N R/L	CKUN R/L			
Cutting Angle			60°	60°	93°			
Clamping Type	**T System**	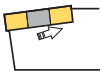	-	-	-			
	Page							
	P System	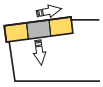	-	-	-			
	Page							
	M System	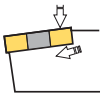	✓ Size Range (mm) Ø25- Ø40	✓ Size Range (mm) Ø32- Ø50	-			
	Page		**B112**	**B112**				
	C System	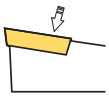	-	-	✓ Size Range (mm) Ø25- Ø50			
	Page				**B113**			
	S System	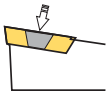	-	-	-			
	Page							

Insert			DCM. 0702.. ISO	DCM. 11T3.. ISO	DCM. 0702.. ISO	DCM. 11T3.. ISO	DCM. 0702.. ISO	DCM. 11T3.. ISO
Size (mm)			Ø10 - Ø20	Ø16 - Ø40	Ø10 - Ø20	Ø16 - Ø40	Ø10 - Ø12	Ø16 - Ø40
ISO Code			SDUC R/L	SDUC R/L	SDQC R/L	SDQC R/L	SDPC R/L	SDPC R/L
Cutting Angle			93°	93°	107.5°	107.5°	117.5°	117.5°
Clamping Type	**T System**	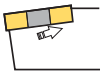	-	-	-	-	-	-
	Page							
	Anti Vibration	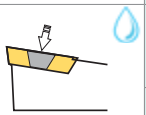	-	✓ Size Range (mm) Ø25- Ø40	-	✓ Size Range (mm) Ø25- Ø40	-	-
	Page			**B93**		**B93**		
	S System	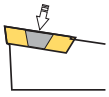	✓ Size Range (mm) Ø10- Ø20	✓ Size Range (mm) Ø16- Ø40	✓ Size Range (mm) Ø10- Ø20	✓ Size Range (mm) Ø16- Ø40	✓ Size Range (mm) Ø10- Ø12	✓ Size Range (mm) Ø16- Ø40
	Page		**B122**	**B122**	**B125**	**B125**	**B126**	**B126**
	A System (inner hole)	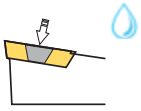	✓ Size Range (mm) Ø10- Ø16	✓ Size Range (mm) Ø16- Ø32	✓ Size Range (mm) Ø10- Ø16	✓ Size Range (mm) Ø16- Ø32	-	-
	Page		**B120**	**120**	**B123**	**B123**		
	E System (Carbide Shank)	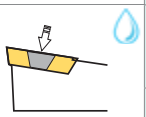	✓ Size Range (mm) Ø10- Ø12	✓ Size Range (mm) Ø16- Ø20	✓ Size Range (mm) Ø10- Ø12	✓ Size Range (mm) Ø16- Ø20	-	-
	Page		**B121**	**B121**	**B124**	**B124**		

Insert			DCM. 0702.. ISO	DCM. 11T3.. ISO	DCM. 0702.. ISO	DCM. 11T3.. ISO	VBM. 1103.. ISO	VBM. 1604.. ISO
Size (mm)			Ø12	Ø16 - Ø40	Ø10 - Ø16	Ø16 - Ø40	Ø16 - Ø20	Ø25 - Ø40
ISO Code			SDXC R/L	SDXC R/L	SD-C R/L	SD-C R/L	SVUB R/L	SVUB R/L
Cutting Angle			93°	93°	62.5°	62.5°	93°	93°
Clamping Type	**T System**	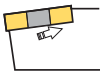	-	-	-	-	-	-
	Page							
	Anti Vibration	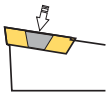	-	-	-	-	-	✓ Size Range (mm) Ø25- Ø40
	Page							**B93**
	S System	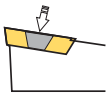	✓ Size Range (mm) Ø12	✓ Size Range (mm) Ø16- Ø40	✓ Size Range (mm) Ø10- Ø16	✓ Size Range (mm) Ø16- Ø40	✓ Size Range (mm) Ø16 - Ø20	✓ Size Range (mm) Ø25- Ø40
	Page		**B127**	**B127**	**B126**	**B126**	**B128**	**B128**
	A System (inner hole)	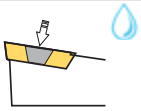	✓ Size Range (mm) Ø12	✓ Size Range (mm) Ø16- Ø40	-	-	-	-
	Page		**B127**	**B127**				
	E System (Carbide Shank)	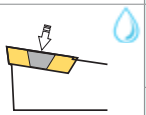	-	-	-	-	-	-
	Page							

Insert			VBM. 1103.. ISO	VBM. 1604.. ISO	VBM. 1604.. ISO	VBM. 1103.. ISO	VBM. 1604.. ISO	VBM. 1604.. ISO	VBM. 1604.. ISO
Size (mm)			Ø16 - Ø20	Ø25 - Ø40	Ø25 - Ø40	Ø16 - Ø20	Ø25 - Ø40	Ø25 - Ø32	Ø25 - Ø32
ISO Code			SVQB R/L	SVQB R/L	SVJB R/L	SVXB R/L	SVXB R/L	SVXB R/L	SV-B R/L
Cutting Angle			107.5°	107.5°	93°	52°	52°	52°	72.5°
Clamping Type	**T System**	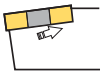	-	-	-	-	-	-	-
	Page								
	P System	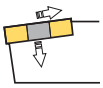	-	-	-	-	-	-	-
	Page								
	S System	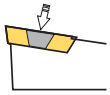	✓ Size Range (mm) Ø16 - Ø20	✓ Size Range (mm) Ø25- Ø40	✓ Size Range (mm) Ø25- Ø40	✓ Size Range (mm) Ø16- Ø20	✓ Size Range (mm) Ø25 - Ø40	✓ Size Range (mm) Ø25- Ø32	✓ Size Range (mm) Ø25- Ø32
	Page		**B128**	**B128**	**B129**	**B129**	**B129**	**B129**	**B129**
	A System (inner hole)	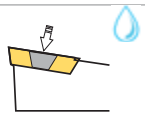	-	-	-	-	-	-	
	Page								
	E System (Carbide Shank)	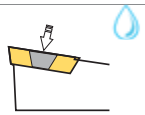	-	-	-	-	-	-	
	Page								

Insert			VCM. 1103.. ISO	VCM. 1604.. ISO	VCM. 1103.. ISO	VCM. 1604.. ISO	CCM. 0602.. ISO	CCM. 09T3.. ISO
Size (mm)			Ø16 - Ø20	Ø25 - Ø40	Ø16 - Ø20	Ø25 - Ø40	Ø08 - Ø16	Ø12 - Ø40
ISO Code			SVUC R/L	SVUC R/L	SVQC R/L	SVQC R/L	SCLC R/L	SCLC R/L
Cutting Angle			93°	93°	107.5°	107.5°	95°	95°
Clamping Type	**T System**	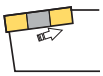	-	-	-	-	-	-
	Page							
	Anti Vibration	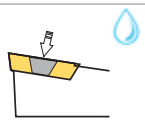	-	✓ Size Range (mm) Ø25- Ø40	-	-	-	✓ Size Range (mm) Ø25- Ø40
	Page			**B95**				**B93**
	S System	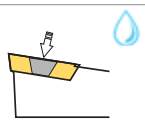	✓ Size Range (mm) Ø16 - Ø20	✓ Size Range (mm) Ø25- Ø40	✓ Size Range (mm) Ø16 - Ø20	✓ Size Range (mm) Ø25- Ø40	✓ Size Range (mm) Ø08 - Ø16	✓ Size Range (mm) Ø12- Ø32
	Page		**B130**	**B130**	**B130**	**B131**	**B133**	**B133**
	A System (inner hole)	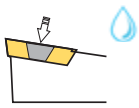	-	-	-	-	✓ Size Range (mm) Ø08 - Ø12	✓ Size Range (mm) Ø16- Ø32
	Page						**B131**	**B131**
	E System (Carbide Shank)	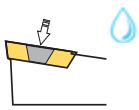	-	-	-	-	✓ Size Range (mm) Ø08 - Ø12	✓ Size Range (mm) Ø12- Ø20
	Page						**B132**	**B132**

Insert			CCM. 1204.. ISO	CCM. 0602.. ISO	CCM. 09T3.. ISO	CCM. 1204.. ISO	SCM. 09T3.. ISO	SCM. 1204.. ISO
Size (mm)			Ø25 - Ø40	Ø08 - Ø12	Ø12 - Ø25	Ø25 - Ø40	Ø16 - Ø25	Ø25 - Ø40
ISO Code			SCLC R/L	SCFC R/L	SCFC R/L	SCFC R/L	SSSCR/L	SSSCR/L
Cutting Angle			95°	90°	90°	90°	45°	45°
Clamping Type	**T System**	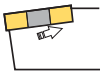	-	-	-	-	-	-
	Page							
	P System	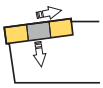	-	-	-	-	-	-
	Page							
	Anti Vibration	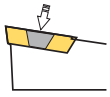	-	-	-	-	-	-
	Page							
	A System (inner hole)	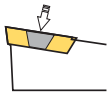	-	✓ Size Range (mm) Ø08- Ø12	✓ Size Range (mm) Ø16	-	-	-
	Page			**B134**	**B134**			
	S System	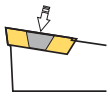	✓ Size Range (mm) Ø25 - Ø40	✓ Size Range (mm) Ø08 - Ø12	✓ Size Range (mm) Ø12- Ø25	✓ Size Range (mm) Ø25 - Ø40	✓ Size Range (mm) Ø16 - Ø25	✓ Size Range (mm) Ø25- Ø40
	Page		**B133**	**B134**	**B134**	**B134**	**B135**	**B135**

Insert			TCM. 0902.. ISO	TCM. 1102.. ISO	TCM. 16T3.. ISO	TCM. 06T1.. ISO	TCM. 0902.. ISO	TCM. 1102.. ISO
Size (mm)			Ø10 - Ø12	Ø10 - Ø20	Ø16 - Ø40	Ø08	Ø10 - Ø12	Ø10 - Ø20
ISO Code			STUC R/L	STUC R/L	STUC R/L	STFC R/L	STFC R/L	STFC R/L
Cutting Angle			93°	93°	93°	90°	90°	90°
Clamping Type	**T System**	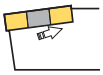	-	-	-	-	-	-
	Page							
	Anti Vibration	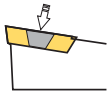	-	-	-	-	-	-
	Page							
	S System	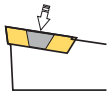	✓ Size Range (mm) Ø10 - Ø12	✓ Size Range (mm) Ø10 - Ø20	✓ Size Range (mm) Ø16- Ø40	✓ Size Range (mm) Ø08	✓ Size Range (mm) Ø10 - Ø12	✓ Size Range (mm) Ø10 - Ø20
	Page		**B137**	**B137**	**B137**	**B137**	**B137**	**B137**
	A System (inner hole)	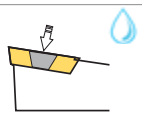	-	-	-	-	-	-
	Page							
	E System (Carbide Shank)	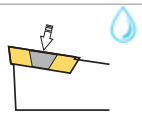	✓ Size Range (mm) Ø10 - Ø12	✓ Size Range (mm) Ø12 - Ø16	-	-	-	-
	Page		**B136**	**B136**				

Insert			TCM. 16T3.. ISO	TCM. 0902.. ISO	TCM. 1102.. ISO	TCM. 16T3.. ISO	RC.M. 0803.. ISO	WCM. 0303.. ISO
Size (mm)			Ø16 - Ø40	Ø12	Ø12 - Ø20	Ø16 - Ø40	Ø16 - Ø32	Ø08 - Ø10
ISO Code			STFC R/L	ST-C R/L	ST-C R/L	ST-C R/L	SRGC R/L	SWLC R/L
Cutting Angle			90°	60°	60°	60°	-	95°
Clamping Type	**T System**	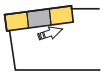	-	-	-	-	-	-
	Page							
	P System	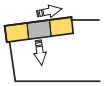	-	-	-	-	-	-
	Page							
	Anti Vibration	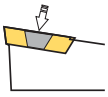	✓ Size Range (mm) Ø25- Ø40	-	-	-	-	-
	Page		**B96**					
	A System (inner hole)	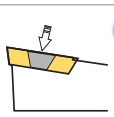	-	-	-	-	✓ Size Range (mm) Ø16 - Ø25	-
	Page						**B139**	
	S System	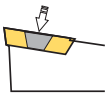	✓ Size Range (mm) Ø16- Ø40	✓ Size Range (mm) Ø12	✓ Size Range (mm) Ø12- Ø20	✓ Size Range (mm) Ø16 - Ø40	✓ Size Range (mm) Ø16 - Ø32	✓ Size Range (mm) Ø08 - Ø10
	Page		**B137**	**B138**	**B138**	**B138**	**B139**	**B139**

A System JetBar

For smooth chip evacuation
special overflowed chip evacuation channels.

For chip breaking
improved chip breaker form.

Insert life
effective direct liquid cooling hole.

- Perfect insert bearing.
- **Aerodynamic structure.**
- Special steel developed against deflection and vibration.
- **Special surface hardness developed for long tool life.**

SMOXH®
CUTTING TOOLS
The Rising Power of Quality

ANTI-VIBRATION BORING BARS

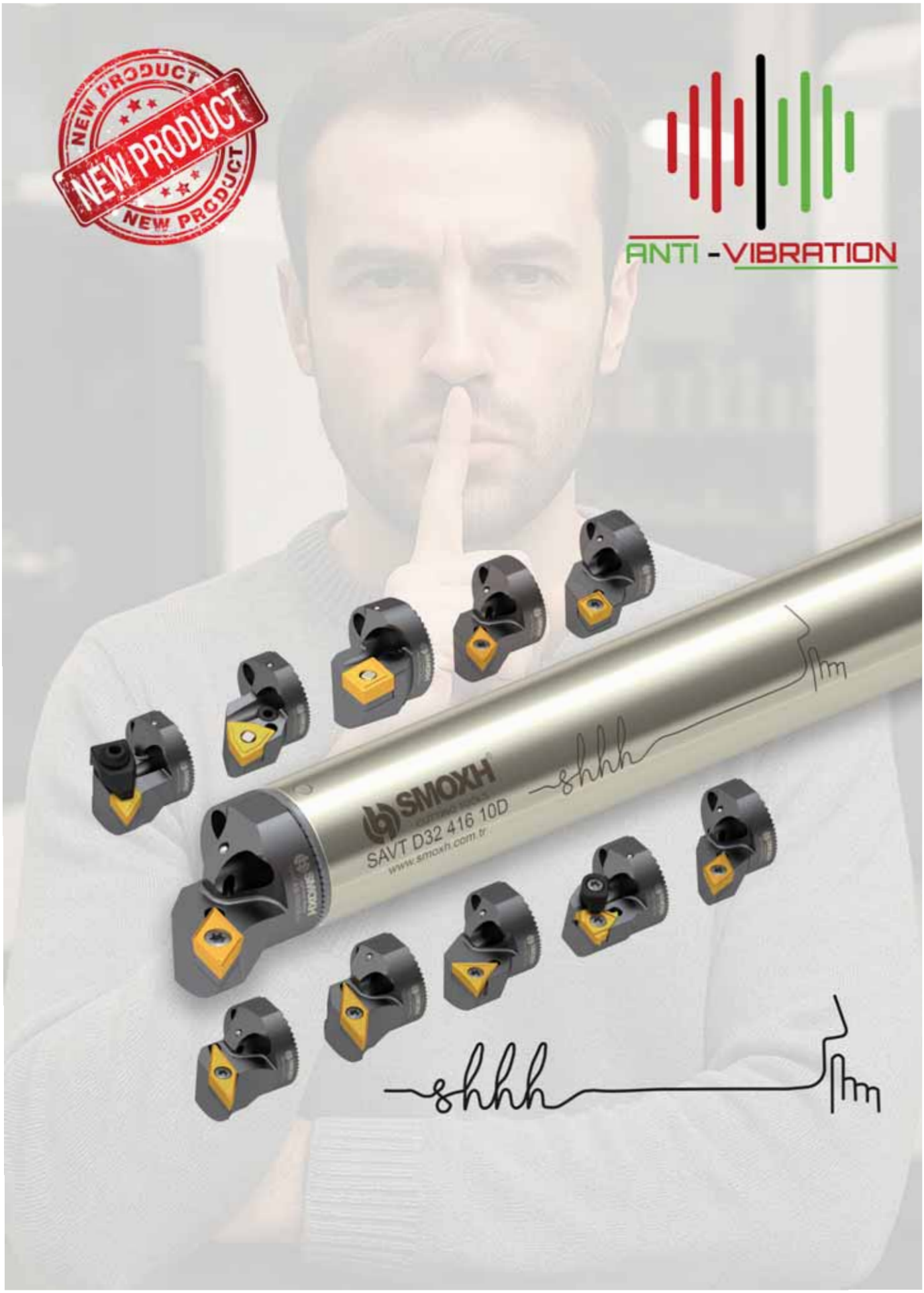

ANTI-VIBRATION BORING BARS

SMOXH® CUTTING TOOLS
Kalitenin Yükselen Gücü

User Manuel / Kullanım Klavuzu

Main Details / Detaylar

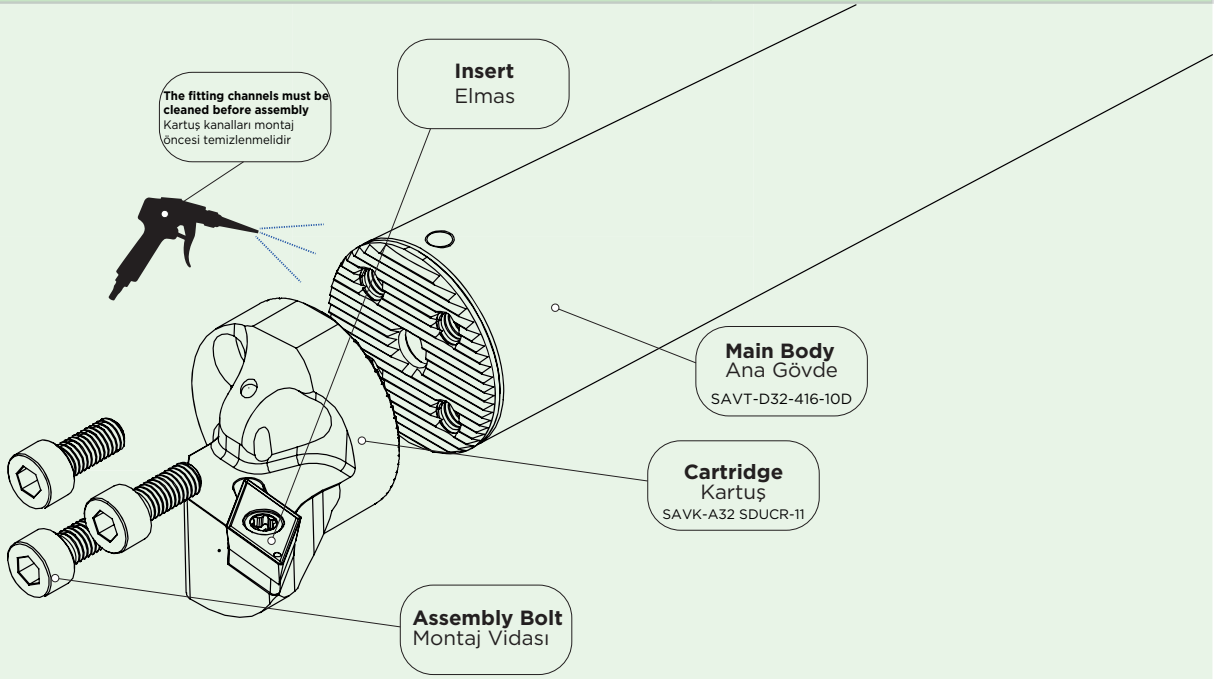

Holder Block Installation / Tutucu Blok Kurulumu

- **Sufficient clamping length extends tool life and ensures precision.**
- **Equal tightening torque should be applied during clamping, and manufacturer recommendations should be followed.**
- **Clamping surfaces should be clean and free of swarf.**
- **Shorter clamping increases the risk of vibration and negatively affects machining quality.**
- **The tool shank should be clamped for a minimum of 4xD (four times the diameter length).**

- Yeterli bağlama boyu, takım ömrünü uzatır ve hassasiyet sağlar.
- Bağlama sırasında eşit sıkma torku uygulanmalı, üretici önerileri dikkate alınmalıdır.
- Bağlama yüzeyleri temiz ve talaştan arındırılmış olmalıdır.
- Daha kısa bağlama, titreşim riskini artırır ve işleme kalitesini olumsuz etkiler.
- Takım şaftı, minimum 4xD (dört çap uzunluğu) boyunca bağlanmalıdır.

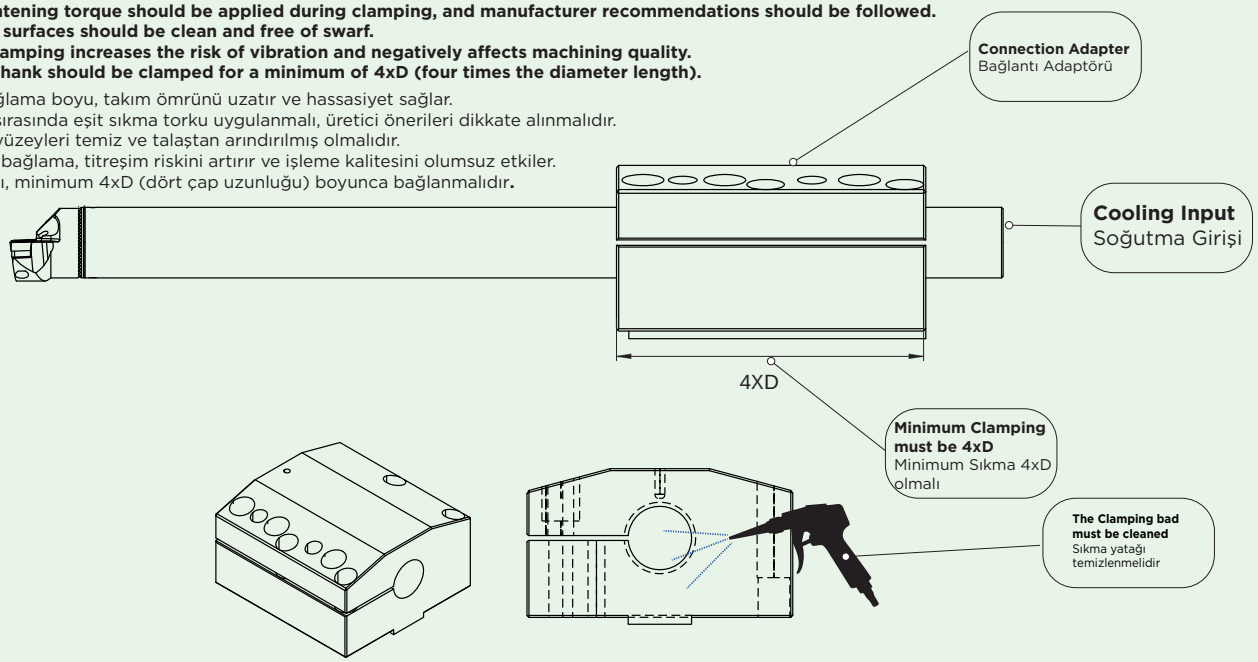

High Performance Easy Sleeve / Yüksek Performanslı Kovan

- **Easy Sleeve (Recommended Sleeve Option)**
- **Easy Sleeve stands out for its ease and practicality of installation.**
- **Designed specifically for anti-vibration assemblies to avoid block replacement, these sleeves save time thanks to their quick installation features.**

Advantages:

- **Easy and quick installation**
- **Practical use and low maintenance requirements**

- Easy Kovan (Önerilen Kovan Seçeneği)
- Easy Kovan, montaj kolaylığı ve pratikliği ile öne çıkmaktadır.
- Özellikle anti-vibrasyon takımlarında blok değiştirmemek amacıyla tasarlanmış bu kovanlar hızlı kurulum özellikleri sayesinde zamandan tasarruf sağlar.

Avantajlar:

- Kolay ve hızlı montaj
- Pratik kullanım ve düşük bakım gereksinimi

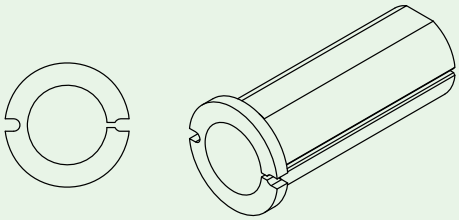

Center Adjustment Adapter

During body assembly, the centring adapter is mounted to the anti-vibration kit.
During the assembly process, the connection threads must be cleaned.
The comparator gauge must be accurate to within a tolerance of 0.01 mm.

Gövde montajı sırasında merkezleme adaptörü anti vibrasyon takımına montaj edilir.
Montaj işlemi sırasında baglantı dişleri temizlenmelidir.
Komparatör Saati 0.01 mm tolerans içerisinde hassasiyet sağlanmalıdır.

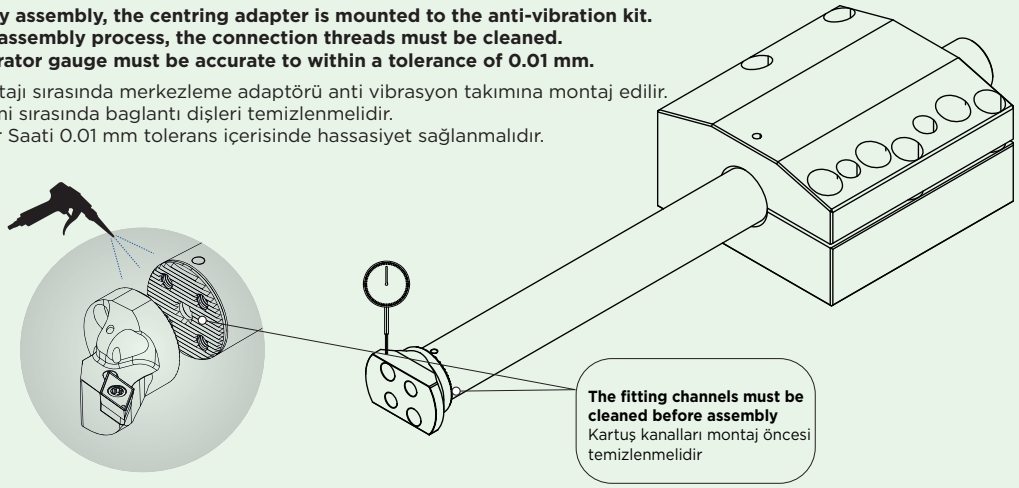

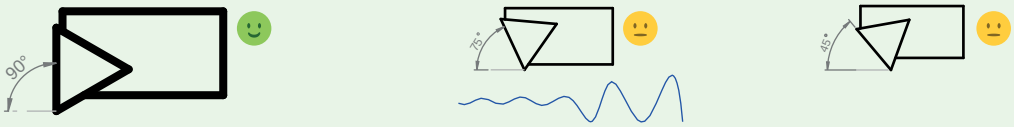

Choose an entry angle that is as close as possible to 90° to reduce the radial forces to a minimum.
Radyal kuvvetleri en aza indirmek için 90°'ye mümkün olduğunca yakın bir giriş açısı seçin.

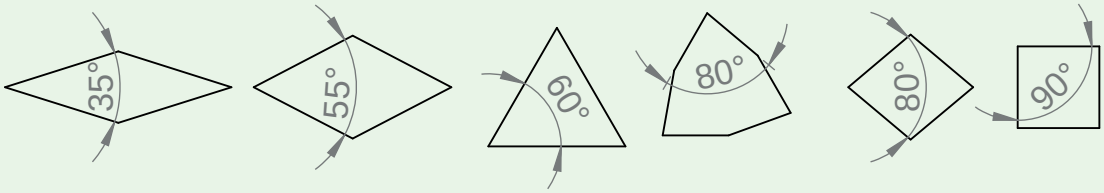

Choose the smallest insert head angle possible. This will be reduce overal cutting force and increace the clearance
Mümkün olan en küçük kesici uç açısını seçin. Bu, genel kesme kuvvetini azaltacak ve boşluğu artıracaktır.

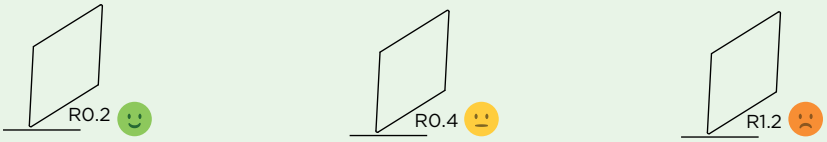

Choose a small nose radius to reduce the cutting forces and to enable machining in a lower depth of cut.
(Depth of cut should be larger than the nose radius)
Kesme kuvvetlerini azaltmak ve daha düşük kesme derinliğinde işlemeyi mümkün kılmak için ince yarıçaplı elmas seçin.
(Kesme derinliği burun yarıçapından daha büyük olmalıdır)

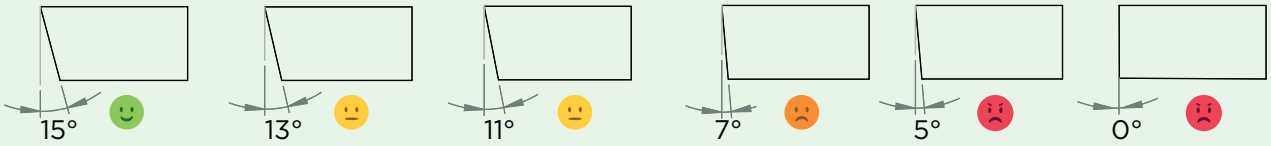

Use an insert with an overall positive geometry to reduce the cutting forces
Kesme kuvvetlerini azaltmak için genel olarak pozitif geometriye sahip bir elmas kullanın

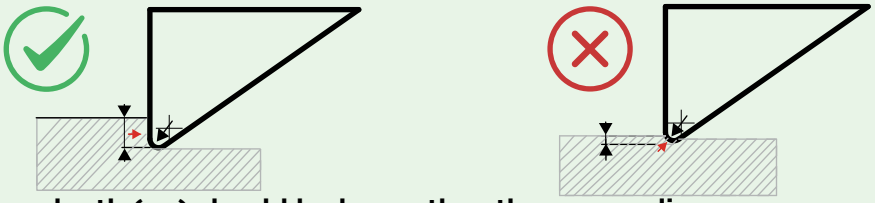

Machining depth (ap) should be larger than the nose redius
İşleme derinliği (ap) radüsten daha büyük olmalıdır böylelikle titreşim sönümlenecektir

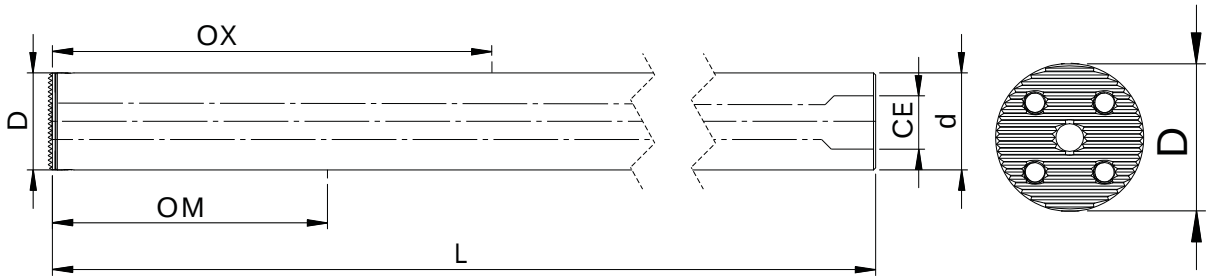

Ordering Code	Item Designation	Dimensions (mm)						
	SAVT	*D*	*d*	*L*	*OM*	*OX*	*CE*	*D Min*
SM78215	SAVT D25 256 7D-H	25	25	256	88	155	G4/1	32
SM78222	SAVT D25 331 10D-H	25	25	331	155	230	G4/1	32
SM78239	SAVT D32 321 7D-H	32	32	321	110	192	G8/3	40
SM78246	SAVT D32 417 10D-H	32	32	417	192	288	G8/3	40
SM78253	SAVT D40 409 7D-H	40	40	409	128	248	G2/1	50
SM78260	SAVT D40 530 10D-H	40	40	530	248	368	G2/1	50

Size Designation	Spare Parts	
	Screw	*Allen Key*
SAVT D25 256 7D-H	BKTV M4x15-9210	SAK-AA3-9902
SAVT D25 331 10D-H		
SAVT D32 321 7D-H	BKTV M5x17-9211	SAK-AA4-9903
SAVT D32 417 10D-H		
SAVT D40 409 7D-H	BKTV M6x21-9214	SAK-AA5-9904
SAVT D40 530 10D-H		

ANTI-VIBRATION BORING BARS

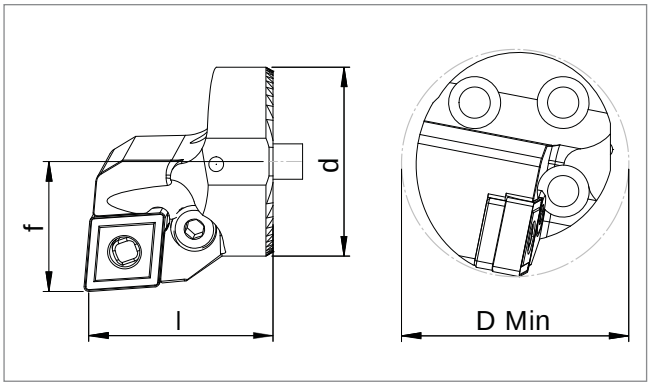

Ordering Code		Item Designation	Dimensions (mm)						Master Insert*
Direction		SAVK A-PCLNR/L (93)		d	l	f	D min	Holder	
Right	Left								
SM78277	SM78291	SAVK A32 PCLNR/L-12	✓	32	32	22	≥40	SAVT D32	CNM.1204..
SM78284	SM78307	SAVK A40 PCLNR/L-12	✓	40	32	27	≥50	SAVT D40 / 50 / 60	

Size Designation	Master Insert*	Spare Parts				
		Lever	Lever Screw	Allen Key	Shim Spring	Shim
SAVK A32	CNM.1204..	SPL1-9120	SLV6 M8x18-9249	SAK-AA3-9902	SLAY1-9701	BAX CN12-9603
SAVK A40						

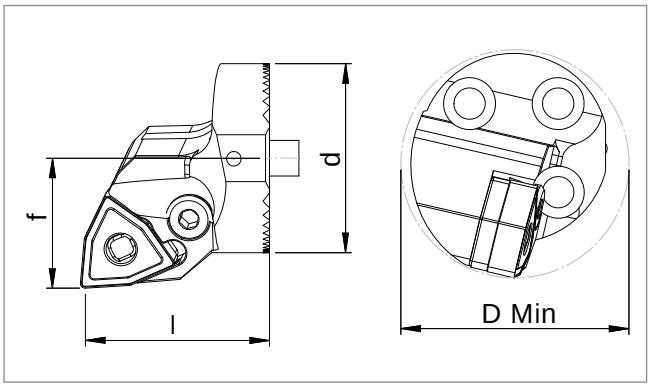

Ordering Code		Item Designation	Dimensions (mm)						Master Insert*
Direction		SAVK A-PWLNR/L (95)		d	l	f	D min	Holder	
Right	Left								
SM78314	SM78338	SAVK A32 PWLNR/L-08	✓	32	32	22	≥40	SAVT D32	WNM.0804..
SM78321	SM78345	SAVK A40 PWLNR/L-08	✓	40	32	27	≥50	SAVT D40 / 50 / 60	

Size Designation	Master Insert*	Spare Parts				
		Lever	Lever Screw	Allen Key	Shim Spring	Shim
SAVK A32	WNM.0804..	SPL1-9120	SLV6 M8x18-9249	SAK-AA3-9902	SLAY1-9701	BAX WN08-9607
SAVK A40						

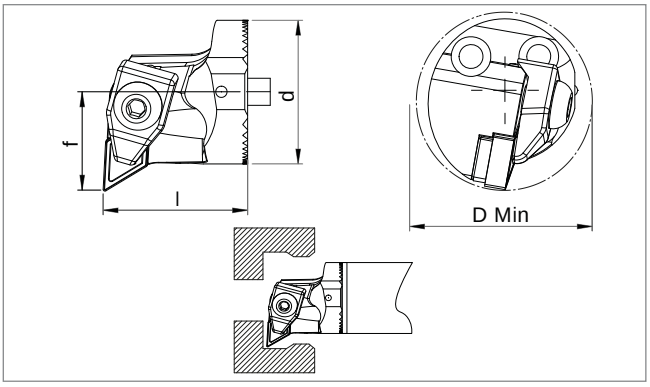

Ordering Code		Item Designation	Dimensions (mm)						Master Insert*
Direction		SAVK A-TDUNR/L (93)		d	l	f	D min	Holder	
Right	Left								
SM78352	SM78376	SAVK A32 TDUNR/L-11	✓	32	32	22	≥40	SAVT D32	DNM.1104..
SM78369	SM78383	SAVK A40 TDUNR/L-15	✓	40	32	27	≥50	SAVT D40 / 50 / 60	DNM.1506..

Size Designation	Master Insert*	Spare Parts					
		Clamp	Screw	Shim	Shim Screw	Stamp	Allen Key
SAVK A32	DNM.1104..	TSK2-9102	TSBV M5x18-9201	BAX DN11-9601	TSAV M4x10x6-9402	-	SAK-AA3-9902
SAVK A40	DNM.1506..	TSK1-9101	TSBV M6x28-9205	BAX DN15-9602	TSAV M4x10-9403	TSP 6.5x12-9705	

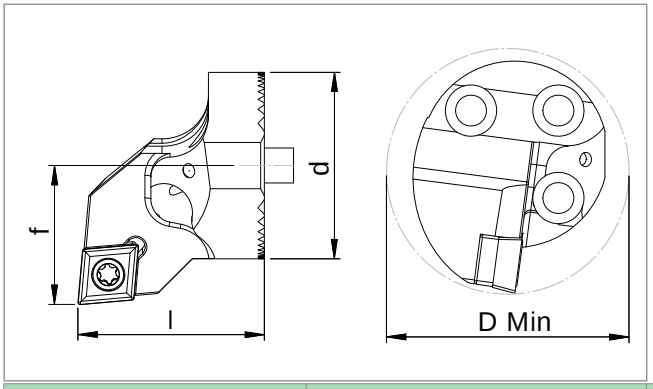

Ordering Code		Item Designation	Dimensions (mm)						Master Insert*
Direction		SAVK A-SCLCR/L (95)		d	l	f	D min	Holder	
Right	Left								
SM78390	SM78420	SAVK A25 SCLCR/L-09	✓	25	25	17	≥32	SAVT D25	CCM. 09T3..
SM78406	SM78437	SAVK A32 SCLCR/L-09	✓	32	32	22	≥40	SAVT D32	
SM78413	SM78444	SAVK A40 SCLCR/L-09	✓	40	32	27	≥50	SAVT D40/D50/D60	

Descriptions	Master Insert*	Spare Parts			
		Screw	Shim	Shim Screw	Torx Key
SAVK A25	CCM. 09T3..	SSV M3.5x10-9511	BAX CC09-9616	SBV5 M5x0.5 A3.5x9-9408	STK-T15-9910
SAVK A32					
SAVK A40		SSV M3.5x12-9526			

ANTI-VIBRATION BORING BARS

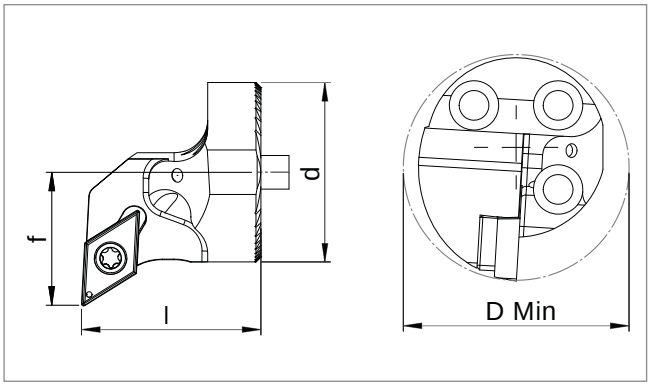

Ordering Code		Item Designation	Dimensions (mm)						Master Insert*
Direction		SAVK A-SDUCR/L (93)		d	l	f	D min	Holder	
Right	Left								
SM78451	SM78482	SAVK A25 SDUCR/L-11	✓	25	25	17	≥32	SAVT D25	DCM. 11T3..
SM78468	SM78499	SAVK A32 SDUCR/L-11	✓	32	32	22	≥40	SAVT D32	
SM78475	SM78505	SAVK A40 SDUCR/L-11	✓	40	32	27	≥50	SAVT D40 / 50 / 60	

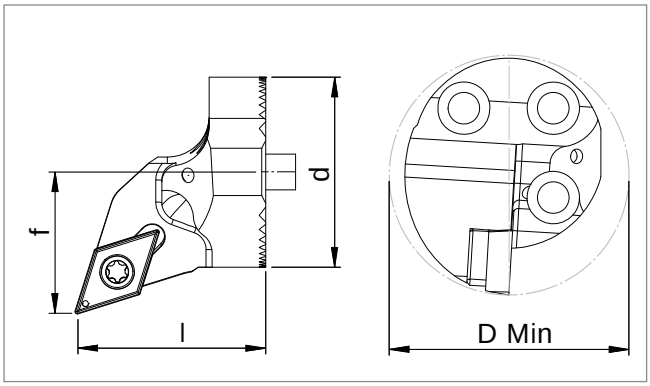

Ordering Code		Item Designation	Dimensions (mm)						Master Insert*
Direction		SAVK A-SDQCR/L (107.5)		d	l	f	D min	Holder	
Right	Left								
SM78512	SM78543	SAVK A25 SDQCR/L-11	✓	25	25	17	≥32	SAVT D25	DCM. 11T3..
SM78529	SM78550	SAVK A32 SDQCR/L-11	✓	32	32	22	≥40	SAVT D32	
SM78536	SM78567	SAVK A40 SDQCR/L-11	✓	40	32	27	≥50	SAVT D40 / 50 / 60	

Descriptions	Master Insert*	Spare Parts			
		Screw	Shim	Shim Screw	Torx Key
SAVK A25	DCM. 11T3..	SSV M3.5x10-9511	BAX DC11-9613	SBV5 M5x0.5 A3.5x9-9408	STK-T15-9910
SAVK A32		SSV M3.5x12-9526			
SAVK A40		SSV M3.5x14-9512		SBV M5x0.5 A3.5x11-9407	

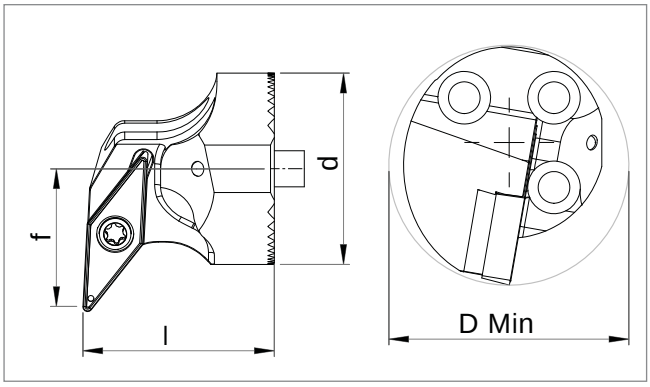

Ordering Code		Item Designation	Dimensions (mm)						Master Insert*
Direction		SAVK A-SVUBR/L (93)		d	l	f	D min	Holder	
Right	Left								
SM78574	SM78604	SAVK A25 SVUBR/L-16	✓	25	25	17	≥32	SAVT D25	VBM. 1604..
SM78581	SM78611	SAVK A32 SVUBR/L-16	✓	32	32	23.5	≥42	SAVT D32	
SM78598	SM78628	SAVK A40 SVUBR/L-16	✓	40	32	27	≥50	SAVT D40 / 50 / 60	

Descriptions	Master Insert*	Spare Parts			
SAVK A25	VBM. 1604..	SSV M3.5x10-9511	BAX VB16-9618	SBV5 M5x0.5 A3.5x9-9408	STK-T15-9910
SAVK A32		SSV M3.5x14-9512		SBV M5x0.5 A3.5x11-9407	
SAVK A40					

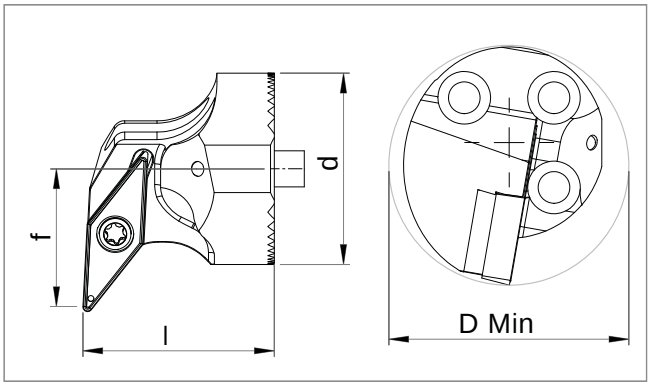

Ordering Code		Item Designation	Dimensions (mm)						Master Insert*
Direction		SAVK A-SVUCR/L (93)		d	l	f	D min	Holder	
Right	Left								
SM78635	SM78666	SAVK A25 SVUCR/L-16	✓	25	25	17	≥32	SAVT D25	VCM. 1604..
SM78642	SM78673	SAVK A32 SVUCR/L-16	✓	32	32	23.5	≥42	SAVT D32	
SM78659	SM78680	SAVK A40 SVUCR/L-16	✓	40	32	27	≥50	SAVT D40 / 50 / 60	

Descriptions	Master Insert*	Spare Parts			
SAVK A25	VCM. 1604..	SSV M3.5x10-9511	BAX VC16-9620	SBV5 M5x0.5 A3.5x9-9408	STK-T15-9910
SAVK A32		SSV M3.5x14-9512		SBV M5x0.5 A3.5x11-9407	
SAVK A40					

ANTI-VIBRATION BORING BARS

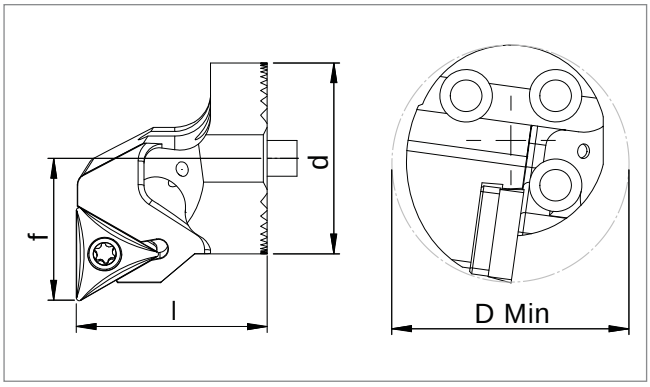

Ordering Code		Item Designation	Dimensions (mm)						Master Insert*
Direction		*SAVK A-STFCR/L (90)*		*d*	*l*	*f*	*D min*	*Holder*	
Right	*Left*								
SM78697	SM78727	SAVK A25 STFCR/L-16	✓	25	25	17	≥32	SAVT D25	TCM.16T3..
SM78703	SM78734	SAVK A32 STFCR/L-16	✓	32	32	22	≥40	SAVT D32	
SM78710	SM78741	SAVK A40 STFCR/L-16	✓	40	32	27	≥50	SAVT D40 / 50 / 60	

Descriptions	Master Insert*	Spare Parts			
		Screw	*Shim*	*Shim Screw*	*Torx Key*
SAVK A25	TCM.16T3..	SSV M3.5x12-9526	BAX TC16-9619	SBV5 M5x0.5 A3.5x9-9408	STK-T15-9910
SAVK A32					
SAVK A40		SSV M3.5x14-9512		SBV M5x0.5 A3.5x11-9407	

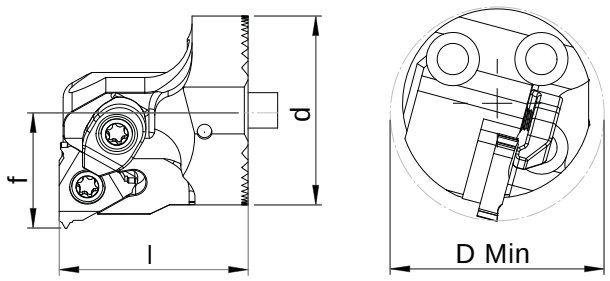

Ordering Code		Item Designation	Dimensions (mm)						Master Insert*
Direction									
Right	Left	SAVK A-SIR/L		d	l	f	D min	Holder	
SM78758	SM78789	SAVK A25 SIR/L-16	✓	25	25	17	≥32	SAVT D25	16 IR/IL-ISO (0.35-3)
SM78765	SM78796	SAVK A32 SIR/L-16	✓	32	32	22	≥40	SAVT D32	
SM78772	SM78802	SAVK A40 SIR/L-16	✓	40	32	27	≥50	SAVT D40 / 50 / 60	

Descriptions	Master Insert*	Spare Parts						
		Screw	Shim	Shim Screw	Torx Key	Clamp	Clamp Screw	Torx Key
SAVK A25	16 IR/IL-ISO (0.35-3)	SSV M3.5x10 9511	BAX ER/L-16-9623	SBV5 M5.05-A3.5x9-9408	STK-T15 9910	PSK2 9126	SSV M3.5x11 9532	STK-T15 9910
SAVK A32		SSV M3.5x12 9526						
SAVK A40		SSV M3.5x14 9512		SBV5 M5.05-A3.5x11-9407				

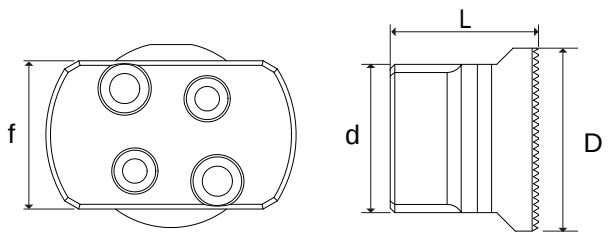

Ordering Code	Item Designation	Dimensions (mm)			
	SAVK-SA	D	d	L	H
SM80546	SAVK SA25	32	25	25	20
SM80553	SAVK SA32-40	51	40	32	32

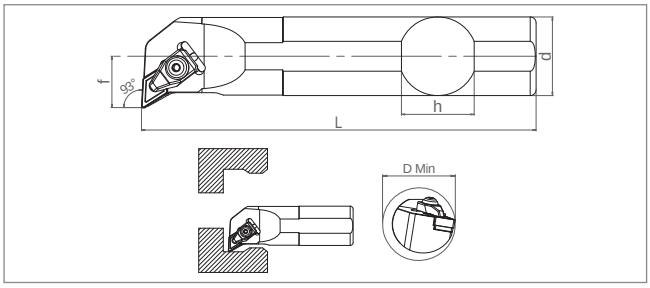

Ordering Code		Item Designation	Dimensions (mm)						Master Insert*
Direction		TDUNR/L (93)		d	h	L	f	D min	
Right	Left								
SM04887	SM04924	S25S TDUNR/L-11	-	25	23	250	18	≥33	DNM.1104..
SM04917	SM04955	S32T TDUNR/L-11	-	32	30	300	22	≥40	
SM72824	**SM72831**	**A25R TDUNR/L-15**	✓	**25**	**23**	**200**	**18**	**≥36**	DNM.1506..
SM72848	**SM72855**	**A32S TDUNR/L-15**	✓	**32**	**30**	**250**	**22**	**≥40**	
SM05044	SM04986	S25S TDUNR/L-15	-	25	23	250	18	≥36	
SM05075	SM04993	S32T TDUNR/L-15	-	32	30	300	22	≥40	
SM05099	SM05013	S40U TDUNR/L-15	-	40	37	350	29.5	≥50	
SM05112	SM05174	S50V TDUNR/L-15	-	50	47	400	34	≥63	

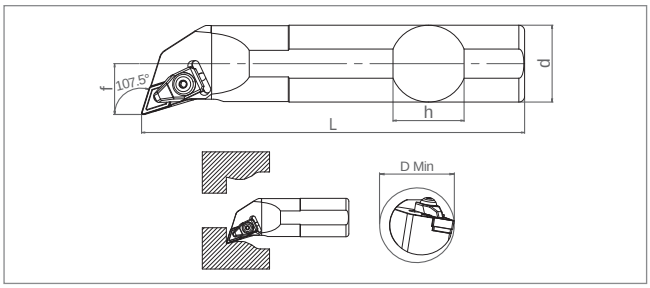

Ordering Code		Item Designation	Dimensions (mm)						Master Insert*
Direction		TDQNR/L (107.5)		d	h	L	f	D min	
Right	Left								
SM04894	SM04931	S25S TDQNR/L-11	-	25	23	250	18	≥36	DNM.1104..
SM04962	SM04979	S32T TDQNR/L-11	-	32	30	300	22	≥40	
SM72862	**SM72879**	**A25R TDQNR/L-15**	✓	**25**	**23**	**200**	**18**	**≥36**	DNM.1506..
SM72886	**SM72893**	**A32S TDQNR/L-15**	✓	**32**	**30**	**250**	**22**	**≥40**	
SM05051	SM05136	S25S TDQNR/L-15	-	25	23	250	18	≥36	
SM05082	SM05006	S32T TDQNR/L-15	-	32	30	300	22	≥40	
SM05105	SM05150	S40U TDQNR/L-15	-	40	37	350	29.5	≥50	
SM05020	SM05181	S50V TDQNR/L-15	-	50	47	400	34	≥63	

Size Designation	Master Insert*	Spare Parts					
		Clamp	Screw	Shim	Shim Screw	Stamp	Allen Key
S25..	DNM.1104..	TSK2-9102	TSBV M5x18-9201	BAX DN11-9601	TSAV M4x10x6-9402	-	SAK-AA3-9902
S32..			TSBV M5x23-9202				
S25.. - S50..	DNM.1506..	TSK1-9101	TSBV M6x28-9205	BAX DN15-9602	TSAV M4x10-9403	TSP 6.5x12-9705	

*Suitable Insert is ISO
***Spare Parts Ordering Codes*

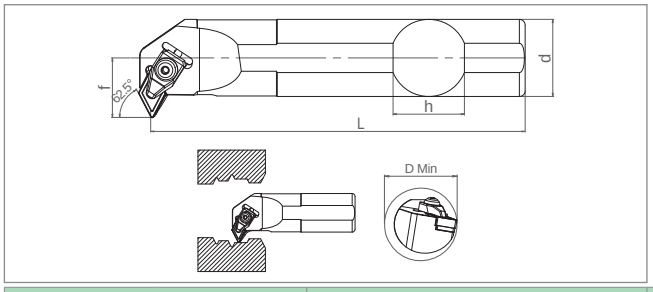

Ordering Code		Item Designation	Dimensions (mm)					Master Insert*
Direction		TD-NR/L (62.5)	d	h	L	f	D min	
Right	Left							
SM04900	SM04948	S25S TD-NR/L-11	25	23	250	18	≥36	DNM.1104..
SM05068	SM05143	S32T TD-NR/L-15	32	30	300	22	≥42	DNM.1506..
SM05129	SM05167	S40U TD-NR/L-15	40	37	350	29.5	≥50	
SM05037	SM05198	S50V TD-NR/L-15	50	47	400	34	≥63	

Size Designation	Master Insert*	Spare Parts					
		Clamp	Screw	Shim	Shim Screw	Stamp	Allen Key
S25..	DNM.1104..	TSK2-9102	TSBV M5x18-9201	BAX DN11-9601	TSAV M4x10x6-9402	-	SAK-AA3-9902
S32.. - S32							
S25.. - S50..	DNM.1506..	TSK1-9101	TSBV M6x28-9205	BAX DN15-9602	TSAV M4x10-9403	TSP 6.5x12-9705	

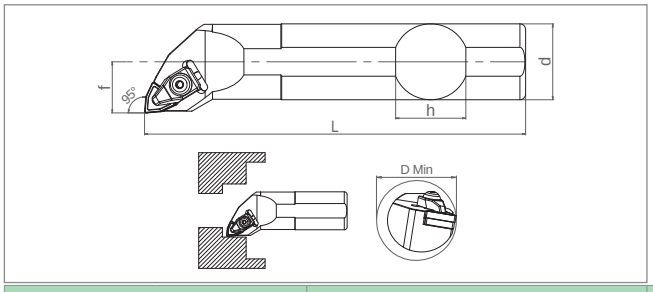

Ordering Code		Item Designation	Dimensions (mm)						Master Insert*
Direction		TWLNR/L (95)		d	h	L	f	D min	
Right	Left								
SM50471	SM50488	S20R TWLNR/L-06	-	20	18	200	15	≥26	WNM.0604..
SM05488	SM05495	S25S TWLNR/L-06	-	25	23	250	18	≥36	
SM05518	SM05501	S32T TWLNR/L-06	-	32	30	300	22	≥40	
SM72909	**SM72916**	**A25R TWLNR/L-08**	✓	**25**	**23**	**200**	**18**	**≥36**	WNM.0804..
SM73869	**SM73876**	**A32S TWLNR/L-08**	✓	**32**	**30**	**250**	**22**	**≥40**	
SM05532	SM05570	S25S TWLNR/L-08	-	25	23	250	18	≥36	
SM05549	SM05525	S32T TWLNR/L-08	-	32	30	300	22	≥40	
SM05556	SM05587	S40U TWLNR/L-08	-	40	37	350	29.5	≥50	
SM05563	SM05594	S50V TWLNR/L-08	-	50	47	400	34	≥63	

Size Designation	Master Insert*	Spare Parts					
		Clamp	Screw	Shim	Shim Screw	Stamp	Allen Key
S20..	WNM.0604..	TSK7-9125	TSBV M5x18-9201	-	-	-	SAK-AA3-9902
S25.. - S32..		TSK2-9102	TSBV M5x23-9202	BAX WN06-9606	CSAV M3x10-9401		
S25.. - S50..	WNM.0804..	TSK1-9101	TSBV M6x28-9205	BAX WN08-9607	TSAV M4x10-9403	TSP 6.5x12-9705	

*Suitable Insert is ISO

**Spare Parts Ordering Codes*

INTERNAL TURNING TOOLS

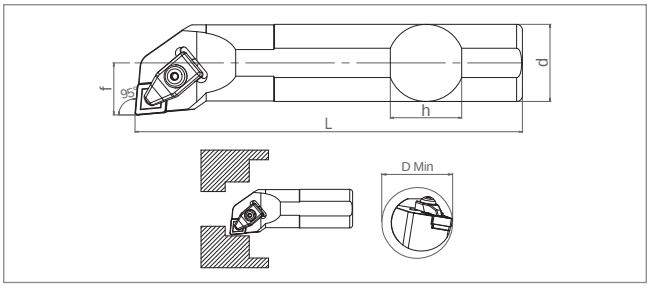

Ordering Code		Item Designation	Dimensions (mm)						Master Insert*
Direction		TCLNR/L (95)		d	h	L	f	D min	
Right	Left								
SM38721	SM38714	S20R TCLNR/L-12	-	20	18	200	15	≥26	CNM.1204..
SM72923	**SM72930**	**A25R TCLNR/L-12**	✓	**25**	**23**	**200**	**18**	**≥36**	
SM72947	**SM72954**	**A32S TCLNR/L-12**	✓	**32**	**30**	**250**	**22**	**≥40**	
SM04764	SM04740	S25S TCLNR/L-12	-	25	23	250	18	≥36	
SM04832	SM04757	S32T TCLNR/L-12	-	32	30	300	22	≥40	
SM04788	SM04795	S40U TCLNR/L-12	-	40	37	350	29.5	≥50	
SM04771	SM04801	S50V TCLNR/L-12	-	50	47	400	34	≥63	
SM04818	SM04825	S32T TCLNR/L-16	-	32	30	300	22	≥42	CNM.1606..
SM04849	SM04863	S40U TCLNR/L-16	-	40	37	350	29.5	≥50	
SM04856	SM04870	S50V TCLNR/L-16	-	50	47	400	34	≥63	
SM49314	SM49321	S40U TCLNR/L-19	-	40	37	350	29.5	≥50	CNM..1909..
SM38875	SM38868	S50V TCLNR/L-19	-	50	47	400	34	≥63	

Size Designation	Master Insert*	Spare Parts					
		Clamp	Screw	Shim	Shim Screw	Stamp	Allen Key
S20..	CNM.1204..	TSK6-9106	TSBV M5x18-9201	-	-	-	SAK-AA3-9902
S25.. - S50..		TSK1-9101	TSBV M6x28-9205	BAX CN12-9603	TSAV M4x10-9403	TSP 6.5x12-9705	
S32.. - S50..	CNM.1606..	TSK3-9103	TSBV M6x28x7-9206	BAX CN16-9604	TSAV M6x14x9-9404	-	
S40.. - S50	CNM.1906..	TSK4-9104	TSBV M8X30-9207	BAX CN19-9605	TSAV M6x16x11-9406		SAK-AA4-9903

*Suitable Insert is ISO
***Spare Parts Ordering Codes*

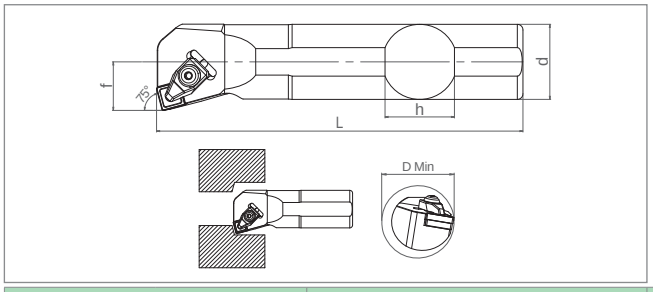

Ordering Code		Item Designation	Dimensions (mm)					Master Insert*
Direction		TSKNR/L (75)	d	h	L	f	D min	
Right	Left							
SM05204	SM05235	S25S TSKNR/L-12	25	23	250	18	≥34	SNM.1204..
SM05211	SM05242	S32T TSKNR/L-12	32	30	300	22	≥40	
SM05228	SM05259	S40U TSKNR/L-12	40	37	350	29.5	≥50	
SM05266	SM05273	S50V TSKNR/L-12	50	47	400	34	≥63	
SM37601	SM37618	S32T TSKNR/L-15	32	30	300	22	≥44	SNM.1506
SM37625	SM37632	S40U TSKNR/L-15	40	37	350	29.5	≥50	
SM37649	SM37656	S50V TSKNR/L-15	50	47	400	34	≥63	

Size Designation	Master Insert*	Spare Parts					
S25.. - S50..	SNM.1204..	TSK1-9101	TSBV M6x28-9205	BAX SN12-9608	TSAV M4x10-9403	TSP 6.5x12-9705	SAK-AA3-9902
S32..	SNM.1506..	TSK3-9103	TSBV M6x28x7-9206	BAX SN15-9609	TSAV M6x10x9-9416	-	
S40.. - S50..					TSAV M6x14x9-9404		

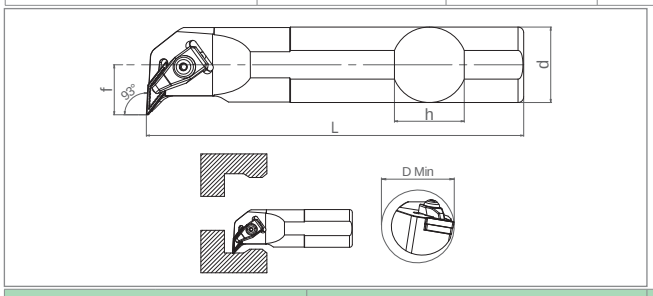

Ordering Code		Item Designation	Dimensions (mm)						Master Insert*
Direction		TVUNR/L (93)		d	h	L	f	D min	
Right	Left								
SM72961	SM72978	A25R TVUNR/L-16	✓	25	23	200	19	≥34	VNM.1604..
SM72985	SM72992	A32S TVUNR/L-16	✓	32	30	250	22	≥43	
SM05426	SM05433	S25S TVUNR/L-16	-	25	23	250	19	≥34	
SM05440	SM05457	S32T TVUNR/L-16	-	32	30	300	22	≥43	
SM05464	SM05471	S40U TVUNR/L-16	-	40	37	350	29.5	≥50	
SM49338	SM49345	S50V TVUNR/L-16	-	50	47	400	34	≥63	

Size Designation	Master Insert*	Spare Parts					
S25..	VNM.1604..	TSK2-9102	TSBV M5x23-9202	BAX VN16-9612	TSAV M4x10x6 9402	-	SAK-AA3-9902
S32.. - S50		TSK5-9105	TSBV M6x28-9205			TSP 6.5x12-9705	

*Suitable Insert is ISO

**Spare Parts Ordering Codes*

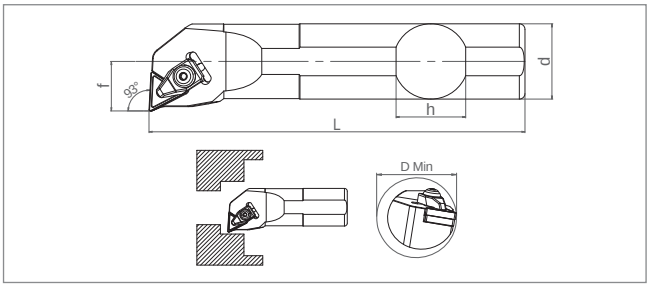

Ordering Code		Item Designation	Dimensions (mm)					Master Insert*
Direction		*TTUNR/L (93)*	*d*	*h*	*L*	*f*	*D min*	
Right	*Left*							
SM05280	SM05297	S25S TTUNR/L-16	25	23	250	18	≥34	TNM.1604..
SM05327	SM05334	S32T TTUNR/L-16	32	30	300	22	≥40	
SM05365	SM05372	S32T TTUNR/L-22	32	30	300	22	≥40	TNM.2204..
SM05389	SM05396	S40U TTUNR/L-22	40	37	350	29.5	≥50	
SM05402	SM05419	S50V TTUNR/L-22	50	47	400	34	≥63	

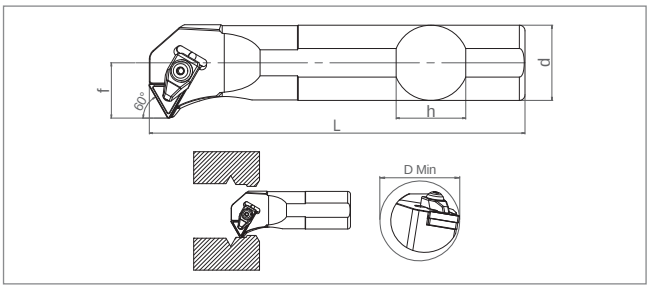

Ordering Code		Item Designation	Dimensions (mm)					Master Insert*
Direction		*TT-NR/L (60)*	*d*	*h*	*L*	*f*	*D min*	
Right	*Left*							
SM05303	SM05310	S25S TT-NR/L-16	25	23	250	18	≥34	TNM.1604..
SM05341	SM05358	S32T TT-NR/L-16	32	30	300	22	≥40	

Descriptions	Master Insert*	Spare Parts					
S25..	TNM.1604..	TSK2-9102	TSBV M5x23-9202	BAX TN16-9610	TSAV M4x10x7-9402	-	SAK-AA3-9902
S32..			TSBV M5x23-9202				
S32.. - S50..	TNM.2204..	TSK1-9101	TSBV M6x28-9205	BAX TN22-9611	TSAV M4x10-9403	TSP 6.5x12-9705	

*Suitable Insert is ISO

*Suitable Insert is ISO
**Spare Parts Ordering Codes*

SMOXH
A32S PSKNR-12
SMOXH
A32S PDQNR-15

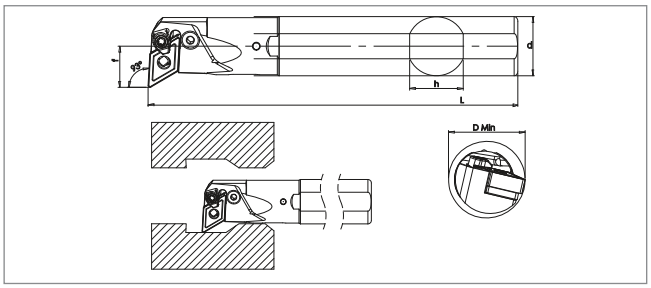

Ordering Code		Item Designation	Dimensions (mm)						Master Insert*
Direction		A-PDUNR/L (93)		d	h	L	f	D min	
Right	Left								
SM73326	**SM73333**	**A25R PDUNR/L-15**	✓	**25**	**23**	**200**	**17**	≥32	DNM.1506..
SM40328	SM40335	A32S PDUNR/L-15	✓	32	30	250	22	≥40	

Size Designation	Master Insert*	Spare Parts							
		Lever	Lever Screw	Allen Key	Shim Spring	Shim	Clamp	Clamp Screw	Torx Key
A25..	DNM.1506..	SPL4 9123	SLV5 M8x19 9231	SAK-AA3-9902	SLAY1 9701	BAX DN15-9602	PSK4 9128	SSV M3.5x11 9532	STK-T15 9910
S32..			SLV4 M8x21 9229				PSK2 9126		

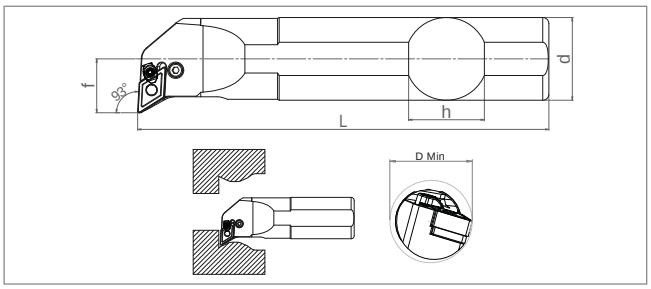

Ordering Code		Item Designation	Dimensions (mm)					Master Insert*
Direction		PDUNR/L (93)	d	h	L	f	D min	
Right	Left							
SM73340	**SM73357**	**S25S PDUNR/L-15**	**25**	**23**	**250**	**17**	≥32	DNM.1506..
SM06072	SM06089	S32T PDUNR/L-15	32	30	300	22	≥40	
SM06119	SM06126	S40U PDUNR/L-15	40	37	350	27	≥50	
SM37663	SM37670	S50V PDUNR/L-15	50	47	400	34	≥63	

Size Designation	Master Insert*	Spare Parts							
		Lever	Lever Screw	Allen Key	Shim Spring	Shim	Clamp	Clamp Screw	Torx Key
S25..	DNM.1506..	SPL4 9123	SLV5 M8x19 9231	SAK-AA3-9902	SLAY1 9701	BAX DN15-9602	PSK4 9128	SSV M3.5x11 9532	STK-T15 9910
S32.. - S50..			SLV4 M8x21 9229				PSK2 9126		

*Suitable Insert is ISO
**Spare Parts Ordering Codes

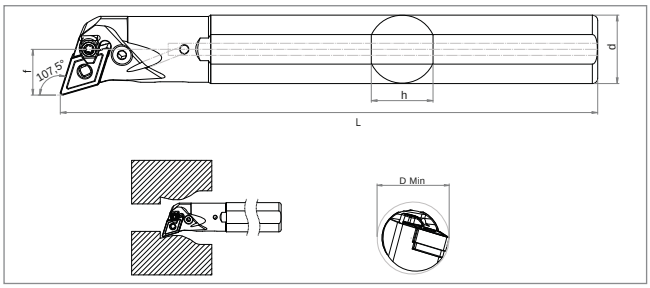

Ordering Code		Item Designation	Dimensions (mm)						Master Insert*
Direction		PDQNR/L (107.5)		d	h	L	f	D min	
Right	Left								
SM40366	SM40373	A25R PDQNR/L-15	✓	25	23	200	17	≥32	DNM.1506..
SM40359	SM40342	A32S PDQNR/L-15	✓	32	30	250	22	≥40	

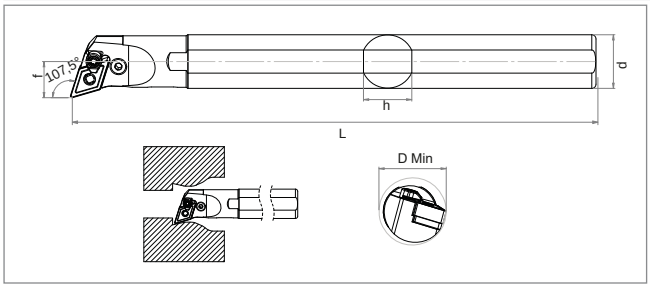

Ordering Code		Item Designation	Dimensions (mm)					Master Insert*
Direction		PDQNR/L (107.5)	d	h	L	f	D min	
Right	Left							
SM06065	SM27770	S25S PDQNR/L-15	25	23	250	17	≥32	DNM.1506..
SM06102	SM06096	S32T PDQNR/L-15	32	30	300	22	≥40	
SM06133	SM06140	S40U PDQNR/L-15	40	37	350	27	≥50	
SM37687	SM38660	S50V PDQNR/L-15	50	47	400	34	≥63	

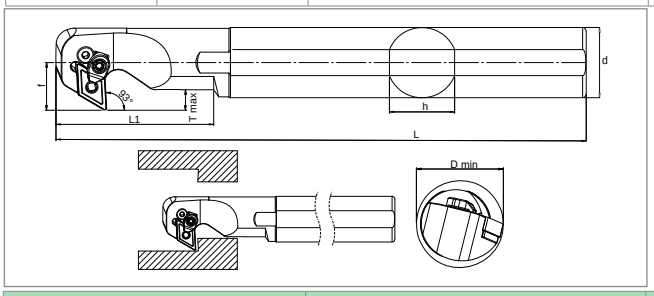

Ordering Code		Item Designation	Dimensions (mm)							Master Insert*
Direction		PDXNR/L(93)	d	h	L	f	l	T max	D min	
Right	Left									
SM73166	**SM73173**	**S32T PDXNR/L-15**	**32**	**30**	**300**	**22**	**70**	**9**	**≥40**	**DNM.1506..**

Size Designation	Master Insert*	Spare Parts							
		Lever	Lever Screw	Allen Key	Shim Spring	Shim	Clamp	Clamp Screw	Torx Key
S25..	DNM.1506..	SPL4 9123	SLV5 M8x19-9231	SAK-AA3-9902	SLAY1 9701	BAX DN15-9602	PSK4 9128	SSV M3.5x11 9532	STK-T15 9910
S32.. - S50..			SLV4 M8x21-9229				PSK2 9126		

*Suitable Insert is ISO

**Spare Parts Ordering Codes*

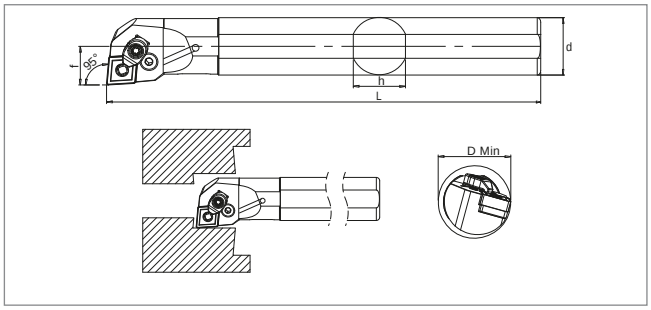

Ordering Code		Item Designation	Dimensions (mm)						Master Insert*
Direction		A-PCLNR/L (95)		d	h	L	f	D min	
Right	Left								
SM40403	SM40410	A25R PCLNR/L-12	✓	25	23	200	17	≥32	CNM.1204..
SM40304	SM40311	A32S PCLNR/L-12	✓	32	30	250	22	≥40	
SM49352	SM49369	A32S PCLNR/L-16	✓	32	30	250	22	≥40	CNM.1606..

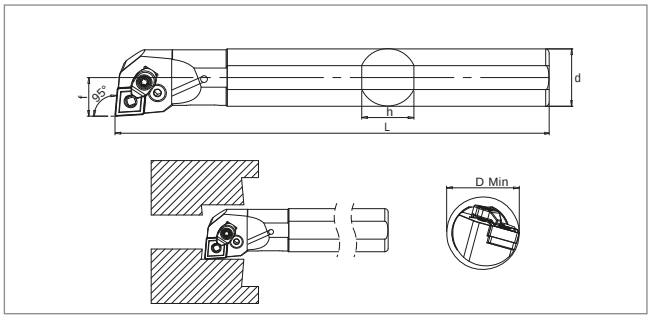

Ordering Code		Item Designation	Dimensions (mm)					Master Insert*
Direction		PCLNR/L (95)	d	h	L	f	D min	
Right	Left							
SM05938	SM05945	S25S PCLNR/L-12	25	23	250	17	≥32	CNM.1204..
SM05952	SM05969	S32T PCLNR/L-12	32	30	300	22	≥40	
SM05976	SM05983	S40U PCLNR/L-12	40	37	350	27	≥50	
SM63600	**SM63617**	**S50V PCLNR/L-12**	**50**	**47**	**400**	**34**	**≥63**	
SM05990	SM06003	S32T PCLNR/L-16	32	30	300	22	≥40	CNM.1606..
SM06010	SM06027	S40U PCLNR/L-16	40	37	350	27	≥50	
SM37694	SM37700	S50V PCLNR/L-16	50	47	400	34	≥63	
SM37717	SM37724	S40U PCLNR/L-19	40	37	350	27	≥50	CNM.1906..
SM37731	SM37748	S50V PCLNR/L-19	50	47	400	34	≥63	

Size Designation	Master Insert*	Spare Parts							
		Lever	Lever Screw	Allen Key	Shim Spring	Shim	Clamp	Clamp Screw	Torx Key
S25.. - S32..	CNM.1204..	SPL1-9120	SLV6 M8x18-9249	SAK-AA3-9902	SLAY1-9701	BAX CN12-9603	PSK2 9126	SSV M3.5x11 9532	STK-T15 9910
S40.. - S50..									
S32.. - S50..	CNM.1606..	SPL2-9121	SLV2 M8x24-9225		SLAY2-9702	BAX CN16-9604			
S40.. - S50..	CNM.1906..	SPL3-9122	SLV3 M10x29-9226	SAK-AA4-9903	SLAY3-9703	BAX CN19-9605	PSK3 9127	SSV M6x16 9520	STK-T20 9911

*Suitable Insert is ISO
**Spare Parts Ordering Codes

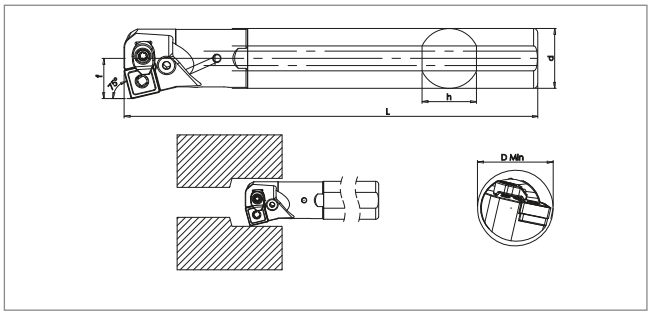

Ordering Code		Item Designation	Dimensions (mm)						Master Insert*
Direction		PSKNR/L (75)		d	h	L	f	D min	
Right	Left								
SM49376	SM49383	A25R PSKNR/L-12	✓	25	23	200	17	≥32	SNM.1204..
SM49390	SM49406	A32S PSKNR/L-12	✓	32	30	250	22	≥40	
SM49413	SM49420	A32S PSKNR/L-15	✓	32	30	250	22	≥40	SNM.1506..

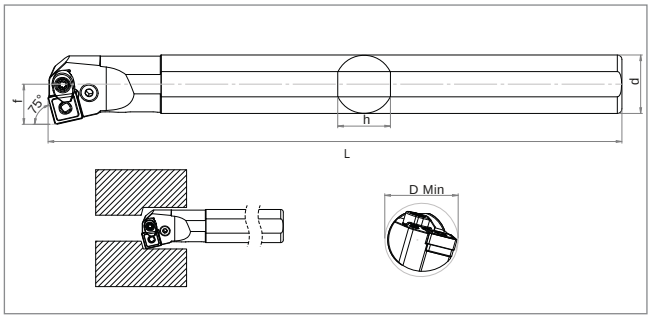

Ordering Code		Item Designation	Dimensions (mm)					Master Insert*
Direction		PSKNR/L (75)	d	h	L	f	D min	
Right	Left							
SM06157	SM06164	S25S PSKNR/L-12	25	23	250	17	≥32	SNM.1204..
SM06171	SM06188	S32T PSKNR/L-12	32	30	300	22	≥40	
SM06195	SM06201	S40U PSKNR/L-12	40	37	350	27	≥50	
SM06218	SM06225	S32T PSKNR/L-15	32	30	300	22	≥40	SNM.1506..
SM06232	SM06249	S40U PSKNR/L-15	40	37	350	27	≥50	
SM37779	SM37786	S50V PSKNR/L-15	50	47	400	34	≥63	

Size Designation	Master Insert*	Spare Parts							
		Lever	Lever Screw	Allen Key	Shim Spring	Shim	Clamp	Clamp Screw	Torx Key
S25.. - S32..	SNM.1204..	SPL1-9120	SLV6 M8x18-9249	SAK-AA3-9902	SLAY1-9701	BAX SN12-9608	PSK2 9126	SSV M3.5x11 9532	STK-T15 9910
S40..			SLV1 M8x20-9224						
S32.. - S50..	SNM.1506..	SPL2-9121	SLV2 M8x24-9225		SLAY2-9702	BAX SN15-9609			

*Suitable Insert is ISO

**Spare Parts Ordering Codes*

INTERNAL TURNING TOOLS

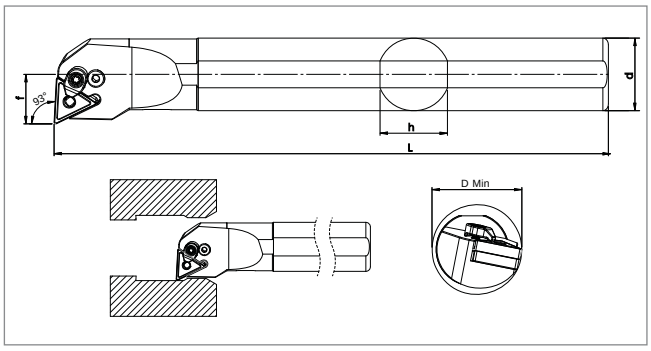

Ordering Code		Item Designation	Dimensions (mm)					Master Insert*
Direction		*PTUNR/L (93)*	*d*	*h*	*L*	*f*	*D min*	
Right	*Left*							
SM73289	**SM73302**	**S32T PTUNR/L-22**	**32**	**30**	**300**	**22**	**≥40**	TNM.2204..
SM73296	**SM73319**	**S40U PTUNR/L-22**	**40**	**37**	**350**	**27**	**≥50**	

Size Designation	Master Insert*	Spare Parts							
		Lever	*Lever Screw*	*Allen Key*	*Shim Spring*	*Shim*	*Clamp*	*Clamp Screw*	*Torx Key*
S32.. - S40..	TNM.2204..	SPL4-9123	SLV5 M8x19 9231	SAK-AA3-9902	SLAY1 9701	BAX TN22-9611	PSK2 9126	SSV M3.5x11 9532	STK-T15 9910

*Suitable Insert is ISO
***Spare Parts Ordering Codes*

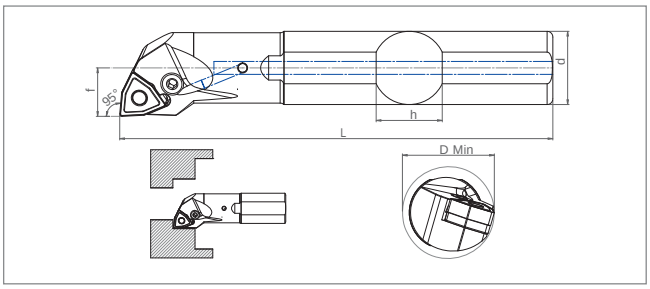

Ordering Code		Item Designation	Dimensions (mm)						Master Insert*
Direction		A-PWLNR/L (95)		d	h	L	f	D min	
Right	Left								
SM40250	SM40267	A25R PWLNR/L-08	✓	25	23	200	17	≥32	WNM.0804..
SM40236	SM40243	A32S PWLNR/L-08	✓	32	30	250	22	≥40	

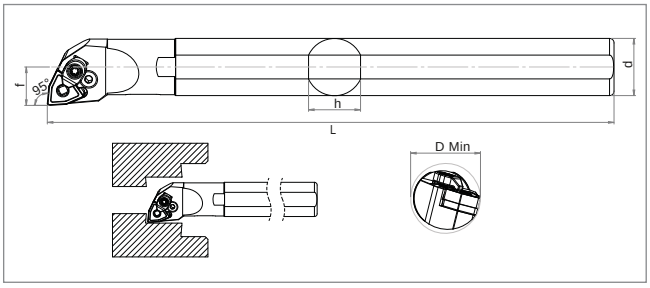

Ordering Code		Item Designation	Dimensions (mm)					Master Insert*
Direction		PWLNR/L (95)	d	h	L	f	D min	
Right	Left							
SM06256	SM06263	S25S PWLNR/L-08	25	23	250	17	≥32	WNM.0804..
SM06270	SM06287	S32T PWLNR/L-08	32	30	300	22	≥40	
SM06294	SM06300	S40U PWLNR/L-08	40	37	350	27	≥50	
SM37755	SM37762	S50V PWLNR/L-08	50	47	400	344	≥63	

Size Designation	Master Insert*	Spare Parts							
		Lever	Lever Screw	Allen Key	Shim Spring	Shim	Clamp	Clamp Screw	Torx Key
S25.. - S50..	WNM.0804..	SPL1-9120	SLV6 M8x18-9249	SAK-AA3-9902	SLAY1-9701	BAX WN08-9607	PSK2 9126	SSV M3.5x11 9532	STK-T15 9910

*Suitable Insert is ISO
**Spare Parts Ordering Codes

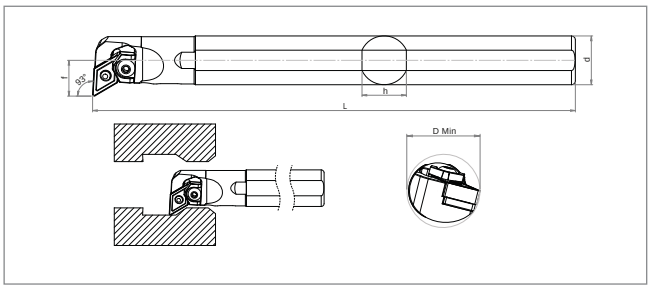

Ordering Code		Item Designation	Dimensions (mm)					Master Insert*
Direction		*MDUNR/L (93)*	*d*	*h*	*L*	*f*	*D min*	
Right	*Left*							
SM73081	**SM73098**	**S25S MDUNR/L-15**	**25**	**23**	**250**	**18**	≥32	DNM.1506..
SM73104	**SM73111**	**S32T MDUNR/L-15**	**32**	**30**	**300**	**22**	≥40	

Descriptions	Master Insert*	Spare Parts					
S25.. - S32..	DNM.1506..	MSK2-9108	TSBV M5x18-9201	BAX DN15-9602	BMP6 5x6x14-9316	-	SAK-AA3-9902

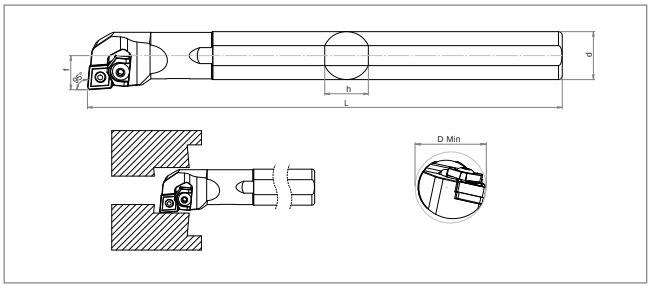

Ordering Code		Item Designation	Dimensions (mm)					Master Insert*
Direction		*MCLNR/L (95)*	*d*	*h*	*L*	*f*	*D min*	
Right	*Left*							
SM73128	**SM73135**	**S25S MCLNR/L-12**	**25**	**23**	**250**	**18**	≥32	CNM.1204..
SM73142	**SM73159**	**S32T MCLNR/L-12**	**32**	**30**	**300**	**22**	≥40	

Descriptions	Master Insert*	Spare Parts					
S25.. - S32..	CNM.1204..	MSK5-9132	TSBV M5x18-9201	BAX CN12-9603	BMP6 5x6x14-9316	-	SAK-AA3-9902

*Suitable Insert is ISO
***Spare Parts Ordering Codes*

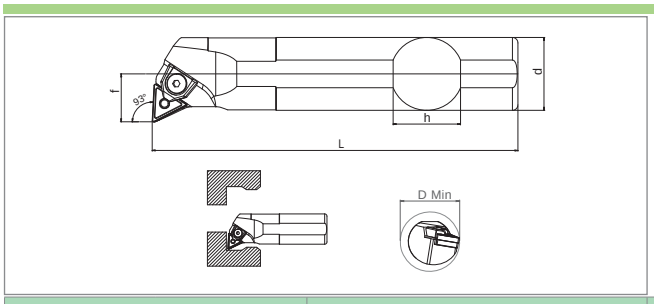

Ordering Code		Item Designation	Dimensions (mm)						Master Insert*
Direction		MTUNR/L (93)		d	h	L	f	D min	
Right	Left								
SM22072	SM23529	S20R MTUNR/L-16	-	20	18	200	15	≥26	TNM.1604..
SM73005	**SM73012**	**A25R MTUNR/L-16**	✓	**25**	**23**	**200**	**18**	**≥32**	
SM73029	**SM73036**	**A32S MTUNR/L-16**	✓	**32**	**30**	**250**	**22**	**≥40**	
SM23536	SM23567	S25S MTUNR/L-16	-	25	23	250	18	≥32	
SM20870	SM20887	S32T MTUNR/L-16	-	32	30	300	22	≥40	
SM20979	SM20986	S40U MTUNR/L-16	-	40	37	350	29.5	≥50	
SM79076	**SM79083**	**S50V MTUNR/L-16**	**-**	**50**	**47**	**400**	**38**	**≥63**	
SM73067	**SM73074**	**A32S MTUNR/L-22**	✓	**32**	**30**	**250**	**22**	**≥40**	TNM.2204..
SM05648	SM05716	S32T MTUNR/L-22	-	32	30	300	22	≥40	
SM05679	SM05624	S40U MTUNR/L-22	-	40	37	350	29.5	≥50	
SM05709	SM05754	S50V MTUNR/L-22	-	50	47	400	34	≥63	

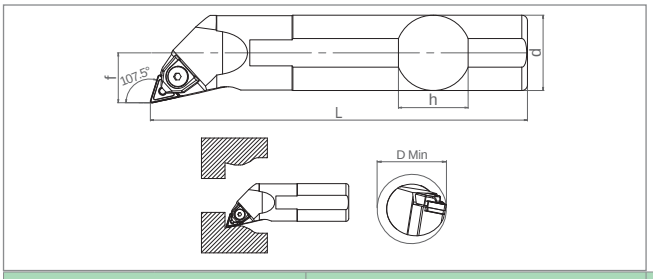

Ordering Code		Item Designation	Dimensions (mm)					Master Insert*
Direction		MTQNR/L (107.5)	d	h	L	f	D min	
Right	Left							
SM22188	SM22195	S20R MTQNR/L-16	20	18	200	15	≥26	TNM.1604..
SM23543	SM23550	S25S MTQNR/L-16	25	23	250	18	≥32	
SM20665	SM20894	S32T MTQNR/L-16	32	30	300	22	≥40	
SM22362	SM22355	S40U MTQNR/L-16	40	37	350	29.5	≥50	
SM79090	**SM79106**	**S50V MTQNR/L-16**	**50**	**47**	**400**	**38**	**≥63**	
SM05655	SM05723	S32T MTQNR/L-22	32	30	300	22	≥40	TNM.2204..
SM05686	SM05730	S40U MTQNR/L-22	40	37	350	29.5	≥50	
SM05631	SM05761	S50V MTQNR/L-22	50	47	400	34	≥63	

Descriptions	Master Insert*	Spare Parts				
S20..	TNM.1604..	MSK2-9108	TSBV M5x18-9201	-	BMP4 3.70x5x12 9322	SAK-AA3-9902
S25..		MSK1-9107	TSBV M6x25 9203	BAX TN16-9610	BMP1 3.70x5x17-9309	
S32.. - S50..			TSBV M6x28-9205			
S32.. - S50..	TNM.2204..			BAX TN22-9611	BMP2 5x6x16-9310	

*Suitable Insert is ISO

**Spare Parts Ordering Codes*

INTERNAL TURNING TOOLS

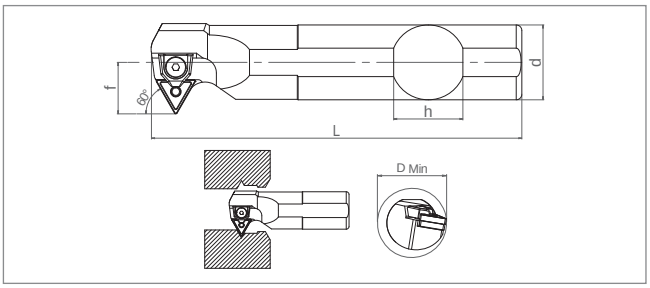

Ordering Code		Item Designation	Dimensions (mm)					Master Insert*
Direction		MT-NR/L (60)	d	h	L	f	D min	
Right	Left							
SM23642	SM23659	S25S MT-NR/L-16	25	23	250	18	≥32	TNM.1604..
SM23673	SM23666	S32T MT-NR/L-16	32	30	300	22	≥40	
SM22379	SM05600	S40U MT-NR/L-16	40	37	350	29.5	≥50	
SM05662	SM05617	S32T MT-NR/L-22	32	30	300	22	≥40	TNM.2204..
SM05693	SM05747	S40U MT-NR/L-22	40	37	350	29.5	≥50	
SM05778	SM05785	S50V MT-NR/L-22	50	47	400	34	≥63	

Descriptions	Master Insert*	Spare Parts					
		Clamp	Screw	Shim	Pin	Stamp	Allen Key
S25..	TNM.1604..	MSK1-9107	TSBV M6x23 9248	BAX TN16-9610	BMP1 3.70x5x17-9309	SAK-AA3-9902	
S32.. - S40..			TSBV M6x28-9205				
S32.. - S50..	TNM.2204..			BAX TN22-9611	BMP2 5x6x16-9310		

*Suitable Insert is ISO
**Spare Parts Ordering Codes

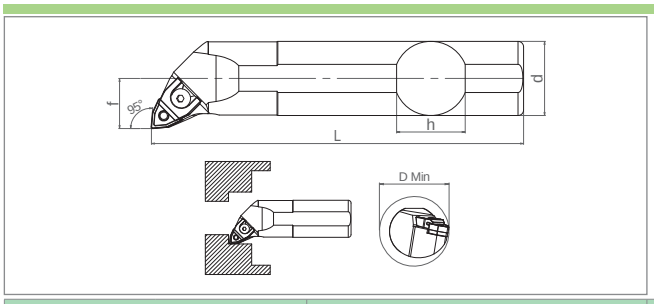

Ordering Code		Item Designation	Dimensions (mm)					Master Insert*
Direction		MWLNR/L (95)	d	h	L	f	D min	
Right	Left							
SM05792	SM05815	S16P MWLNR/L-06	16	15	170	11	≥22	WNM.0604..
SM05808	SM05822	S20R MWLNR/L-06	20	18	200	14.5	≥25	
SM05860	SM05839	S25S MWLNR/L-06	25	23	250	18	≥32	
SM05853	SM05891	S25S MWLNR/L-08	25	23	250	18	≥32	WNM.0804..
SM05877	SM05907	S32T MWLNR/L-08	32	30	300	22	≥40	
SM05884	SM05914	S40U MWLNR/L-08	40	37	350	29.5	≥50	
SM05846	SM05921	S50V MWLNR/L-08	50	47	400	34	≥63	

Descriptions	Master Insert*	Spare Parts					
		Clamp	Screw	Shim	Pin	Stamp	Allen Key
S16..	WNM.0604..	MSK4-9110	TSBV M5x16-9222	-	BMP7 3.70x5x11 9317	SAK-AA3-9902	
S20..							
S25..			TSBV M5x18-9201	BAX WN06-9606			
S25..	WNM.0804..	MSK3-9109	TSBV M6x26-9203	BAX WN08-9607	BMP6 5x6x14-9316		
S32.. - S50..			TSBV M6x28-9205				

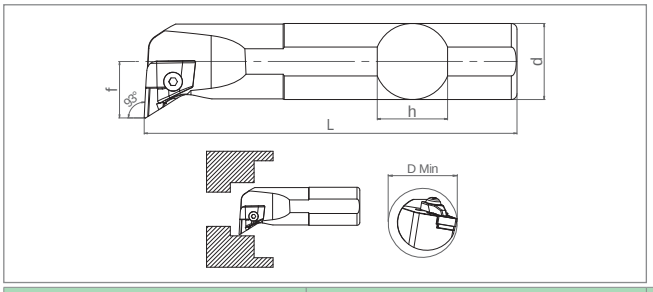

Ordering Code		Item Designation	Dimensions (mm)					Master Insert*
Direction		CKUNR/L (93)	d	h	L	f	D min	
Right	Left							
SM20771	SM20788	S25S CKUNR/L-16	25	23	250	19.5	≥34	KNUX-R/L 1604..
SM20818	SM20825	S32T CKUNR/L-16	32	30	300	22	≥40	
SM20832	SM20849	S40U CKUNR/L-16	40	37	350	29.5	≥50	
SM20856	SM20863	S50V CKUNR/L-16	50	47	400	34	≥63	

Descriptions	Master Insert*	Spare Parts				
S25..	KNUX-R/L 1604..	CSK2/R-9113 CSK2/L-9112	CSBV M6x20-9209	BAX KN/R-16-9621 KN/L-16-9622	CSAV M3x10 9401	SAK-AA4-9903
S32.. - S50..			CSBV1 M6x25-9223			SAK-AA5-9904

*Suitable Insert is ISO

**Spare Parts Ordering Codes*

NOTES

SMOXH®
CUTTING TOOLS

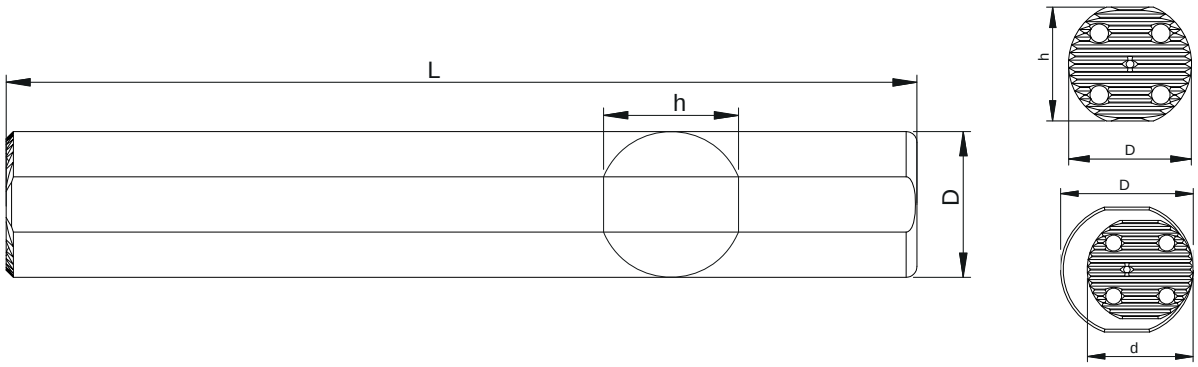

Ordering Code	Item Designation	Dimensions (mm)				
	ECOBODY	*D*	*d*	*L*	*h*	*D Min*
SM79748	S40S ECOBODY-250	40	40	250	37	≥50
SM79755	S40U ECOBODY-350	40	40	350	37	≥50
SM79762	S40W ECOBODY-450	40	40	450	37	≥50
SM79779	S50T ECOBODY-300	50	40	300	47	≥60
SM79786	S50U ECOBODY-350	50	40	350	47	≥60
SM79793	S50X ECOBODY-500	50	40	500	47	≥60
SM79809	S60U ECOBODY-350	60	40	350	57	≥70
SM79816	S60V ECOBODY-400	60	40	400	57	≥70
SM79823	S60X ECOBODY-550	60	40	550	57	≥70

Size Designation	Spare Parts		
	Screw	*Allen Key*	*Centering Part*
S40-S60	BKTV M6x22-9214	SAK-AA4-9903	DMP 8x14-9327

THIS TOOL DOES NOT HAVE ANTI-VIBRATION PROPERTIES.
BU TAKIMDA ANTİ-VİBRASYON ÖZELLİĞİ YOKTUR.

*Suitable Insert is ISO
**Spare Parts Ordering Codes*

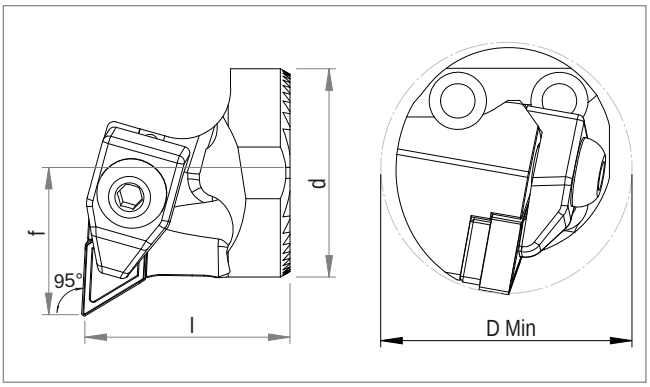

Ordering Code		Item Designation	Dimensions (mm)					Master Insert*
Direction		*E-FIT TDUNR/L (95)*	*d*	*l*	*f*	*D min*	*Holder*	
Right	*Left*							
SM79830	SM79847	E-FIT TDUNR/L-15	40	40	27	≥50	S40.. S50.. S60..	DNM.1506..

Size Designation	Master Insert*	Spare Parts					
		Clamp	*Screw*	*Shim*	*Shim Screw*	*Stamp*	*Allen Key*
E-FIT TDUNR/L	DNM.1506..	TSK1-9101	TSBV M6x28-9205	BAX DN15-9602	TSAV M4x10-9403	TSP 6.5x12-9705	SAK-AA3-9902

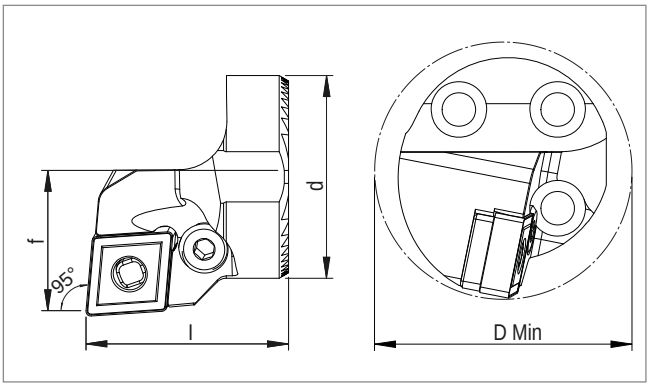

Ordering Code		Item Designation	Dimensions (mm)					Master Insert*
Direction		*E-FIT PCLNR/L (95)*	*d*	*l*	*f*	*D min*	*Holder*	
Right	*Left*							
SM79854	SM79861	E-FIT PCLNR/L-12	40	40	27	≥50	S40.. S50.. S60..	CNM.1204..
SM79878	SM79885	E-FIT PCLNR/L-16	40	40	27	≥50		CNM.1606..

Size Designation	Master Insert*	Spare Parts							
		Lever	*Lever Screw*	*Allen Key*	*Shim Spring*	*Shim*	*Clamp*	*Clamp Screw*	*Torx Key*
E-FIT PCLNR/L	CNM.1204..	SPL1-9120	SLV6 M8x18-9249	SAK-AA3-9902	SLAY1-9701	BAX CN12-9603	PSK2 9126	SSV M3.5x11 9532	STK-T15 9910
	CNM.1606..	SPL2-9121	SLV2 M8x24-9225		SLAY2-9702	BAX CN16-9604			

THIS TOOL DOES NOT HAVE ANTI-VIBRATION PROPERTIES.
BU TAKIMDA ANTİ-VİBRASYON ÖZELLİĞİ YOKTUR.

*Suitable Insert is ISO
**Spare Parts Ordering Codes*

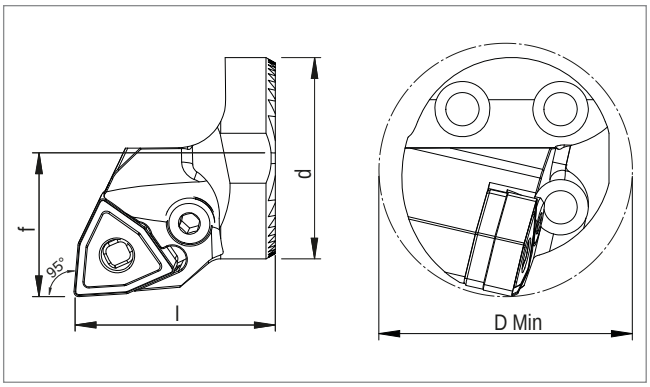

Ordering Code		Item Designation	Dimensions (mm)					Master Insert*
Direction		*E-FIT PWLNR/L (95)*	*d*	*l*	*f*	*D min*	*Holder*	
Right	*Left*							
SM79892	SM79908	E-FIT PWLNR/L-08	40	40	27	≥50	S40.. S50.. S60..	WNM.0804..

Size Designation	Master Insert*	Spare Parts							
		Lever	*Lever Screw*	*Allen Key*	*Shim Spring*	*Shim*	*Clamp*	*Clamp Screw*	*Torx Key*
E-FIT PWLNR/L	WNM.0804..	SPL1-9120	SLV6 M8x18-9249	SAK-AA3-9902	SLAY1-9701	BAX WN08-9607	PSK2 9126	SSV M3.5x11 9532	STK-T15 9910

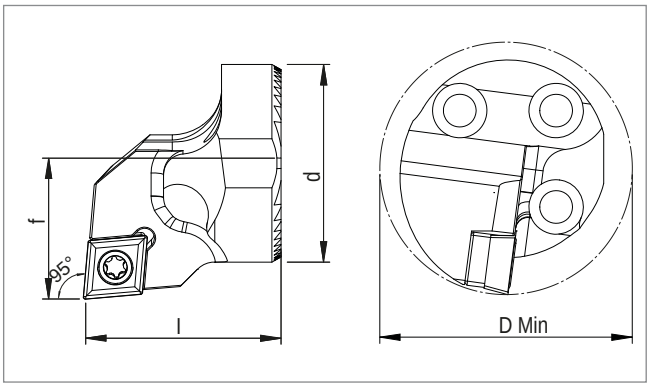

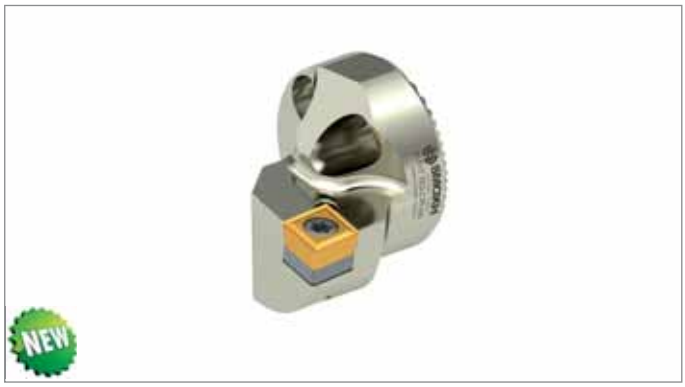

Ordering Code		Item Designation	Dimensions (mm)					Master Insert*
Direction		*E-FIT SCLCR/L (95)*	*d*	*l*	*f*	*D min*	*Holder*	
Right	*Left*							
SM79915	SM79922	E-FIT SCLCR/L-09	40	40	27	≥50	S40.. S50.. S60..	CCM. 09T3..

Descriptions	Master Insert*	Spare Parts			
		Screw	*Shim*	*Shim Screw*	*Torx Key*
S32..	CCM. 09T3..	SSV M3.5x12-9526	BAX CC09-9616	SBV5 M5x0.5 A3.5x9-9408	STK-T15-9910

THIS TOOL DOES NOT HAVE ANTI-VIBRATION PROPERTIES.
BU TAKIMDA ANTİ-VİBRASYON ÖZELLİĞİ YOKTUR.

*Suitable Insert is ISO

**Spare Parts Ordering Codes*

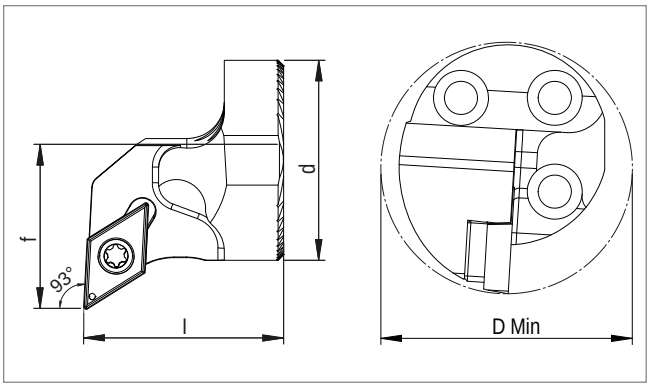

Ordering Code		Item Designation	Dimensions (mm)					Master Insert*
Direction		*E-FIT SDUCR/L (93)*	*d*	*l*	*f*	*D min*	*Holder*	
Right	*Left*							
SM79939	SM79946	E-FIT SDUCR/L-11	40	40	27	≥50	S40.. S50.. S60..	DCM. 11T3..

Descriptions	Master Insert*	Spare Parts			
		Screw	*Shim*	*Shim Screw*	*Torx Key*
E-FIT SDUCR/L-11	DCM. 11T3..	SSV M3.5x14-9512	BAX DC11-9613	SBV M5x0.5 A3.5x11-9407	STK-T15-9910

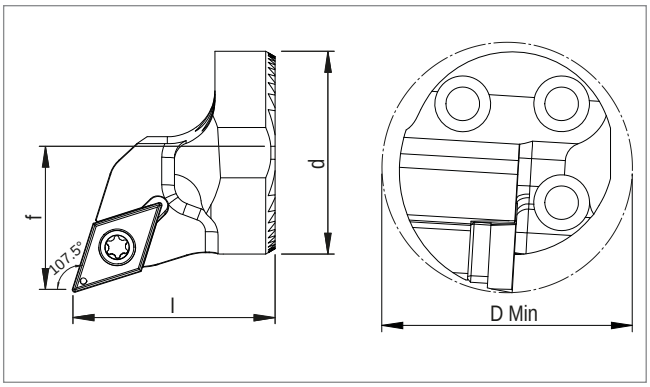

Ordering Code		Item Designation	Dimensions (mm)					Master Insert*
Direction		*E-FIT SDQCR/L (107.5)*	*d*	*l*	*f*	*D min*	*Holder*	
Right	*Left*							
SM79953	SM79960	E-FIT SDQCR/L-11	40	40	27	≥50	S40.. S50.. S60..	DCM. 11T3..

Descriptions	Master Insert*	Spare Parts			
		Screw	*Shim*	*Shim Screw*	*Torx Key*
E-FIT SDQCR/L-11	DCM. 11T3..	SSV M3.5x14-9512	BAX DC11-9613	SBV M5x0.5 A3.5x11-9407	STK-T15-9910

THIS TOOL DOES NOT HAVE ANTI-VIBRATION PROPERTIES.
BU TAKIMDA ANTİ-VİBRASYON ÖZELLİĞİ YOKTUR.

*Suitable Insert is ISO
**Spare Parts Ordering Codes*

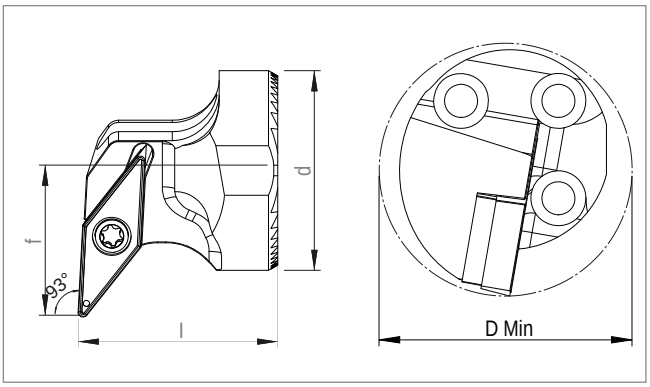

Ordering Code		Item Designation	Dimensions (mm)					Master Insert*
Direction		*E-FIT SVUBR/L (93)*	*d*	*l*	*f*	*D min*	*Holder*	
Right	*Left*							
SM79977	SM79984	E-FIT SVUBR/L-16	40	40	27	≥50	S40.. S50.. S60..	VBM. 1604..

Descriptions	Master Insert*	Spare Parts			
E-FIT SVUBR/L	VBM. 1604..	SSV M3.5x14-9512	BAX VB16-9618	SBV M5x0.5 A3.5x11-9407	STK-T15-9910

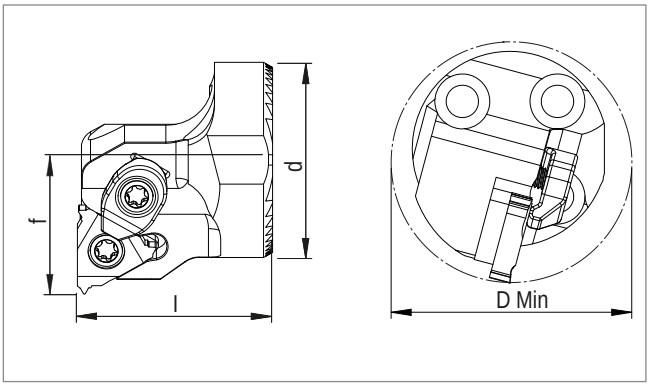

Ordering Code		Item Designation	Dimensions (mm)					Master Insert*
Direction		*E-FIT SIR/L*	*d*	*l*	*f*	*D min*	*Holder*	
Right	*Left*							
SM79991	SM80003	E-FIT SIR/L-16	40	40	27	≥50	S40.. S50.. S60..	16 IR/IL-ISO (0.35-3)
SM80010	SM80027	E-FIT SIR/L-22	40	40	27	≥50		22 IR/IL ISO (3.5-4.5)

Descriptions	Master Insert*	Spare Parts						
		Screw	*Shim*	*Shim Screw*	*Torx Key*	*Clamp*	*Clamp Screw*	*Torx Key*
E-FIT SIR/L	16 IR/IL-ISO (0.35-3)	SSV M3.5x14 9512	BAX ER/L-16-9623	SBV5 M5.05-A3.5x11-9407	STK-T15 9910	PSK2 9126	SSV M3.5x11 9532	STK-T15 9910
	22 IR/IL ISO (3.5-4.5)	SSV M4x12-9515	BAX ER/L-22-9624	SBV3 M6x0.75 A4x10-9412				

THIS TOOL DOES NOT HAVE ANTI-VIBRATION PROPERTIES.
BU TAKIMDA ANTİ-VİBRASYON ÖZELLİĞİ YOKTUR.

*Suitable Insert is ISO

**Spare Parts Ordering Codes*

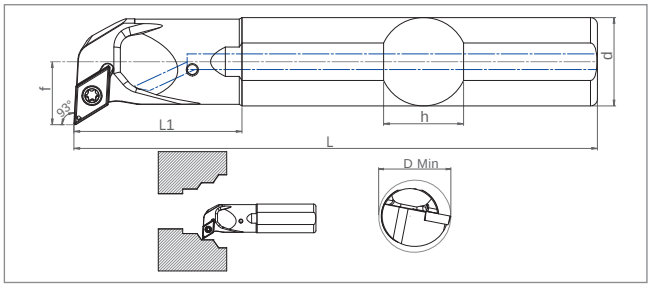

Ordering Code		Item Designation	Dimensions (mm)							Master Insert*
Direction		*A-SDUCR/L(93)*		*d*	*h*	*L*	*f*	*L1*	*D min*	
Right	*Left*									
SM36093	SM36109	A10H SDUCR/L-07	✓	10	9	100	8	-	≥13	DCM. 0702..
SM36116	SM36123	A12H SDUCR/L-07	✓	12	11	100	10	-	≥16	
SM36130	SM36147	A16M SDUCR/L-07	✓	16	15	150	13	-	≥21	
SM36154	SM36161	A16M SDUCR/L-11	✓	16	15	150	13	-	≥21	DCM. 11T3..
SM36178	SM36185	A20P SDUCR/L-11	✓	20	18	170	14.5	-	≥25	
SM36192	SM36208	A25R SDUCR/L-11	✓	25	23	200	19.5	-	≥32	
SM36215	SM36222	A32S SDUCR/L-11	✓	32	30	250	24	-	≥40	

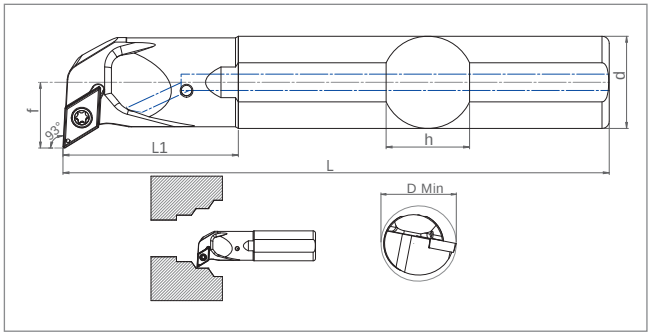

Ordering Code		Item Designation	Dimensions (mm)							Master Insert*
Direction		*A-SDUCR/L(93) SET*		*d*	*h*	*L*	*f*	*L1*	*D min*	
Right	*Left*									
SM59856	SM59863	A10H SDUCR/L-07	✓	10	9	100	8	-	≥13	DCM. 0702..
		A12H SDUCR/L-07	✓	12	11	100	10	-	≥16	
		A16M SDUCR/L-11	✓	16	15	150	13	-	≥21	DCM. 11T3..

Descriptions	Master Insert*	Spare Parts			
		Screw	*Shim*	*Shim Screw*	*Torx Key*
A10.. - A16	DCM. 0702..	SSV M2.5x6-9505	-		STK-T08-9908
A16.. - A20..	DCM. 11T3..	SSV M3.5x10-9511			STK-T15-9910
A25..		SSV M3.5x12-9526	BAX DC11-9613	SBV5 M5x0.5 A3.5x9-9408	
A32..					

*Suitable Insert is ISO
***Spare Parts Ordering Codes*

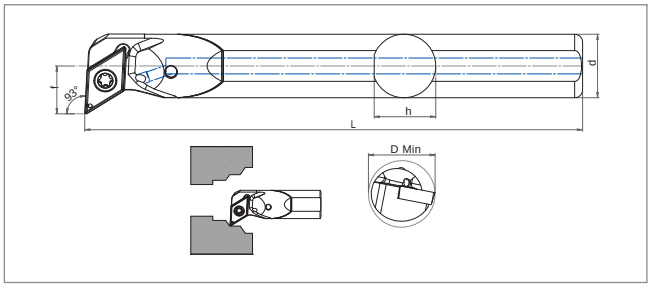

Ordering Code		Item Designation	Dimensions (mm)								Master Insert*
Direction		*E-SDUCR/L(93)*		*d*	*h*	*L*	*f*	*L1*	*D min*		
Right	*Left*										
SM59771	SM59818	E10M SDUCR/L-07	✓	10	9.5	150	8	-	≥13		DCM. 0702..
SM59788	SM59825	E12Q SDUCR/L-07	✓	12	11	180	10	-	≥16		
SM59795	SM59832	E16R SDUCR/L-11	✓	16	15	200	13	-	≥21		DCM. 11T3..
SM59801	SM59849	E20S SDUCR/L-11	✓	20	19	250	15	-	≥25		

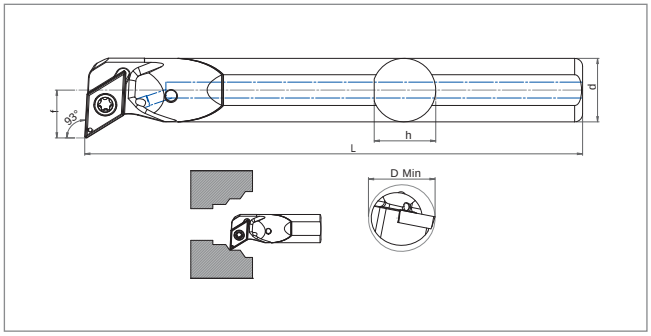

Ordering Code		Item Designation	Dimensions (mm)								Master Insert*
Direction		*E-SDUCR/L(93) SET*		*d*	*h*	*L*	*f*	*L1*	*D min*		
Right	*Left*										
SM59870	SM59887	E10M SDUCR/L-07	✓	10	9.5	150	8	-	≥13		DCM. 0702..
		E12Q SDUCR/L-07	✓	12	11	180	10	-	≥16		
		E16R SDUCR/L-11	✓	16	15	200	13	-	≥21		DCM. 11T3..

Descriptions	Master Insert*	Spare Parts			
		Screw	*Shim*	*Shim Screw*	*Torx Key*
E10.. - E12	DCM. 0702..	SSV M2.5x6-9505	-		STK-T08-9908
E16.. - E20..	DCM. 11T3..	SSV M3.5x10-9511			STK-T15-9910

*Suitable Insert is ISO

***Spare Parts Ordering Codes*

INTERNAL TURNING TOOLS

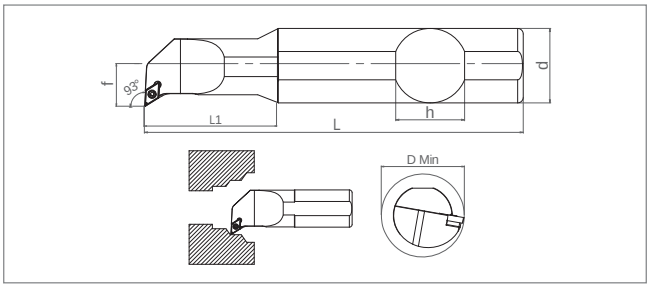

Ordering Code		Item Designation	Dimensions (mm)						Master Insert*
Direction		SDUCR/L(93)	d	h	L	f	L1	D min	
Right	Left								
SM74965	**SM74972**	**S08x10K SDUCR/L-07**	**10**	**9**	**125**	**8**	**35**	**≥13**	DCM. 0702..
SM06713	SM06805	S10K SDUCR/L-07	10	9	125	8	-	≥13	
SM06744	SM06775	S12K SDUCR/L-07	12	11	125	10	-	≥16	
SM06850	SM06935	S16x10M SDUCR/L-07	16	15	150	8	35	≥13	
SM06874	SM06959	S16x12M SDUCR/L-07	16	15	150	10	35	≥16	
SM06836	SM06904	S16P SDUCR/L-07	16	15	170	13	-	≥21	
SM42803	SM42810	S20R SDUCR/L-07	20	18	200	14.5	-	≥25	
SM07017	SM07055	S16P SDUCR/L-11	16	15	170	13	-	≥21	DCM. 11T3..
SM07086	SM07116	S20R SDUCR/L-11	20	18	200	14.5	-	≥25	
SM07147	SM07178	S25S SDUCR/L-11	25	23	250	19.5	-	≥32	
SM39629	SM39636	S25S SDUCR/L-11S	25	23	250	19.5	-	≥32	
SM07253	SM07208	S32T SDUCR/L-11	32	30	300	24	-	≥40	
SM07352	SM07369	S40U SDUCR/L-11	40	37	350	29.5	-	≥50	

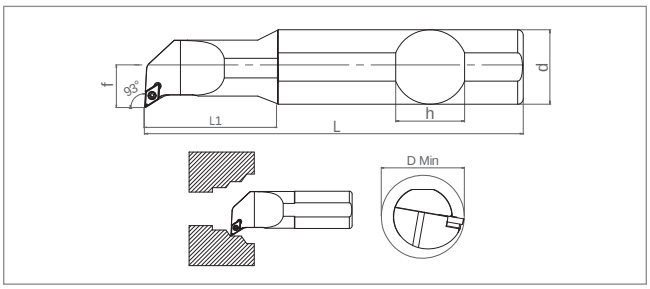

Ordering Code		Item Designation	Dimensions (mm)						Master Insert*
Direction		SDUCR/L(93) SET	d	h	L	f	L1	D min	
Right	Left								
SM59894	SM59900	S10K SDUCR/L-07	10	9	125	8	-	≥13	DCM. 0702..
		S12K SDUCR/L-07	12	11	125	10	-	≥16	
		S16P SDUCR/L-11	16	15	170	13	-	≥21	DCM. 11T3..

Descriptions	Master Insert*	Spare Parts			
		Screw	Shim	Shim Screw	Torx Key
S08.. - S16	DCM. 0702..	SSV M2.5x6-9505	-	-	STK-T08-9908
S20..		SSV M2.5x7-9506			
S16.. - S25..	DCM. 11T3..	SSV M3.5x10-9511			STK-T15-9910
S25(S).. - S32..		SSV M3.5x12-9526	BAX DC11-9613	SBV5 M5x0.5 A3.5x9-9408	
S40..					

*Suitable Insert is ISO
**Spare Parts Ordering Codes

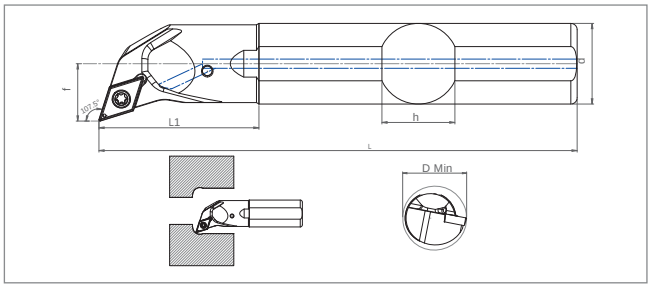

Ordering Code		Item Designation	Dimensions (mm)							Master Insert*
Direction		A-SDQCR/L(107.5)		d	h	L	f	L1	D min	
Right	Left									
SM36239	SM36246	A10H SDQCR/L-07	✓	10	9	100	8	-	≥13	DCM. 0702..
SM36253	SM36260	A12H SDQCR/L-07	✓	12	11	100	10	-	≥16	
SM36277	SM36284	A16M SDQCR/L-07	✓	16	15	150	13	-	≥21	
SM36291	SM36307	A16M SDQCR/L-11	✓	16	15	150	13	-	≥21	DCM. 11T3..
SM36314	SM36321	A20P SDQCR/L-11	✓	20	18	170	14.5	-	≥25	
SM36338	SM36345	A25R SDQCR/L-11	✓	25	23	200	19.5	-	≥32	
SM36352	SM36369	A32S SDQCR/L-11	✓	32	30	250	24	-	≥40	

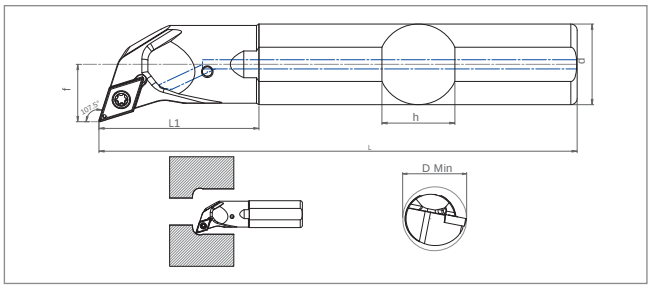

Ordering Code		Item Designation	Dimensions (mm)							Master Insert*
Direction		A-SDQCR/L(107.5) SET		d	h	L	f	L1	D min	
Right	Left									
SM59917	SM59924	A10H SDQCR/L-07	✓	10	9	100	8	-	≥13	DCM. 0702..
		A12H SDQCR/L-07	✓	12	11	100	10	-	≥16	
		A16M SDQCR/L-11	✓	16	15	150	13	-	≥21	DCM. 11T3..

Descriptions	Master Insert*	Spare Parts			
		Screw	Shim	Shim Screw	Torx Key
A10.. - A16..	DCM. 0702..	SSV M2.5x6-9505	-		STK-T08-9908
A16.. - A20..	DCM. 11T3..	SSV M3.5x10-9511			STK-T15-9910
A25..		SSV M3.5x12-9526	BAX DC11-9613	SBV5 M5x0.5 A3.5x9-9408	
A32..					

*Suitable Insert is ISO

**Spare Parts Ordering Codes*

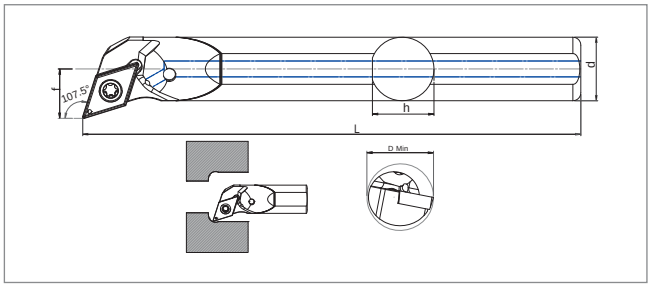

Ordering Code		Item Designation	Dimensions (mm)							Master Insert*
Direction		E-SDQCR/L(107.5)		d	h	L	f	L1	D min	
Right	Left									
SM59979	SM60012	E10M SDQCR/L-07	✓	10	9.5	150	8	-	≥13	DCM. 0702..
SM59986	SM60029	E12Q SDQCR/L-07	✓	12	11	180	10	-	≥16	
SM59993	SM60036	E16R SDQCR/L-11	✓	16	15	200	13	-	≥21	DCM. 11T3..
SM60005	SM60043	E20S SDQCR/L-11	✓	20	19	250	15	-	≥25	

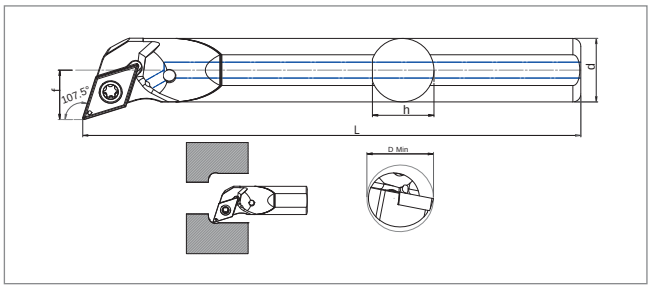

Ordering Code		Item Designation	Dimensions (mm)							Master Insert*
Direction		E-SDQCR/L(107.5) SET		d	h	L	f	L1	D min	
Right	Left									
SM59931	SM59948	E10M SDQCR/L-07	✓	10	9.5	150	8	-	≥13	DCM. 0702..
		E12Q SDQCR/L-07	✓	12	11	180	10	-	≥16	
		E16R SDQCR/L-11	✓	16	15	200	13	-	≥21	DCM. 11T3..

Descriptions	Master Insert*	Spare Parts			
		Screw	Shim	Shim Screw	Torx Key
E10.. - E12	DCM. 0702..	SSV M2.5x6-9505	-	-	STK-T08-9908
E16.. - E20..	DCM. 11T3..	SSV M3.5x10-9511			STK-T15-9910

*Suitable Insert is ISO
**Spare Parts Ordering Codes

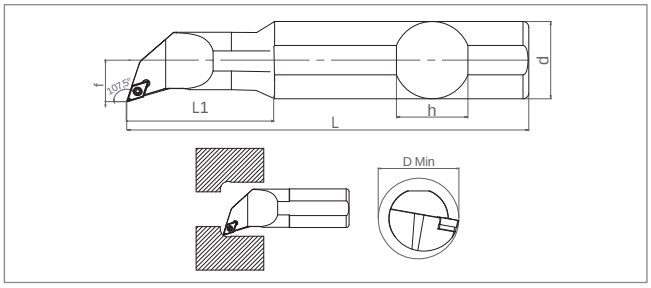

Ordering Code		Item Designation	Dimensions (mm)						Master Insert*
Direction		SDQCR/L(107.5)	d	h	L	f	L1	D min	
Right	Left								
SM06720	SM06737	S10K SDQCR/L-07	10	9	125	8	-	≥13	DCM. 0702..
SM06751	SM06799	S12K SDQCR/L-07	12	11	125	10	-	≥16	
SM06867	SM06942	S16x10M SDQCR/L-07	16	15	150	8	35	≥13	
SM06898	SM06966	S16x12M SDQCR/L-07	16	15	150	10	35	≥16	
SM06911	SM06928	S16P SDQCR/L-07	16	15	170	13	-	≥21	
SM49437	SM49444	S20R SDQCR/L-07	20	18	200	14.5	-	≥25	
SM07031	SM07291	S16P SDQCR/L-11	16	15	170	13	-	≥21	DCM. 11T3..
SM07093	SM07130	S20R SDQCR/L-11	20	18	200	14.5	-	≥25	
SM07161	SM07192	S25S SDQCR/L-11	25	23	250	19.5	-	≥32	
SM39421	SM39414	S25S SDQCR/L-11S	25	23	250	19.5	-	≥32	
SM07239	SM07246	S32T SDQCR/L-11	32	30	300	24	-	≥40	
SM07376	SM07383	S40U SDQCR/L-11	40	37	350	29.5	-	≥50	

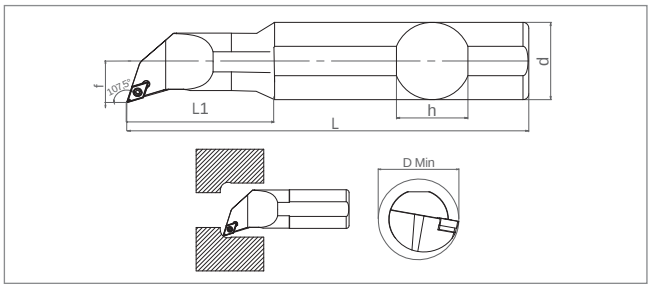

Ordering Code		Item Designation	Dimensions (mm)						Master Insert*
Direction		SDQCR/L(107.5) SET	d	h	L	f	L1	D min	
Right	Left								
SM59955	SM59962	S10K SDQCR/L-07	10	9	125	8	-	≥13	DCM. 0702..
		S12K SDQCR/L-07	12	11	125	10	-	≥16	
		S16P SDQCR/L-11	16	15	170	13	-	≥21	DCM. 11T3..

Descriptions	Master Insert*	Spare Parts			
		Screw	Shim	Shim Screw	Torx Key
S10.. - S20	DCM. 0702..	SSV M2.5x6-9505	-		STK-T08-9908
S16.. - S25..	DCM. 11T3..	SSV M3.5x10-9511			STK-T15-9910
S25(S).. - S32..		SSV M3.5x12-9526	BAX DC11-9613	SBV5 M5x0.5 A3.5x9-9408	
S40..				SBV M5x0.5 A3.5x11-9407	

*Suitable Insert is ISO

**Spare Parts Ordering Codes*

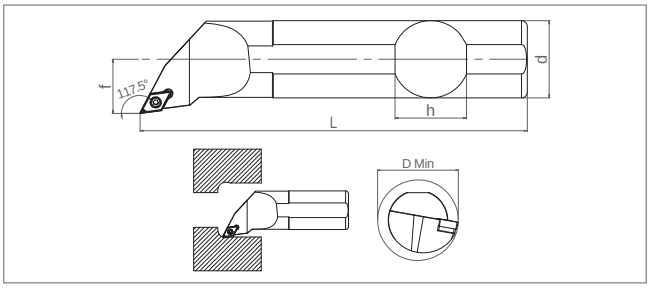

Ordering Code		Item Designation	Dimensions (mm)						Master Insert*
Direction		SDPCR/L(117.5)	d	h	L	f	L1	D min	
Right	Left								
SM06829	SM06973	S10K SDPCR/L-07	10	9	125	8	-	≥13	DCM. 0702..
SM06843	SM06980	S12K SDPCR/L-07	12	11	125	10	-	≥16	
SM07314	SM07390	S16P SDPCR/L-11	16	15	170	13	-	≥21	DCM. 11T3..
SM07338	SM07406	S20R SDPCR/L-11	20	18	200	14.5	-	≥25	
SM07345	SM07413	S25S SDPCR/L-11	25	23	250	19.5	-	≥32	
SM52086	SM52093	S25S SDPCR/L-11S	25	23	250	19.5	-	≥32	
SM07277	SM07437	S32T SDPCR/L-11	32	30	300	24	-	≥40	
SM07475	SM07482	S40U SDPCR/L-11	40	37	350	29.5	-	≥50	

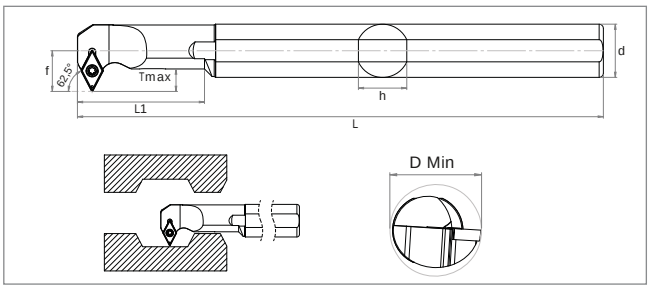

Ordering Code		Item Designation	Dimensions (mm)							Master Insert*
Direction		SD-CR/L(62.5)	d	h	L	f	L1	T max	D min	
Right	Left									
SM42780	SM42797	S10K SD-CR/L-07	10	9	125	9	35	5	≥14	DCM. 0702..
SM06812	SM06782	S12K SD-CR/L-07	12	11	125	10	40	5	≥16	
SM06881	SM07000	S16x12M SD-CR/L-07	16	15	150	11	40	5.8	≥17	
SM07024	SM07062	S16P SD-CR/L-11	16	15	170	13	50	7.5	≥22	DCM. 11T3..
SM07079	SM07123	S20R SD-CR/L-11	20	18	200	15	50	9	≥25	
SM07154	SM07185	S25S SD-CR/L-11	25	23	250	19.5	60	10.2	≥32	
SM07215	SM07222	S32T SD-CR/L-11	32	30	300	24	70	10.5	≥40	
SM07451	SM07468	S40U SD-CR/L-11	40	37	350	29.5	-	-	≥50	

Descriptions	Master Insert*	Spare Parts			
		Screw	Shim	Shim Screw	Torx Key
S10.. - S12	DCM. 0702..	SSV M2.5x6-9505	-		STK-T08-9908
S16.. - S25..	DCM. 11T3..	SSV M3.5x10-9511			STK-T15-9910
S25(S).. - S32..		SSV M3.5x12-9526	BAX DC11-9613	SBV5 M5x0.5 A3.5x9-9408	
S40..				SBV M5x0.5 A3.5x11-9407	

*Suitable Insert is ISO
**Spare Parts Ordering Codes

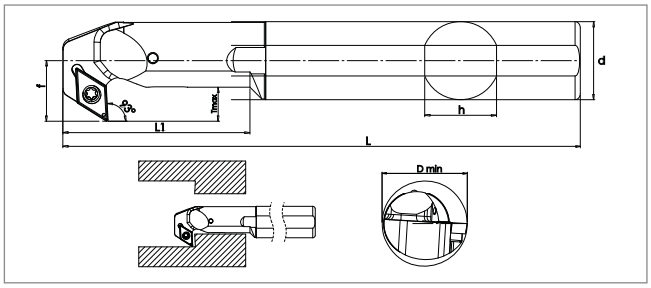

Ordering Code		Item Designation	Dimensions (mm)								Master Insert*
Direction		A-SDXCR/L(93)		d	h	L	f	L1	T max	D min	
Right	Left										
SM73364	SM73401	A12H SDXCR/L-07	✓	12	11	100	10	40	5	≥16	DCM. 0702..
SM73371	SM73418	A16M SDXCR/L-11	✓	16	15	150	13	50	7.5	≥21	DCM. 11T3..
SM73388	SM73425	A20P SDXCR/L-11	✓	20	18	170	15	50	9	≥25	
SM73395	SM73432	A25R SDXCR/L-11	✓	25	23	200	19.5	60	10.2	≥32	

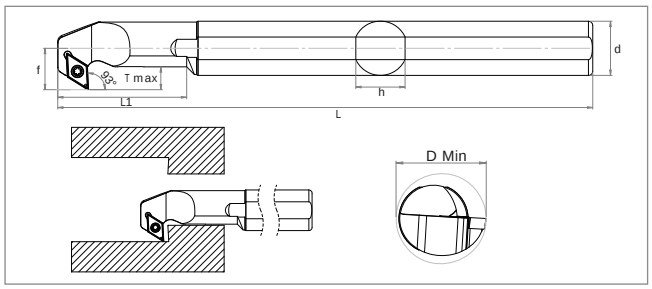

Ordering Code		Item Designation	Dimensions (mm)							Master Insert*
Direction		SDXCR/L(93)	d	h	L	f	L1	T max	D min	
Right	Left									
SM06768	SM06997	S12K SDXCR/L-07	12	11	125	10	40	5	≥16	DCM. 0702..
SM07048	SM07307	S16P SDXCR/L-11	16	15	170	13	50	7.5	≥21	DCM. 11T3..
SM07109	SM07321	S20R SDXCR/L-11	20	18	200	15	50	9	≥25	
SM07260	SM07420	S25S SDXCR/L-11	25	23	250	19.5	60	10.2	≥32	
SM07284	SM07444	S32T SDXCR/L-11	32	30	300	24	70	10.5	≥40	
NEW **SM74910**	**SM74927**	**S25S SDXCR/L-11S**	**25**	**23**	**250**	**19.5**	**60**	**10.2**	**≥32**	
SM07499	SM07505	S40U SDXCR/L-11	40	37	350	29.5	-	-	≥50	

Descriptions	Master Insert*	Spare Parts			
		Screw	Shim	Shim Screw	Torx Key
S10.. - S12	DCM. 0702..	SSV M2.5x6-9505	-		STK-T08-9908
S16.. - S25..	DCM. 11T3..	SSV M3.5x10-9511			STK-T15-9910
S25(S)..		SSV M3.5x12-9526	BAX DC11-9613	SBV5 M5x0.5 A3.5x9-9408	
S32.. - S40..				SBV M5x0.5 A3.5x11-9407	

*Suitable Insert is ISO

**Spare Parts Ordering Codes

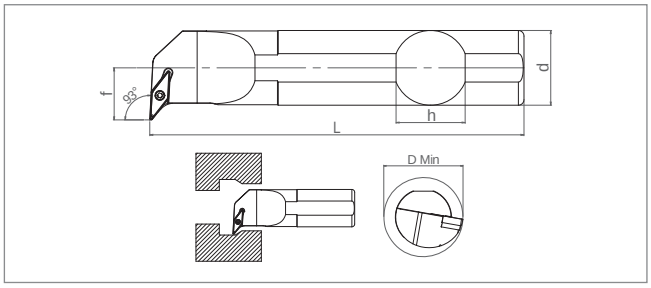

Ordering Code		Item Designation	Dimensions (mm)						Master Insert*
Direction		*SVUBR/L(93)*	*d*	*h*	*L*	*f*	*L1*	*D min*	
Right	*Left*								
SM08298	SM08328	S16P SVUBR/L-11	16	15	170	13	-	≥21	VBM. 1103..
SM08267	SM08342	S20R SVUBR/L-11	20	18	200	14.5	-	≥25	
SM08397	SM08441	S25S SVUBR/L-16	25	23	250	19.5	-	≥32	VBM. 1604..
SM39933	SM39971	S25S SVUBR/L-16S	25	23	250	19.5	-	≥32	
SM08410	SM08472	S32T SVUBR/L-16	32	30	300	24	-	≥40	
SM08502	SM08519	S40U SVUBR/L-16	40	37	350	29.5	-	≥50	

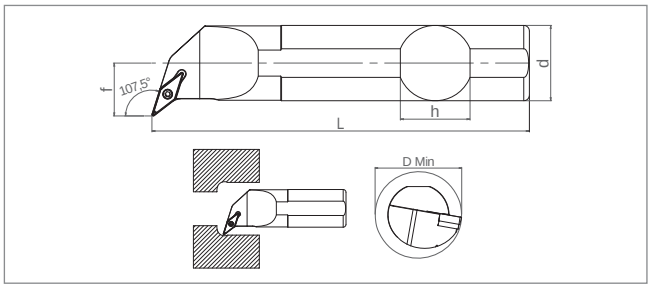

Ordering Code		Item Designation	Dimensions (mm)						Master Insert*
Direction		*SVQBR/L(107.5)*	*d*	*h*	*L*	*f*	*L1*	*D min*	
Right	*Left*								
SM08304	SM08366	S16P SVQBR/L-11	16	15	170	13	-	≥21	VBM. 1103..
SM08274	SM08380	S20R SVQBR/L-11	20	18	200	14.5	-	≥25	
SM08403	SM08434	S25S SVQBR/L-16	25	23	250	19.5	-	≥32	VBM. 1604..
SM39926	SM52055	S25S SVQBR/L-16S	25	23	250	19.5	-	≥32	
SM08465	SM08458	S32T SVQBR/L-16	32	30	300	24	-	≥40	
SM08595	SM08601	S40U SVQBR/L-16	40	37	350	29.5	-	≥50	

Descriptions	Master Insert*	Spare Parts			
S16..	VBM. 1103..	SSV M2.5x6-9505	-		STK-T08-9908
S20..	VBM. 1103..	SSV M2.5x7-9506			
S25..	VBM. 1604..	SSV M3.5x10-9511	BAX VB16-9618	SBV5 M5x0.5 A3.5x9-9408	STK-T15-9910
S25(S)..					
S32.. - S40..		SSV M3.5x12-9526		SBV M5x0.5 A3.5x11-9407	

*Suitable Insert is ISO
***Spare Parts Ordering Codes*

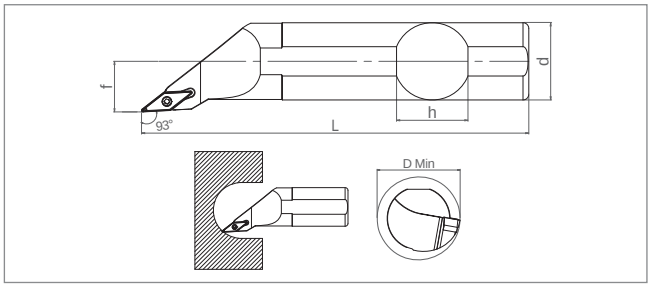

Ordering Code		Item Designation	Dimensions (mm)						Master Insert*
Direction		SVJBR/L(93)	d	h	L	f	L1	D min	
Right	Left								
SM08533	SM08540	S25S SVJBR/L-16	25	23	250	19.5	-	≥32	VBM. 1604..
SM49505	SM49499	S25S SVJBR/L-16S	25	23	250	19.5	-	≥32	
SM08564	SM08571	S32T SVJBR/L-16	32	30	300	24	-	≥40	
SM08618	SM08625	S40U SVJBR/L-16	40	37	350	29.5	-	≥50	

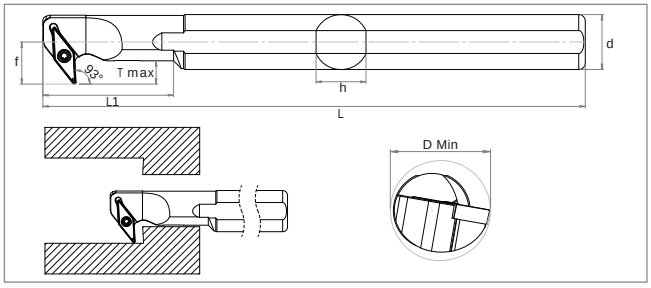

Ordering Code		Item Designation	Dimensions (mm)							Master Insert*
Direction		SVXBR/L(52)	d	h	L	f	L1	T max	D min	
Right	Left									
SM08281	SM08335	S16P SVXBR/L-11	16	15	170	13	50	7.5	≥21	VBM. 1103..
SM08311	SM08359	S20R SVXBR/L-11	20	18	200	15	50	9	≥25	
SM08427	SM08489	S25S SVXBR/L-16	25	23	250	19.5	60	10.2	≥32	VBM. 1604..
SM39964	SM39957	S25S SVXBR/L-16S	25	23	250	19.5	60	10.2	≥32	
SM08496	SM08557	S32T SVXBR/L-16	32	30	300	24	70	10.5	≥40	
SM08526	SM08588	S40U SVXBR/L-16	40	37	350	29.5	-	-	≥50	

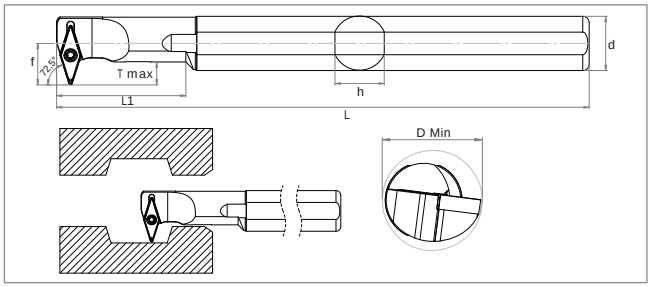

Ordering Code		Item Designation	Dimensions (mm)							Master Insert*
Direction		SV-BR/L(72.5)	d	h	L	f	L1	T max	D min	
Right	Left									
SM34709	SM34716	S25S SV-BR/L-16	25	23	250	19.5	60	10.2	≥32	VBM. 1604..
SM34723	SM34730	S32T SV-BR/L-16	32	30	300	24	70	10.5	≥40	

Descriptions	Master Insert*	Spare Parts			
S16.. - S20	VBM. 1103..	SSV M2.5x6-9505	-		STK-T08-9908
S25..	VBM. 1604..	SSV M3.5x10-9511	BAX VB16-9618	SBV5 M5x0.5 A3.5x9-9408	STK-T15-9910
S25(S)..					
S32.. - S40..		SSV M3.5x12-9526		SBV M5x0.5 A3.5x11-9407	

*Suitable Insert is ISO

**Spare Parts Ordering Codes*

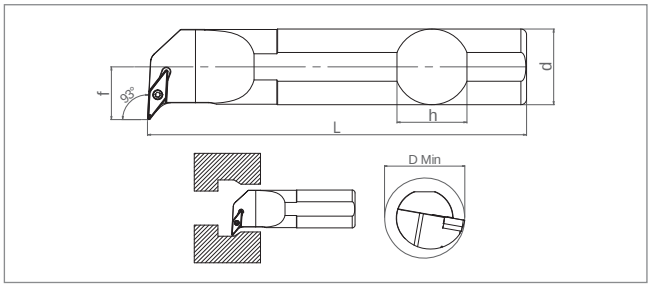

Ordering Code		Item Designation	Dimensions (mm)						Master Insert*
Direction		SVUCR/L(93)	d	h	L	f	L1	D min	
Right	Left								
SM08373	SM08632	S16P SVUCR/L-11	16	15	170	13	-	≥21	VCM. 1103..
SM08656	SM08663	S20R SVUCR/L-11	20	18	200	14.5	-	≥25	
SM08717	SM08724	S25S SVUCR/L-16	25	23	250	19.5	-	≥32	VCM. 1604..
SM39988	SM52017	S25S SVUCR/L-16S	25	23	250	19.5	-	≥32	
SM08731	SM08748	S32T SVUCR/L-16	32	30	300	24	-	≥40	
SM08755	SM08762	S40U SVUCR/L-16	40	37	350	29.5	-	≥50	

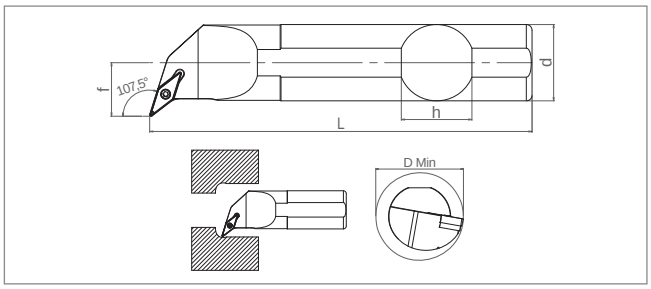

Ordering Code		Item Designation	Dimensions (mm)						Master Insert*
Direction		SVQCR/L(107.5)	d	h	L	f	L1	D min	
Right	Left								
SM08649	SM08694	S16P SVQCR/L-11	16	15	170	13	-	≥21	VCM. 1103..
SM08670	SM08700	S20R SVQCR/L-11	20	18	200	14.5	-	≥25	
SM08779	SM08786	S25S SVQCR/L-16	25	23	250	19.5	-	≥32	VCM. 1604..
SM49475	SM49482	S25S SVQCR/L-16S	25	23	250	19.5	-	≥32	
SM08793	SM08809	S32T SVQCR/L-16	32	30	300	24	-	≥40	
SM08816	SM08823	S40U SVQCR/L-16	40	37	350	29.5	-	≥50	

Descriptions	Master Insert*	Spare Parts			
		Screw	Shim	Shim Screw	Torx Key
S16..	VCM. 1103..	SSV M2.5x6-9505	-		STK-T08-9908
S20..		SSV M2.5x7-9506			
S25..	VCM. 1604..	SSV M3.5x10-9511			STK-T15-9910
S25(S)..			BAX VC16-9620	SBV5 M5x0.5 A3.5x9-9408	
S32.. - S40..		SSV M3.5x12-9526			

*Suitable Insert is ISO
**Spare Parts Ordering Codes

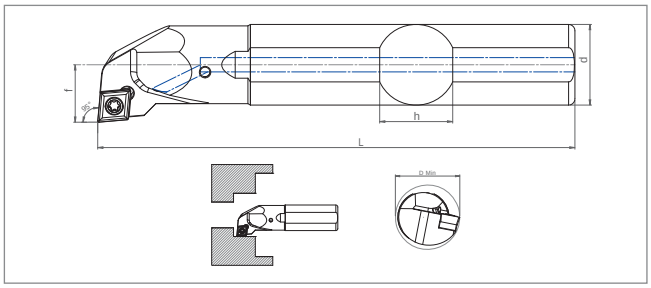

Ordering Code		Item Designation	Dimensions (mm)							Master Insert*
Direction		A-SCLCR/L(95)		d	h	L	f	L1	D min	
Right	Left									
SM36376	SM36383	A08H SCLCR/L-06	✓	8	7	100	7	-	≥11	CCM. 0602..
SM36390	SM36406	A10H SCLCR/L-06	✓	10	9	100	8	-	≥13	
SM36413	SM36420	A12H SCLCR/L-06	✓	12	11	100	10	-	≥16	
SM36437	SM36444	A16M SCLCR/L-09	✓	16	15	150	13	-	≥21	CCM. 09T3..
SM36451	SM36468	A20P SCLCR/L-09	✓	20	18	170	14.5	-	≥25	
SM36475	SM36482	A25R SCLCR/L-09	✓	25	23	200	19.5	-	≥32	
SM36499	SM36505	A32S SCLCR/L-09	✓	32	30	250	24	-	≥40	

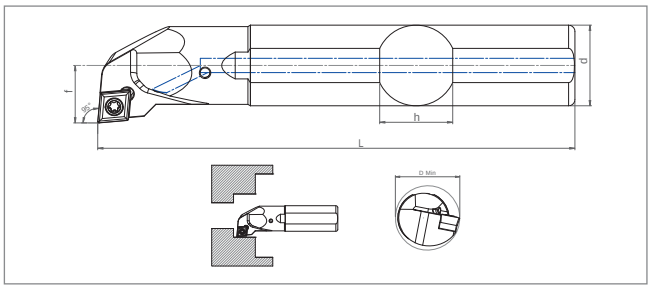

Ordering Code		Item Designation	Dimensions (mm)							Master Insert*
Direction		A-SCLCR/L(95) SET		d	h	L	f	L1	D min	
Right	Left									
SM60050	SM60067	A08H SCLCR/L-06	✓	8	7	100	7	-	≥11	CCM. 0602..
		A10H SCLCR/L-06	✓	10	9	100	8	-	≥13	
		A12H SCLCR/L-06	✓	12	11	100	10	-	≥16	
		A16M SCLCR/L-09	✓	16	15	150	13	-	≥21	CCM. 09T3..

Descriptions	Master Insert*	Spare Parts			
		Screw	Shim	Shim Screw	Torx Key
A0608.. - A08	CCM. 0602..	SSV M2.5x5-9504	-	-	STK-T08-9908
A10.. - A12		SSV M2.5x6-9505			
A12.. - A16	CCM. 09T3..	SSV M3.5x8-9510	-		STK-T15-9910
A20.. - A20..					
A25..			BAX CC09-9616	SBV5 M5x0.5 A3.5x9-9408	
A32..		SSV M3.5x10-9511			

*Suitable Insert is ISO

**Spare Parts Ordering Codes*

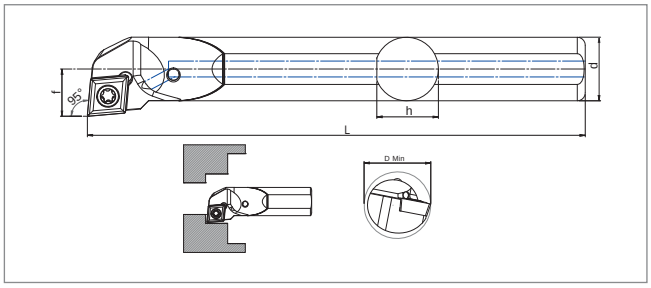

Ordering Code		Item Designation	Dimensions (mm)							Master Insert*
Direction		E-SCLCR/L(95)		d	h	L	f	L1	D min	
Right	Left									
SM60074	SM60135	E08K SCLCR/L-06	✓	8	7.5	125	6	11	≥13	CCM. 0602..
SM60081	SM60142	E10M SCLCR/L-06	✓	10	9.5	150	8	13	≥16	
SM60098	SM60159	E12Q SCLCR/L-06	✓	12	11	180	10	16	≥21	
SM60104	SM60166	E12Q SCLCR/L-09	✓	12	11	180	10	16	≥25	CCM. 09T3
SM60111	SM60173	E16R SCLCR/L-09	✓	16	15	200	13	21	≥21	
SM60128	SM60180	E20S SCLCR/L-09	✓	20	19	250	15	25	≥25	

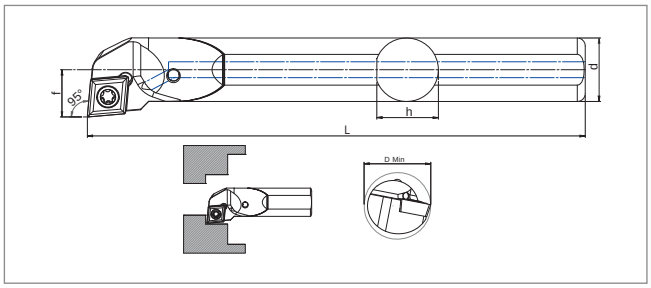

Ordering Code		Item Designation	Dimensions (mm)							Master Insert*
Direction		E-SCLCR/L(95) SET		d	h	L	f	L1	D min	
Right	Left									
SM60197	SM60203	E08K SCLCR/L-06	✓	8	7.5	125	6	11	≥13	CCM. 0602..
		E10M SCLCR/L-06	✓	10	9.5	150	8	13	≥16	
		E12Q SCLCR/L-06	✓	12	11	180	10	16	≥21	
		E16R SCLCR/L-09	✓	16	15	200	13	21	≥21	CCM. 09T3

Descriptions	Master Insert*	Spare Parts			
		Screw	Shim	Shim Screw	Torx Key
E08..	CCM. 0602..	SSV M2.5x5-9504	-	-	STK-T08-9908
E10.. - E12		SSV M2.5x6-9505			
E16..	CCM. 09T3..	SSV M3.5x8-9510	-		STK-T15-9910

*Suitable Insert is ISO
**Spare Parts Ordering Codes

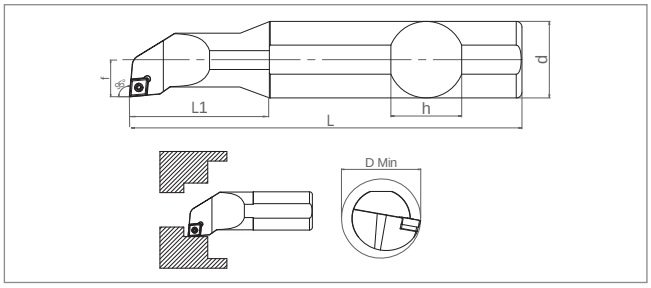

Ordering Code		Item Designation	Dimensions (mm)						Master Insert*
Direction		SCLCR/L(95)	d	h	L	f	L1	D min	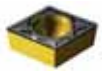
Right	Left								
SM64379	**SM64386**	**S05x08H SCLCR/L-03**	**8**	**5**	**100**	**3**	**18**	≥6	CCM.0302.
SM06393	SM06461	S06x08H SCLCR/L-06	6	7	100	5	25	≥8	CCM. 0602..
SM06317	SM06362	S08H SCLCR/L-06	8	7	100	7	-	≥11	
SM06324	SM06331	S10K SCLCR/L-06	10	9	125	8	-	≥13	
SM06348	SM06355	S12K SCLCR/L-06	12	11	125	10	-	≥16	
SM06386	SM26049	S16x10M SCLCR/L-06	16	15	150	8	35	≥13	
SM06379	SM26056	S16x12M SCLCR/L-06	16	15	150	10	35	≥16	
SM00548	SM00555	S16P SCLCR/L-06	16	15	170	13	-	≥21	
SM37793	SM37809	S12K SCLCR/L-09	12	11	125	10	-	≥16	CCM. 09T3
SM06478	SM06485	S16P SCLCR/L-09	16	15	170	13	-	≥21	
SM06492	SM06508	S20R SCLCR/L-09	20	18	200	14.5	-	≥25	
SM06515	SM06522	S25S SCLCR/L-09	25	23	250	19.5	-	≥32	
SM39438	SM39445	S25S SCLCR/L-09S	25	23	250	19.5	-	≥32	
SM06539	SM06546	S32T SCLCR/L-09	32	30	300	24	-	≥40	
SM49451	SM49468	S25S SCLCR/L-12	25	23	250	19.5	-	≥32	CCM.1204..
SM06638	SM06645	S32T SCLCR/L-12	32	30	300	24	-	≥40	
SM06676	SM06683	S40U SCLCR/L-12	40	37	350	29.	-	≥50	

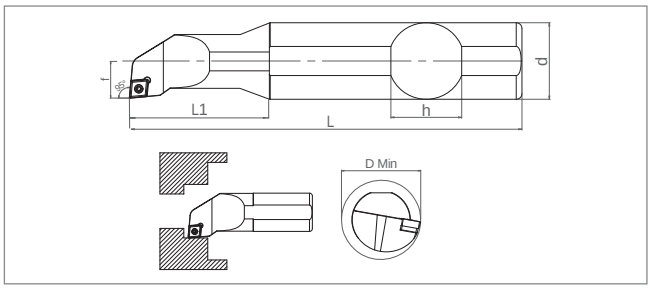

Ordering Code		Item Designation	Dimensions (mm)						Master Insert*
Direction		SCLCR/L(95) SET	d	h	L	f	L1	D min	
Right	Left								
SM60210	SM60227	S08H SCLCR/L-06	8	7	100	7	-	≥11	CCM. 0602..
		S10K SCLCR/L-06	10	9	125	8	-	≥13	
		S12K SCLCR/L-06	12	11	125	10	-	≥16	
		S16P SCLCR/L-09	16	15	170	13	-	≥21	CCM. 09T3

*Suitable Insert is ISO
**Spare Parts Ordering Codes*

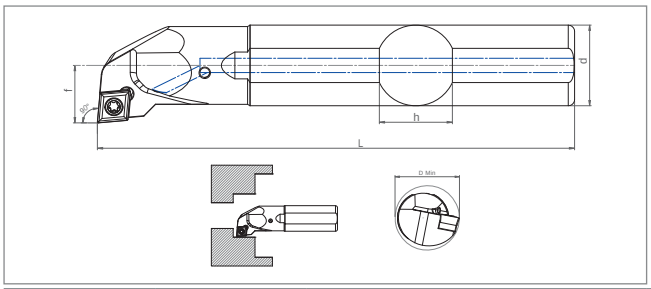

Ordering Code		Item Designation	Dimensions (mm)							Master Insert*
Direction		A-SCFCR/L(90)		d	h	L	f	L1	D min	
Right	Left									
SM73203	**SM73210**	**A08H SCFCR/L-06**	✓	**8**	**7**	**100**	**7**	**-**	**≥11**	CCM. 0602..
SM73227	**SM73234**	**A10H SCFCR/L-06**	✓	**10**	**9**	**100**	**8**	**-**	**≥13**	
SM73241	**SM73258**	**A12H SCFCR/L-06**	✓	**12**	**11**	**100**	**10**	**-**	**≥16**	
SM73265	**SM73272**	**A16M SCFCR/L-09**	✓	**16**	**15**	**150**	**13**	**-**	**≥21**	CCM. 09T3..

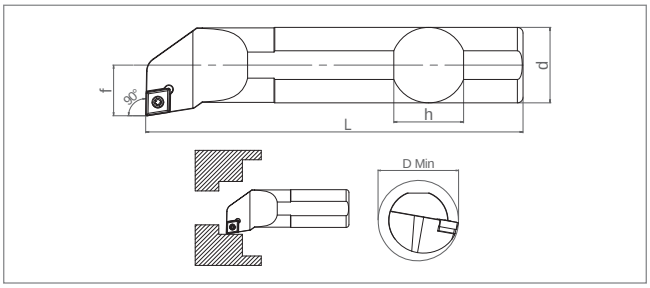

Ordering Code		Item Designation	Dimensions (mm)						Master Insert*
Direction		SCFCR/L(90)	d	h	L	f	L1	D min	
Right	Left								
SM06409	SM06416	S08H SCFCR/L-06	8	7	100	7	-	≥11	CCM. 0602..
SM06423	SM06430	S10K SCFCR/L-06	10	9	125	8	-	≥13	
SM06447	SM06454	S12K SCFCR/L-06	12	11	125	10	-	≥16	
SM37816	SM37823	S12K SCFCR/L-09	12	11	125	10	-	≥16	CCM. 09T3..
SM06553	SM06560	S16P SCFCR/L-09	16	15	170	13	-	≥21	
SM06577	SM06584	S20R SCFCR/L-09	20	18	200	14.5	-	≥25	
SM06591	SM06607	S25S SCFCR/L-09	25	23	250	19.5	-	≥32	
SM06614	SM06621	S25S SCFCR/L-12	25	23	250	19.5	-	≥32	CCM.1204..
SM06652	SM06669	S32T SCFCR/L-12	32	30	300	24	-	≥40	
SM06690	SM06706	S40U SCFCR/L-12	40	37	350	29.5	-	≥50	

Descriptions	Master Insert*	Spare Parts			
		Screw	Shim	Shim Screw	Torx Key
S0508..	CCM. 0302..	SSV M1.6x3-9546	-	-	STK-T06-9906
S0608.. - S08	CCM. 0602..	SSV M2.5x5-9504	-	-	STK-T08-9908
S10.. - S16		SSV M2.5x6-9505			
S12.. - S20..	CCM. 09T3..	SSV M3.5x8-9510	-	-	STK-T15-9910
S20.. - S25..		SSV M3.5x10-9511	BAX CC09-9616	SBV5 M5x0.5 A3.5x9-9408	
S25(S)..					
S32..		SSV M3.5x12-9526			
S25..	CCM. 1204..	SSV M4x10x6-9550	-	-	
S32.. - S40..			BAX CC12-9617	SBV4 M6x0.75 A4x9 9411	

*Suitable Insert is ISO
*Spare Parts Ordering Codes

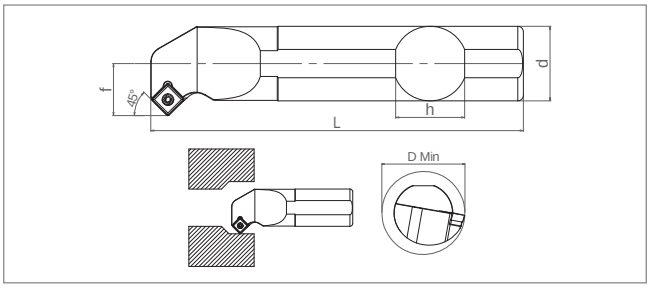

Ordering Code		Item Designation	Dimensions (mm)						Master Insert*
Direction		*SSSCR/L(45)*	*d*	*h*	*L*	*f*	*L1*	*D min*	
Right	*Left*								
SM07512	SM07543	S16P SSSCR/L-09	16	15	170	13	-	≥21	SCM. 09T3..
SM07529	SM07550	S20R SSSCR/L-09	20	18	200	14.5	-	≥25	
SM07536	SM07574	S25S SSSCR/L-09	25	23	250	19.5	-	≥32	
SM49512	SM49529	S25S SSSCR/L-12	25	23	250	19.5	-	≥32	SCM. 1204..
SM07604	SM07581	S32T SSSCR/L-12	32	30	300	24	-	≥40	
SM07611	SM07598	S40U SSSCR/L-12	40	37	350	29.5	-	≥50	

Descriptions	Master Insert*	Spare Parts			
		Screw	*Shim*	*Shim Screw*	*Torx Key*
S16.. - S25	SCM. 09T3..	SSV M3.5x10-9511	-	-	STK-T15-9910
S25..	SCM. 1204..	SSV M4x10x6-9550	-		
S32.. - S40..			BAX SC12-9615	SBV4 M6x0.75 A4x9-9411	

*Suitable Insert is ISO

**Spare Parts Ordering Codes*

INTERNAL TURNING TOOLS

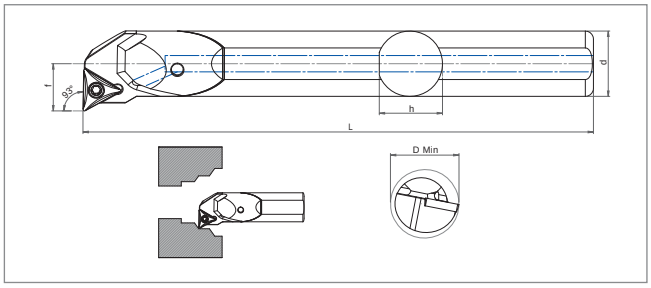

Ordering Code		Item Designation	Dimensions (mm)							Master Insert*
Direction		E-STUCR/L(93)		d	h	L	f	L1	D min	
Right	Left									
SM60234	SM60272	E10M STUCR/L-09	✓	10	9.5	150	8	-	≥13	TCM.0902..
SM60241	SM60289	E12Q STUCR/L-09	✓	12	11	180	10	-	≥16	
SM60258	SM60296	E12Q STUCR/L-11	✓	12	11	180	10	-	≥21	TCM.1102..
SM60265	SM60302	E16R STUCR/L-11	✓	16	15	200	13	-	≥25	

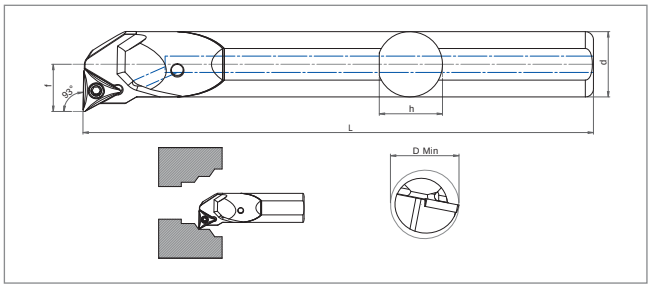

Ordering Code		Item Designation	Dimensions (mm)							Master Insert*
Direction		E-STUCR/L(93) SET		d	h	L	f	L1	D min	
Right	Left									
SM60319	SM60326	E10M STUCR/L-09	✓	10	9.5	150	8	-	≥13	TCM.0902..
		E12Q STUCR/L-09	✓	12	11	180	10	-	≥16	
		E16R STUCR/L-11	✓	16	15	200	13	-	≥25	TCM.1102..

Descriptions	Master Insert*	Spare Parts			
		Screw	Shim	Shim Screw	Torx Key
E10.. - E12..	TCM.0902..	SSV M2.2x5-9503	-	-	STK-T06-9906
E16..	TCM.1102..	SSV M2.5x5-9504			STK-T08-9908

*Suitable Insert is ISO
**Spare Parts Ordering Codes

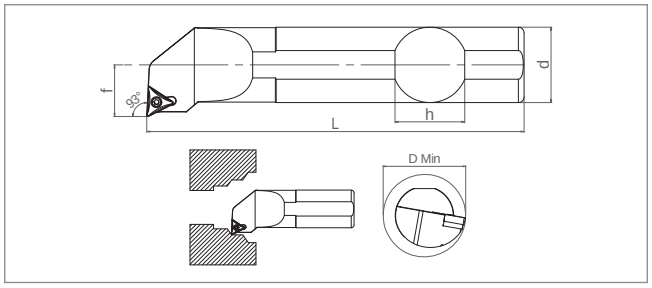

Ordering Code		Item Designation	Dimensions (mm)						Master Insert*
Direction		STUCR/L(93)	d	h	L	f	L1	D min	
Right	Left								
SM74989	**SM74996**	**S08H STUCR/L-06**	**8**	**7**	**100**	**7**	**-**	**≥11**	TCM.06T1..
SM07642	SM07659	S10K STUCR/L-09	10	9	125	8	-	≥13	TCM.0902..
SM07680	SM07697	S12K STUCR/L-09	12	11	125	10	-	≥16	
SM07802	SM07789	S10K STUCR/L-11	10	9	125	8	-	≥13	TCM.1102..
SM07741	SM07772	S12K STUCR/L-11	12	11	125	10	-	≥16	
SM07840	SM07857	S16P STUCR/L-11	16	15	170	13	-	≥21	
SM07901	SM07918	S20R STUCR/L-11	20	18	200	14.5	-	≥25	
SM07963	SM08076	S16P STUCR/L-16	16	15	170	13	-	≥21	TCM.16T3..
SM07970	SM08113	S20R STUCR/L-16	20	18	200	14.5	-	≥25	
SM07987	SM08083	S25S STUCR/L-16	25	23	250	19.5	-	≥32	
SM39483	SM39476	S25S STUCR/L-16S	25	23	250	19.5	-	≥32	
SM08168	SM08175	S32T STUCR/L-16	32	30	300	24	-	≥40	
SM08205	SM08212	S40U STUCR/L-16	40	37	350	29.5	-	≥50	

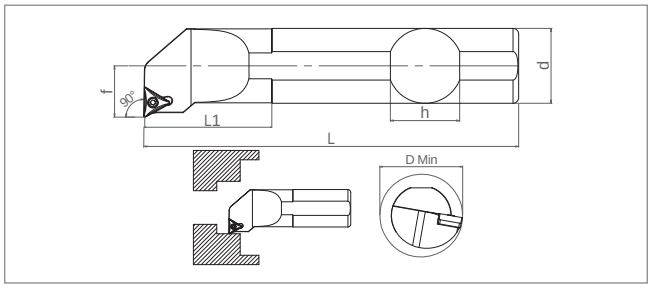

Ordering Code		Item Designation	Dimensions (mm)						Master Insert*
Direction		STFCR/L(90)	d	h	L	f	L1	D min	
Right	Left								
SM07628	SM07635	S10x06K STFCR/L-06	10	9	125	5	30	≥08	TCM.06T1..
SM07666	SM07673	S10K STFCR/L-09	10	9	125	8	-	≥13	TCM.0902..
SM07703	SM07710	S12K STFCR/L-09	12	11	125	10	-	≥16	
SM07819	SM07796	S10K STFCR/L-11	10	9	125	8	-	≥13	TCM.1102..
SM07826	SM07833	S12K STFCR/L-11	12	11	125	10	-	≥16	
SM07864	SM07871	S16P STFCR/L-11	16	15	170	13	-	≥21	
SM07925	SM07932	S20R STFCR/L-11	20	18	200	14.5	-	≥25	
SM08090	SM08106	S16P STFCR/L-16	16	15	170	13	-	≥21	TCM.16T3..
SM08120	SM08137	S20R STFCR/L-16	20	18	200	14.5	-	≥25	
SM08144	SM08151	S25S STFCR/L-16	25	23	250	19.5	-	≥32	
SM39452	SM39469	S25S STFCR/L-16S	25	23	250	19.5	-	≥32	
SM08182	SM08199	S32T STFCR/L-16	32	30	300	24	-	≥40	
SM08229	SM08236	S40U STFCR/L-16	40	37	350	29.5	-	≥50	

*Suitable Insert is ISO

**Spare Parts Ordering Codes*

INTERNAL TURNING TOOLS

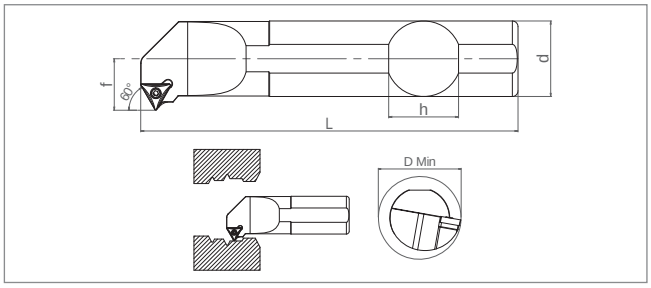

Ordering Code		Item Designation	Dimensions (mm)						Master Insert*
Direction		*ST-CR/L(60)*	*d*	*h*	*L*	*f*	*L1*	*D min*	
Right	*Left*								
SM07727	SM07734	S12K ST-CR/L-09	12	11	125	9	-	≥17	TCM.0902..
SM07758	SM07765	S12K ST-CR/L-11	12	11	125	11	-	≥17	TCM.1102..
SM07888	SM07895	S16P ST-CR/L-11	16	15	170	13	-	≥21	
SM07949	SM07956	S20R ST-CR/L-11	20	18	200	15	-	≥25	
SM07994	SM08007	S16P ST-CR/L-16	16	15	170	13	-	≥21	TCM.16T3.
SM08014	SM08021	S20R ST-CR/L-16	20	18	200	15	-	≥25	
SM08038	SM08045	S25S ST-CR/L-16	25	23	250	19.5	-	≥32	
SM08052	SM08069	S32T ST-CR/L-16	32	30	300	24	-	≥40	
SM08243	SM08250	S40U ST-CR/L-16	40	37	350	30	-	≥50	

Descriptions	Master Insert*	Spare Parts			
		Screw	*Shim*	*Shim Screw*	*Torx Key*
S08.. - S10x06	TCM.06T1..	SSV M2x4-9521	-	-	STK-T06-9906
S10.. - S12..	TCM.0902..	SSV M2.2x5-9503			
S10.. - S16..	TCM.1102..	SSV M2.5x5-9504			STK-T08-9908
S20..		SSV M2.5x7-9506	-	-	
S16.. - S25..	TCM.16T3..	SSV M3.5x10-9511	-	-	STK-T15-9910
S25(S)..			BAX TC16-9619	SBV5 M5x0.5 A3.5x9-9408	
S32.. - S40..		SSV M3.5x14-9512		SBV M5.05 A3.5x11-9407	

*Suitable Insert is ISO
***Spare Parts Ordering Codes*

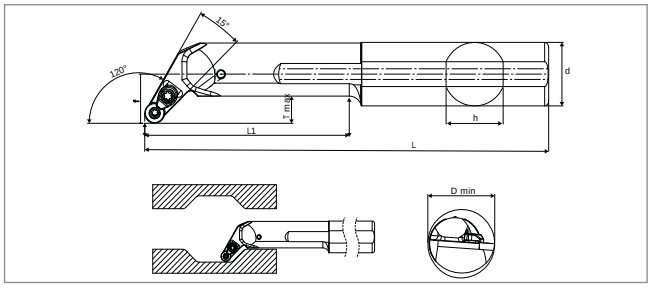

Ordering Code		Item Designation	Dimensions (mm)								Master Insert*
Direction		SRGCR/L		d	h	L	f	L1	T Max	D min	
Right	Left										
SM73562	**SM73593**	**A16M SRGCR/L-08**	✓	**16**	**15**	**150**	**13**	**65**	**7.5**	**≥21**	RC.T 0803..
SM73579	**SM73609**	**A20P SRGCR/L-08**	✓	**20**	**18**	**170**	**15**	**65**	**9**	**≥25**	
SM73586	**SM73616**	**A25R SRGCR/L-08**	✓	**25**	**23**	**200**	**19.5**	**80**	**10.2**	**≥32**	
SM73487	SM73524	S16M SRGCR/L-08	-	16	15	150	13	65	7.5	≥21	
SM73494	SM73531	S20P SRGCR/L-08	-	20	18	170	15	65	9	≥25	
SM73500	SM73548	S25R SRGCR/L-08	-	25	23	200	19.5	80	10.2	≥32	
SM73517	SM73555	S32S SRGCR/L-08	-	32	30	250	24	95	13	≥40	

Descriptions	Master Insert*	Spare Parts				
		Insert Screw	Clamp Screw	Clamp	Torx Key	Torx Key
S16..	RC.T 0803..	SSV M3x6-9507	SSV M3.5x11-9532	PSK4-9128	STK-T15 9910	STK-T08 9908
S20.. - S32..		SSV M3x7-9527				

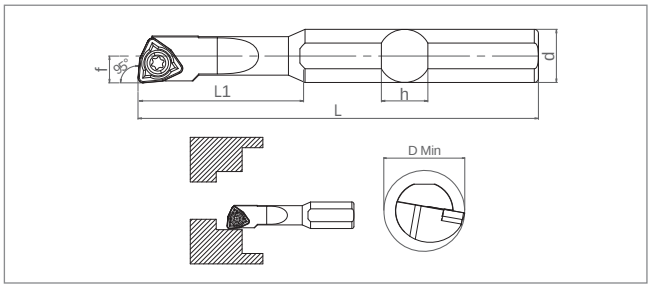

Ordering Code		Item Designation	Dimensions (mm)						Master Insert*
Direction		SWLCR/L(95)	d	h	L	f	L1	D min	
Right	Left								
SM08854	SM08830	S0608H SWLCR/L-03	8	7	100	4	25	≥08	WCM.0302..
SM08861	SM08847	S0810K SWLCR/L-03	10	9	125	6	30	≥10	

Descriptions	Master Insert*	Spare Parts			
		Screw	Shim	Shim Screw	Torx Key
S0608.. - S0810..	WCM.0302..	SSV M2.5x5-T06-9540	-	-	STK-T08-9908

*Suitable Insert is ISO

**Spare Parts Ordering Codes*

NOTES

SMOXH®
CUTTING TOOLS

External Parting & Grooving Tools

C

- **Blade** Tools
- **External** Groving Tools
- **Swiss** Type Groving Tools
- **Face** Groving Tools

Insert			SP 2C-3C-4C	MGM. 2C	MGM. 2.5C	MGM. 3C	MGM. 4C	MGM. 5C	MGM. 6C
Size (mm)			26 - 32	#1212 - 3232	#2020 - 2525	#1212 - 3232	#2020 - 3232	#2020 - 3232	#2525 - 3232
Item Code			SML	BDKT R/L	BDKT R/L	BDKT R/L	BDKT R/L	BDKT R/L	BDKT R/L
T Max. (mm)			15-18mm	15-18mm	18mm	18-40mm	20-40mm	20-40mm	25mm
Application Type	**External Grooving**	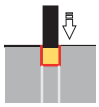	-	✓	✓	✓	✓	✓	✓
	Page		**C155**	**C162**	**C162**	**C162**	**C162**	**C162**	**C162**
	Long Ext. Grooving	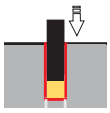	-	-	-	✓ T40mm	✓ T40mm	✓ T40mm	-
	Page					**C162**	**C162**	**C162**	
	External Turning	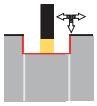	-	-	-	-	-	-	-
	Page								
	Swiss Type	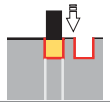		✓	-	✓	✓		
	Page			**C178**		**C178**	**C178**		
	Parting (Blade)	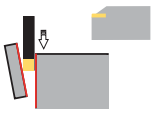	✓	✓	-	✓	✓	-	-
	Page		**C155**	**C155**		**C155**	**C155**		
	Edge Grooving	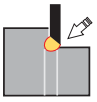	-	-	-	-	-	-	-
	Page								
	Face Grooving		-	-	-	✓	✓	✓	-
	Page					**C184-185**	**C184-185**	**C184-185**	
	Brand		**KRLY**	**KRLY**	**KRLY**	**KRLY**	**KRLY**	**KRLY**	**KRLY**

Insert			MRM. 3C	MRM. 4C	MRM. 5C	MRM. 6C	KGM.2C	KGM.3C
Size (mm)			#2020 - 3232	#2020 - 3232	#2525 - 3232	#3232	#1212 - 2525	#2020 - 2525
Item Code			BDRT R/L	BDRT R/L	BDRT R/L	BDRT R/L	BDKT R/L	BDKT R/L
T Max. (mm)			2.8mm	2.8mm	2.8mm	2.8mm	15-18mm	20-22mm
Application Type	**External Grooving**	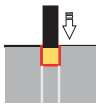	-	-	-	-	✓	✓
	Page							
	Long Ext. Grooving	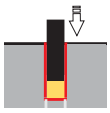	-	-	-	-	-	-
	Page							
	External Turning	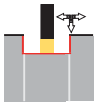	-	-	-	-	✓	✓
	Page							
	Swiss Type	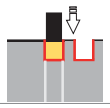	-	-	-	-	✓	-
	Page						**C178**	
	Parting (Blade)	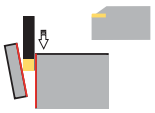	-	-	-	-	-	-
	Page							
	Edge Grooving	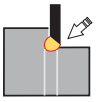	✓	✓	✓	✓	-	-
	Page		**C163**	**C163**	**C163**	**C163**	**C164**	**C164**
	Face Grooving		-	-	-	-	-	-
	Page							
	Brand		**KRLY**	**KRLY**	**KRLY**	**KRLY**	**KRLY**	**KRLY**

Insert			TDP2002	TDP3002	TDP4002	GP2C	GP3C	GP4C	
Size (mm)			#1212 - 2525	#1212 - 2525	#2020 - 2525	#2020 - 2525	#2020 - 2525	#2020 - 2525	
Item Code			BDKT R/L	BDKT R/L	BDKT R/L	BDKT R/L	BDKT R/L	BDKT R/L	
T Max. (mm)			18mm	20-22mm	20-22mm	18mm	20-22mm	20-22mm	
Application Type	**External Grooving**	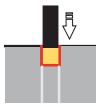	✓	✓	✓	✓	✓	✓	
	Page		**C165**	**C165**	**C165**	**C171**	**C171**	**C171**	
	Long Ext. Grooving	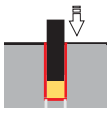	-	-	-				
	Page								
	External Turning	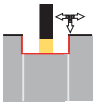	-	-	-	-	-	-	
	Page								
	Swiss Type	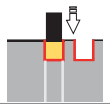	✓	✓	-	-	-	-	
	Page		**C181**	**C181**					
	Parting (Blade)	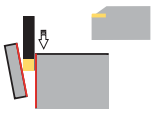	✓	✓	✓	-	✓	✓	
	Page		**C156**	**C156**	**C156**		**C157**	**C157**	
	Edge Grooving	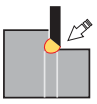	-	-	-	-	-	-	
	Page								
	Face Grooving		-	-	-	-	-	-	
	Page								
	Brand		**YG-1**	**YG-1**	**YG-1**	**PLBT**	**PLBT**	**PLBT**	

Insert			RD. 2C	RD. 3C	RD. 4C			
Size (mm)			26 - 32	26 - 32	26 - 32			
Item Code			BDKT R/L	BDKT R/L	BDKT R/L			
T Max. (mm)			-	-	-			
Application Type	**External Grooving**	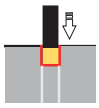	✓	✓	✓			
	Page		**C169**	**C169**	**C169**			
	Long Ext. Grooving	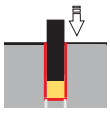	-	-	-			
	Page							
	External Turning	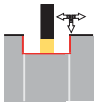	-	-	-			
	Page							
	Swiss Type	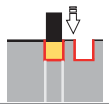	✓	✓	-			
	Page		**C178**	**C178**				
	Parting (Blade)	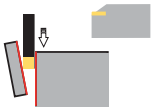	✓	✓	✓			
	Page		**C160**	**C160**	**C160**			
	Edge Grooving	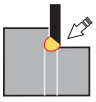	-	-	-			
	Page							
	Face Grooving		-	-	-			
	Page							
	Brand		**TGTC**	**TGTC**	**TGTC**			

Insert			KGM. 4C	KGM. 5C	KGM. 6C	DGN. 2C	DGN. 2.2C	DGN. 3C
Size (mm)			#2020 - 2525	#2525	#2525	#1212 - 2525	#2020 - 2525	#1212 - 3232
Item Code			BDKT R/L	BDKT R/L	BDKT R/L	BDKT R/L	BDKT R/L	BDKT R/L
T Max. (mm)			20-22mm	25mm	20-22mm	15-18mm	18mm	15-25mm
Application Type	**External Grooving**	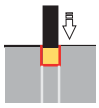	-	-	-	✓	✓	✓
	Page					**C167**	**C167**	**C167**
	Long Ext. Grooving	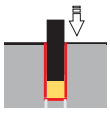	-	-	-	-	-	✓ T40mm
	Page							
	External Turning	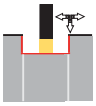	✓	✓	✓	-	-	-
	Page		**C164**	**C164**	**C164**			
	Swiss Type	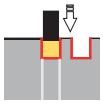	-	-	-	✓	-	✓
	Page					**C178**		**C178**
	Parting (Blade)	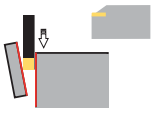	-	-	-	✓	-	✓
	Page					**C158**		**C158**
	Edge Grooving	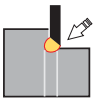	-	-	-	-	-	-
	Page							
	Face Grooving		-	-	-	-	-	-
	Page							
	Brand		**KRLY**	**KRLY**	**KRLY**	**ISC**	**ISC**	**ISC**

Insert			GRIP 3C	GRIP 4C	GRIP 5C	GIM. 3C	TGM 3C	TGM 4C	TDC. 2C
Size (mm)			#1212 - 3232	#2020 - 3232	#3232	#1616 - 2525	#2020 - 2525	#2020 - 2525	#1212 - 2525
Item Code			BDKT R/L	BDKT R/L	BDKT R/L	BDKT R/L	BDKT R/L	BDKT R/L	BDKT R/L
T Max. (mm)			15-22mm	20-40mm	25mm	15-22mm	20-22mm	20-22mm	15-18mm
Application Type	**External Grooving**	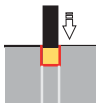	✓	✓	✓	✓	✓	✓	✓
	Page		**C167**	**C167**	**C167**	**C167**	**C167**	**C167**	**C168**
	Long Ext. Grooving	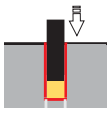	-	✓ T40mm	-	-	-	-	-
	Page			**C167**					
	External Turning	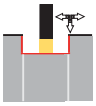	-	-	-	-	✓	✓	-
	Page								
	Swiss Type	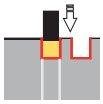	-	-	-	-	-	-	✓
	Page								
	Parting (Blade)	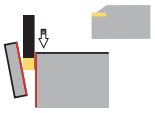	-	✓	-	-	-	-	✓
	Page			**C158**					**C160**
	Edge Grooving	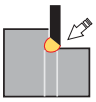	-	-	-	-	-	-	-
	Page								
	Face Grooving		-	✓	-	-	-	-	✓
	Page			**C187**					**C178**
	Brand		**ISC**	**ISC**	**ISC**	**ISC**	**ISC**	**ISC**	**TGTC**

Insert			TDC. 3C	TDC. 4C	GDM. 2C	GDM. 3C	GDM. 4C	ZT.D 2C	ZT.D 3C
Size (mm)			#1212 - 2525	#2020 - 2525	#2020 - 2525	#2020 - 2525	#2020 - 2525	#1616 - 2525	#1616 - 2525
Item Code			BDKT R/L	BDKT R/L	BDKT R/L	BDKT R/L	BDKT R/L	BDKT R/L	BDKT R/L
T Max. (mm)			15-18mm	20-22mm	18mm	20-22mm	20-22mm	18mm	18-20mm
Application Type	**External Grooving**	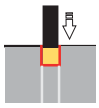	✓	✓	✓	✓	✓	✓	✓
	Page		**C168**	**C168**	**C172**	**C172**	**C172**	**C175**	**C175**
	Long Ext. Grooving	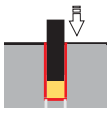	-	-	-	-	-	-	-
	Page								
	External Turning	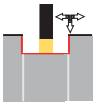	-	-	-	-	-	-	-
	Page								
	Swiss Type	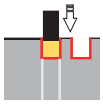	-	-	✓	✓	-	-	-
	Page				**C181**	**C181**			
	Parting (Blade)	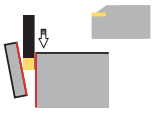	✓	✓	-	-	-	-	✓
	Page		**C160**	**C160**					**C158**
	Edge Grooving	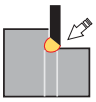	-	-	-	-	-	-	-
	Page								
	Face Grooving		-	-	-	-	-	-	✓
	Page								**C186**
	Brand		**TGTC**	**TGTC**	**KYC**	**KYC**	**KYC**	**ZCC-CT**	**ZCC-CT**

Insert			ZT.D 4C	ZT.D 5C	ZQMX-3C	ZQMX-3C	GCTX 2C	GCTX 3C	123 2C	123 3C
Size (mm)			#2020 - 2525	#2020 - 2525	#2020 - 2525	#2020 - 2525	#1616 - 2525	#1616 - 2525	#1212 - 2525	#1212 - 2525
Item Code			BDKT R/L	BDKT R/L	BDKT R/L	BDKT R/L	BDKT R/L	BDKT R/L	BDKT R/L	BDKT R/L
T Max. (mm)			20-22mm	20-25mm	20-22mm	20-22mm	18mm	18-22mm	15-18mm	15-18mm
Application Type	**External Grooving**	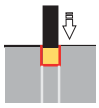	✓	✓	✓	✓	✓	✓	✓	✓
	Page		**C175**	**C175**	**C175**	**C175**	**C169**	**C169**	**C170**	**C170**
	Long Ext. Grooving	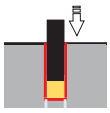	-	-	-	-	-	-	-	-
	Page									
	External Turning	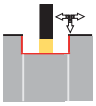	-	-	-	-	-	-	-	-
	Page									
	Swiss Type	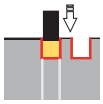	-	-	-	-	-	-	✓	✓
	Page								**C182**	**C182**
	Parting (Blade)	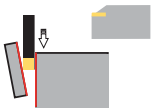	✓	-	-	-	-	-	✓	✓
	Page		**C158**						**C159**	**C159**
	Edge Grooving	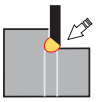	-	-	-	-	-	-	-	-
	Page									
	Face Grooving		✓	-	-	-	-	-	-	-
	Page		**C186**							
			ZCC-CT	**ZCC-CT**	**ZCC-CT**	**ZCC-CT**	**LMN**	**LMN**	**SNDVK**	**SNDVK**

Insert			123 4C	123 5C	151.2 2C	151.2 3C	151.2 4C	151.2 5C
Size (mm)			#2020 - 2525	#2020 - 2525	#1616 - 2525	#1616 - 2525	#1616 - 2525	#2020 - 2525
Item Code			BDKT R/L	BDKT R/L	BDKT R/L	BDKT R/L	BDKT R/L	BDKT R/L
T Max. (mm)			20-22mm	22-25mm	18mm	18-22mm	18-22mm	20-25mm
Application Type	**External Grooving**	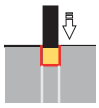	✓	✓	✓	✓	✓	✓
	Page		**C170**	**C170**	**C171**	**C171**	**C171**	**C171**
	Long Ext. Grooving	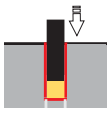	-	-	-	-	-	-
	Page							
	External Turning	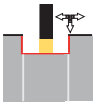	-	-	✓	✓	✓	✓
	Page				**C171**	**C171**	**C171**	**C171**
	Swiss Type	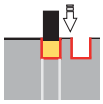	-	-	✓	✓	-	-
	Page				**C182**	**C182**		
	Parting (Blade)	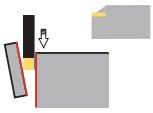	✓	-	✓	✓	✓	-
	Page		**C159**		**C159**	**C159**	**C159**	
	Edge Grooving	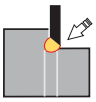	-	-	-	-	-	-
	Page							
	Face Grooving		-	-	-	-	-	-
	Page							
	Brand		**SNDVK**	**SNDVK**	**SNDVK**	**SNDVK**	**SNDVK**	**SNDVK**

Insert			GX16 2C	GX16 3C	GX24 2C	GX24 3C	GX24 4C
Size (mm)			#2020 - 2525	#2020 - 2525	#2020 - 2525	#2020 - 2525	#2525
Item Code			BDKT R/L	BDKT R/L	BDKT R/L	BDKT R/L	BDKT R/L
T Max. (mm)			18mm	20-22mm	18mm	20-22mm	22mm
Application Type	**External Grooving**	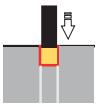	✓	✓	✓	✓	✓
	Page		**C171**	**C171**	**C171**	**C171**	**C171**
	Long Ext. Grooving	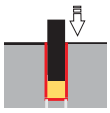	-	-	-	-	-
	Page						
	External Turning	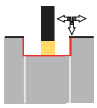	-	-	-	-	-
	Page						
	Swiss Type	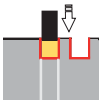	-	-	-	-	-
	Page						
	Parting (Blade)	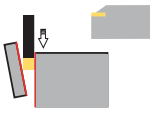	-	-	-	-	-
	Page						
	Edge Grooving	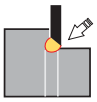	-	-	-	-	-
	Page						
	Face Grooving		-	-	-	-	-
	Page						
	Brand		**WLTR**	**WLTR**	**WLTR**	**WLTR**	**WLTR**

Insert			GCM 2C	GCM 3C	GCM 4C	S229 3C	S229 4C	S229 5C
Size (mm)			#1212 - 2525	#1212 - 2525	#2020 - 2525	#2020 - 2525	#2020 - 2525	#2020 - 2525
Item Code			BDKT R/L	BDKT R/L	BDKT R/L	BDKT R/L	BDKT R/L	BDKT R/L
T Max. (mm)			15-18mm	15-25mm	20-25mm	20-22mm	20-22mm	20-25mm
Application Type	**External Grooving**	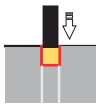	✓	✓	✓	✓	✓	✓
	Page		**C173**	**C173**	**C173**	**C176**	**C176**	**C176**
	Long Ext. Grooving	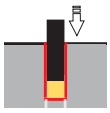	-	-	-	-	-	-
	Page							
	External Turning	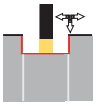	-	-	-	-	-	-
	Page							
	Swiss Type	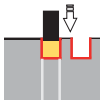	-	-	-	-	-	-
	Page							
	Parting (Blade)	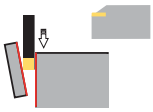	✓	✓	✓	-	-	-
	Page		**C157**	**C157**	**C157**			
	Edge Grooving	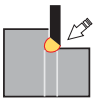	-	-	-	-	-	-
	Page							
	Face Grooving		-	-	-	-	-	-
	Page							
	Brand		**SMTM**	**SMTM**	**SMTM**	**HRN**	**HRN**	**HRN**

Insert			S224 2C	S229 3C	S229 4C	S229 5C	DGM / DTX 2C	DGM / DTX 3C
Size (mm)			#2020 - 2525	#2020 - 2525	#2020 - 2525	#2020 - 2525	#2020 - 2525	#2020 - 2525
Item Code			BDKT R/L	BDKT R/L	BDKT R/L	BDKT R/L	BDKT R/L	BDKT R/L
T Max. (mm)			18mm	20-22mm	20-22mm	20-22mm	18mm	20-22mm
Application Type	**External Grooving**	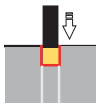	✓	✓	✓	✓	✓ DTM	✓ DTM
	Page		**C176**	**C176**	**C176**	**C176**	**C174**	**C174**
	Long Ext. Grooving	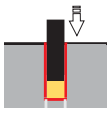	-	-	-	-	-	-
	Page							
	External Turning	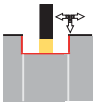	-	-	-	-	✓ DTX	✓ DTX
	Page							
	Swiss Type	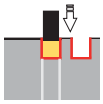	-	-	-	-	-	-
	Page						**C178**	**C178**
	Parting (Blade)	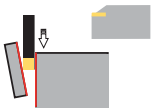	-	-	-	-	✓	✓
	Page						**C156**	**C156**
	Edge Grooving	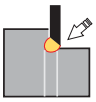	-	-	-	-	-	-
	Page							
	Face Grooving		-	-	-	-	-	-
	Page							
	Brand		**HRN**	**HRN**	**HRN**	**HRN**	**TNGLY**	**TNGLY**

Insert			DGM / DTX 4C	A4 - 2C	A4 - 3C	A4 - 4C	GL2-2C	GL2-3C	GL2-4C
Size (mm)			#2020 - 2525	#2020 - 2525	#2020 - 2525	#2020 - 2525	#2020 - 2525	#2020 - 2525	#2020 - 2525
Item Code			BDKT R/L	BDKT R/L	BDKT R/L	BDKT R/L	BDKT R/L	BDKT R/L	BDKT R/L
T Max. (mm)			20-22mm	18mm	20-22mm	20-22mm	18mm	20-22mm	20-22mm
Application Type	**External Grooving**	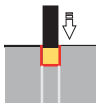	✓ DTM	✓	✓	✓	✓	✓	✓
	Page		**C174**	**C177**	**C177**	**C177**	**C177**	**C177**	**C177**
	Long Ext. Grooving	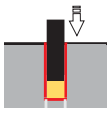	-	-	-	-	-	-	-
	Page								
	External Turning	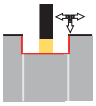	✓ DTX	-	-	-			
	Page								
	Swiss Type	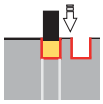	-	-	-	-	-	-	-
	Page								
	Parting (Blade)	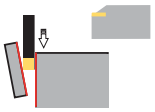	-	-	-	-	-	-	-
	Page								
	Edge Grooving	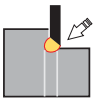	-	-	-	-	-	-	-
	Page								
	Face Grooving		-	-	-	-	-	-	-
	Page								
	Brand		**TNGLY**	**KNMTL**	**KNMTL**	**KNMTL**	**PRMT**	**PRMT**	**PRMT**

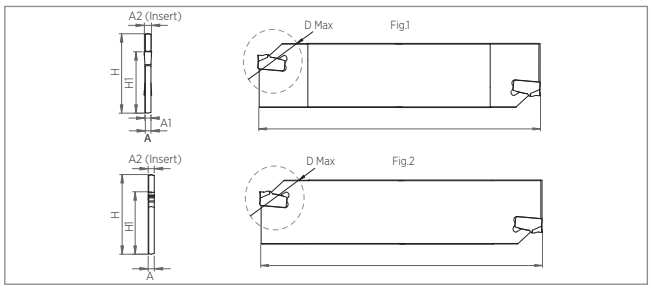

Ordering Code	Item Designation	Dimensions (mm)								Master Insert*
	SML-Blade SP	H	H1	A	A1	A2 (Insert)	L	D max	Fig.	
SM66977	SML 26 SP 2C	26	21.4	1.6	-	1.75-2	110	39	1	SP200
SM66953	SML 32 SP 2C	32	25	2.4	1.8	1.75-2	150	39	1	
SM66984	SML 26 SP 3C	26	21.4	2.4	-	2.7-3	110	39	2	SP300
SM66946	SML 32 SP 3C	32	25	2.4	-	2.7-3	150	39	2	
SM66991	SML 26 SP 4C	26	21.4	3.2	-	4	110	80	2	SP400
SM66960	SML 32 SP 4C	32	25	3.2	-	4	150	100	2	

Descriptions	Master Insert*	Spare Parts
		Blade Key
26 - 32	SP (2C-4C)	SBK-01-9901

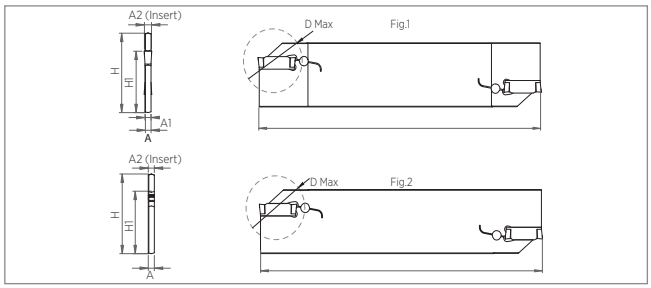

Ordering Code	Item Designation	Dimensions (mm)								Master Insert**
	SML-Blade MGM.	H	H1	A	A1	A2 (Insert)	L	D max	Fig.	
SM68506	SML 26 K2C	26	21.4	1.6	-	2.4-2	110	39	1	MGM. 2C
SM62320	SML 32 K2C	32	25	2.4	1.8	2.4-2	150	39	1	
SM68513	SML 26 K3C	26	21.4	2.4	-	2.4-3	110	39	2	MGM. 3C
SM62337	SML 32 K3C	32	25	2.4	-	2.4-3	150	39	2	
SM68520	SML 26 K4C	26	21.4	3.2	-	4	110	80	2	MGM. 4C
SM62344	SML 32 K4C	32	25	3.2	-	4	150	100	2	

Descriptions	Master Insert**	Spare Parts
		Blade Key
26 - 32	MGM. (2C-4C)	SBK-01-9901

*Suitable Insert brand is KRLY

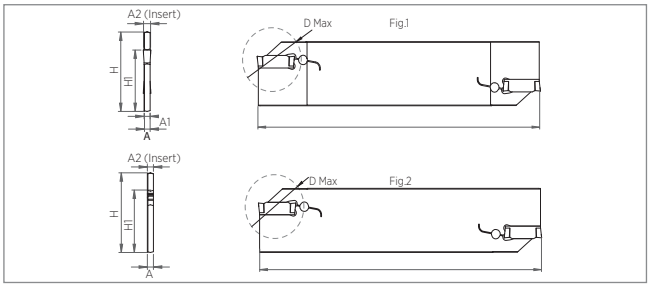

Ordering Code	Item Designation	Dimensions (mm)								Master Insert*
	SML-Blade DGM/DTX	H	H1	A	A1	A2 (Insert)	L	D max	Fig.	
SM68551	SML 32 DG3C	32	25	2.4	-	2.25-3	150	39	2	DGM/DTX 3C
SM68568	SML 32 DG4C	32	25	3.2	-	4	150	100	2	DGM/DTX 4C

Descriptions	Master Insert*	Spare Parts
		Blade Key
32	DGM/DTX (3C-4C)	SBK-01-9901

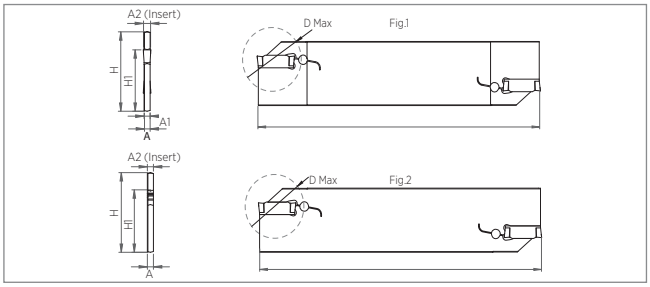

Ordering Code	Item Designation	Dimensions (mm)								Master Insert*
	SML-Blade TDP	H	H1	A	A1	A2 (Insert)	L	D max	Fig.	
SM66755	SML 26 YG2C	26	21.4	1.6	-	1.7-2	110	39	2	TDP2002
SM66762	SML 32 YG2C	32	25	2.4	1.8	1.7-2	150	39	1	
SM66779	SML 26 YG3C	26	21.4	2.4	-	2.15-3	110	39	2	TDP3002
SM66786	SML 32 YG3C	32	25	2.4	-	2.15-3	150	39	2	
SM66793	SML 26 YG4C	26	21.4	3.2	-	4	110	80	2	TDP4002
SM66809	SML 32 YG4C	32	25	3.2	-	4	150	100	2	

Descriptions	Master Insert*	Spare Parts
		Blade Key
26 - 32	TDP (2C-4C)	SBK-01-9901

*Suitable Insert brand is TNGLY
**Suitable Insert brand is YG-1

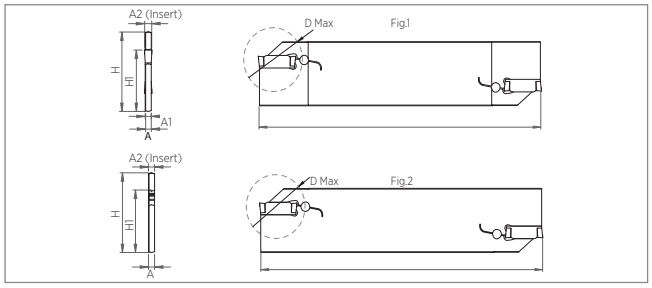

Ordering Code	Item Designation	Dimensions (mm)								Master Insert*
	SML-Blade GP	H	H1	A	A1	A2 (Insert)	L	D max	Fig.	
SM68391	SML 32 GP3C	32	25	2.4	-	2.2-3	150	39	2	GP3C
SM68407	SML 32 GP4C	32	25	3.2	-	3.2-4	150	100	2	GP4C

Descriptions	Master Insert*	Spare Parts
		Blade Key
32	GP (3C-4C)	SBK-01-9901

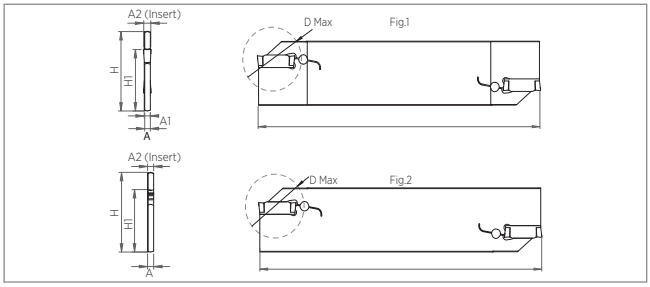

Ordering Code	Item Designation	Dimensions (mm)								Master Insert**
	SML-Blade GCM	H	H1	A	A1	A2 (Insert)	L	D max	Fig.	
SM68476	SML 32 GCM2C	32	25	2.4	1.8	1.55-2	150	39	1	GCM-2C
SM68483	SML 32 GCM3C	32	25	2.4	-	2.15-3	150	39	2	GCM-3C
SM68490	SML 32 GCM4C	32	25	3.2	-	4	150	100	2	GCM-4C

Descriptions	Master Insert**	Spare Parts
		Blade Key
26 - 32	GCM (2C-4C)	SBK-01-9901

*Suitable Insert brand is PLBT
**Suitable Insert brand is SMTM

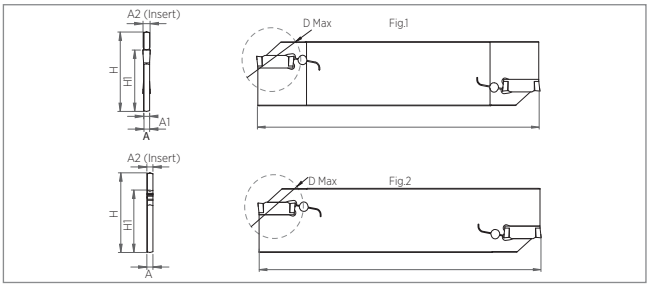

Ordering Code	Item Designation	Dimensions (mm)								Master Insert*
	SML-Blade DGN / GRIP	H	H1	A	A1	A2 (Insert)	L	D max	Fig.	
SM54714	SML 26 ID2C	26	21.4	1.6	-	1.9-2.5	110	39	1	DGN. 2C
SM54721	SML 32 ID2C	32	25	2.4	1.8	1.9-2.5	150	39	1	
SM54738	SML 26 ID3C	26	21.4	2.4	-	3-3.18	110	39	2	DGN. 3C
SM54745	SML 32 ID3C	32	25	2.4	-	3-3.18	150	39	2	
SM54752	SML 26 IG4C	26	21.4	3.2	-	4	110	80	2	GRIP 4C
SM54769	SML 32 IG4C	32	25	3.2	-	4	150	100	2	

Descriptions	Master Insert*	Spare Parts
		Blade Key
26 - 32	DGN / GRIP (2C-4C)	SBK-01-9901

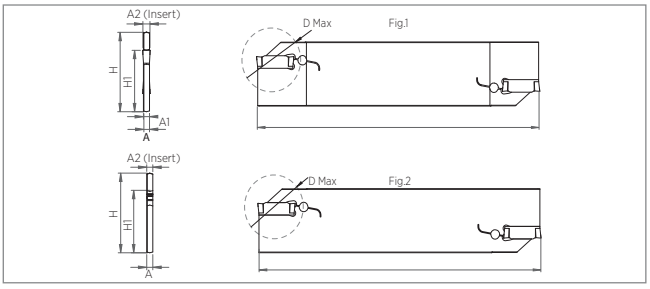

Ordering Code	Item Designation	Dimensions (mm)								Master Insert**
	SML-Blade ZT..	H	H1	A	A1	A2 (Insert)	L	D max	Fig.	
SM61453	SML 26 ZT3C	26	21.4	1.6	-	3	110	39	2	ZTFD 3C
SM54851	SML 32 ZT3C	32	25	2.4	-	3	150	39	2	
SM61460	SML 26 ZT4C	26	21.4	3.2	-	4	110	80	2	ZTGD 4C
SM54868	SML 32 ZT4C	32	25	2.4	-	4	150	39	2	

Descriptions	Master Insert**	Spare Parts
		Blade Key
26 - 32	ZT.. (3C - 4C)	SBK-01-9901

*Suitable Insert brand is ISC
**Suitable Insert brand is ZCC-CT

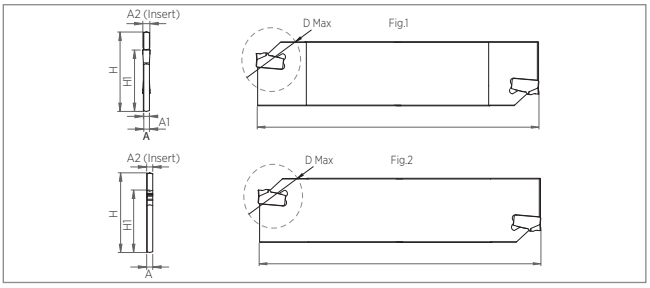

Ordering Code	Item Designation	Dimensions (mm)								Master Insert*
	SML-Blade 151.2	H	H1	A	A1	A2 (Insert)	L	D max	Fig.	
SM68537	SML 26 151.2-2C	26	21.4	1.6	-	1.7-2	110	39	1	151.2-2C
SM68544	SML 32 151.2-2C	32	25	2.4	1.8	1.7-2	150	39	1	
SM61538	SML 26 151.2-3C	26	21.4	2.4	-	2.5-3	110	39	2	151.2-3C
SM54806	SML 32 151.2-3C	32	25	2.4	-	3	150	-	2	
SM61545	SML 26 151.2-4C	26	21.4	3.2	-	4	110	80	2	151.2-4C
SM54813	SML 32 151.2-4C	32	25	2.4	-	4	150	-	2	

Descriptions	Master Insert*	Spare Parts
		Blade Key
26-32	151.2 (2C- 4C)	SBK-01-9901

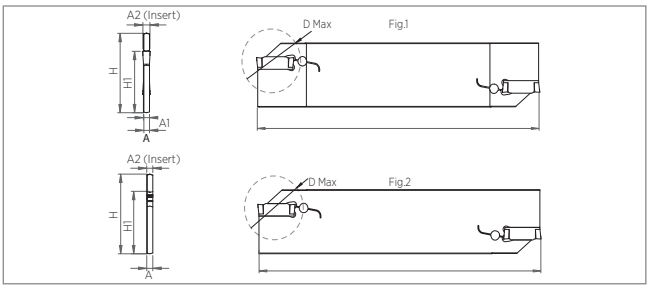

Ordering Code	Item Designation	Dimensions (mm)								Master Insert*
	SML-Blade 123	H	H1	A	A1	A2 (Insert)	L	D max	Fig.	
SM61507	SML 26 123-2C	26	21.4	1.6	-	1.9-2.5	110	39	1	123-2C
SM54776	SML 32 123-2C	32	25	2.4	1.6	2	150	39	1	
SM61514	SML 26 123-3C	26	21.4	2.4	-	3-3.18	110	39	2	123-3C
SM54783	SML 32 123-3C	32	25	2.4	-	3	150	39	2	
SM61521	SML 26 123-4C	26	21.4	3.2	-	4	110	80	2	123-4C
SM54790	SML 32 123-4C	32	25	3.2	-	4	150	39	2	

Descriptions	Master Insert*	Spare Parts
		Blade Key
32	123 (2C- 4C)	SBK-01-9901

*Suitable Insert brand is SNDVK

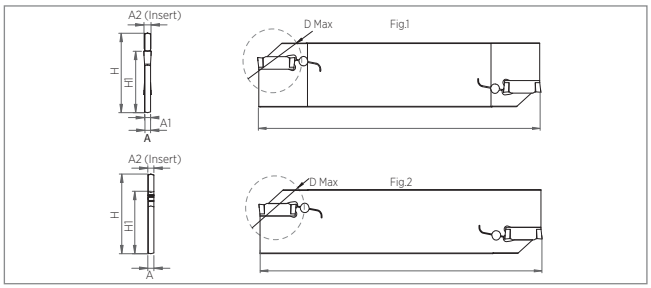

Ordering Code	Item Designation	Dimensions (mm)								Master Insert**
	SML-Blade TDC	H	H1	A	A1	A2 (Insert)	L	D max	Fig.	
SM61477	SML 26 TDC2C	26	21.4	1.6	-	1.9-2.5	110	39	1	TDC. 2C
SM54820	SML 32 TDC2C	32	25	2.4	1.6	2	150	39	1	
SM61484	SML 26 TDC3C	26	21.4	2.4	-	3-3.18	110	39	2	TDC. 3C
SM54837	SML 32 TDC3C	32	25	2.4	-	3	150	39	2	
SM61491	SML 26 TDC4C	26	21.4	3.2	-	4	110	80	2	TDC. 4C
SM54844	SML 32 TDC4C	32	25	2.4	-	4	150	39	2	

Descriptions	Master Insert**	Spare Parts
		Blade Key
26-32	TDC (2C- 4C)	SBK-01-9901

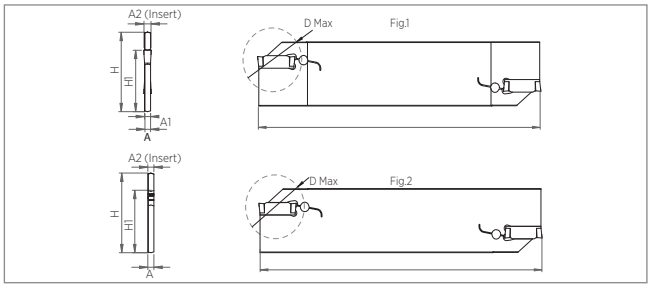

Ordering Code	Item Designation	Dimensions (mm)								Master Insert*
	SML-Blade RD	H	H1	A	A1	A2 (Insert)	L	D max	Fig.	
SM68414	SML 26 RD2C	26	21.4	1.6	-	1.7-2	110	39	2	RD. 2C
SM68421	SML 32 RD2C	32	25	2.4	1.8	1.7-2	150	39	1	
SM68438	SML 26 RD3C	26	21.4	2.4	-	2.4-3	110	39	2	RD. 3C
SM68445	SML 32 RD3C	32	25	2.4	-	2.4-3	150	39	2	
SM68452	SML 26 RD4C	26	21.4	3.2	-	4	110	80	2	RD. 4C
SM68469	SML 32 RD4C	32	25	3.2	-	4	150	100	2	

Descriptions	Master Insert*	Spare Parts
		Blade Key
32	TDC (2C- 4C)	SBK-01-9901

*Suitable Insert brand is TGTC

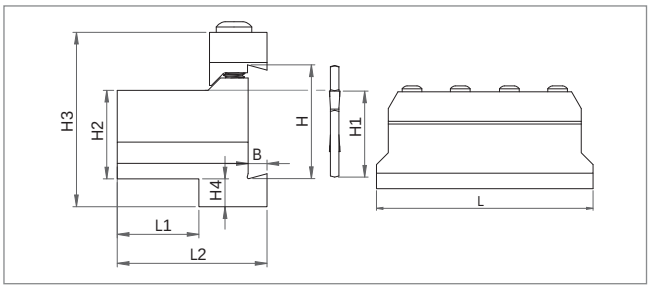

Ordering Code	Item Designation	Dimensions (mm)								
	SMLK-Blade Holder	H	H1	H2	H3	H4	L	L1	L2	B
SM54875	SMLK 20-26	26	21.4	20	43	9	86	21	38	4.1
SM54882	SMLK 20-32	32	25	20	50	13	100	19	38	5.3
SM54899	SMLK 25-26	26	21.4	25	45	5	110	25	42	4.1
SM54905	SMLK 25-32	32	25	25	50	7.8	110	23	42	5.3
SM54912	SMLK 32-32	32	25	32	54	5	110	29	48	5.3

Ordering Code	*Blade Clamp*	*Descriptions*	Clapm Screw	Allen Key
	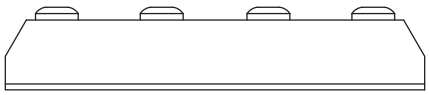			
SM54929	SMK1-075	SMLK 20-26	BKTV-M6x28-9240	AA5
SM54936	SMK2-090	SMLK 20-32	BKTV-M6x35-9241	
SM54943	SMK3-100	SMLK 32-32		

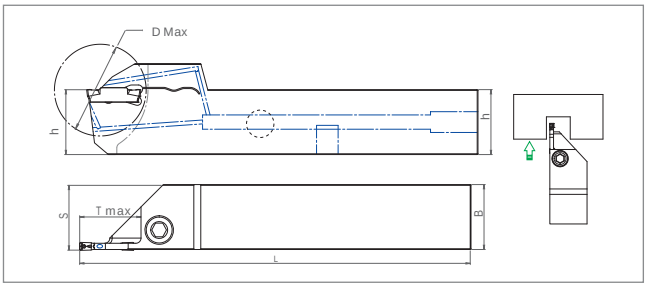

Ordering Code		Item Designation	Dimensions (mm)							Master Insert*
Direction		*BDKT R/L-MGM*		*h*	*B*	*L*	*S*	*t Max*	*D Max*	
Right	*Left*									
SM56183	SM56190	BDKT R/L 2525 K3C T22 JC	✓	25	25	150	25.4	22	44	MGM. 3C
SM56206	SM56213	BDKT R/L 2525 K4C T22 JC	✓	25	25	150	25.4	22	44	MGM. 4C

Cooling accessories are optional / See Page "529" for cooling accessory.
Soğutma ekipmanları opsiyoneldir / Bkz. Sayfa "529" Soğutma aksesuarları için

Descriptions	Master Insert*	Spare Parts		
		Screw	*Allen Key*	*Plug*
2525	MGM (3C - 4C)	BKTV M8x1x25-9232	SAK-AA4-9903	-
2525-JC				SMHT G1/8-AA4 9260

EXTERNAL GROOVING TOOLS

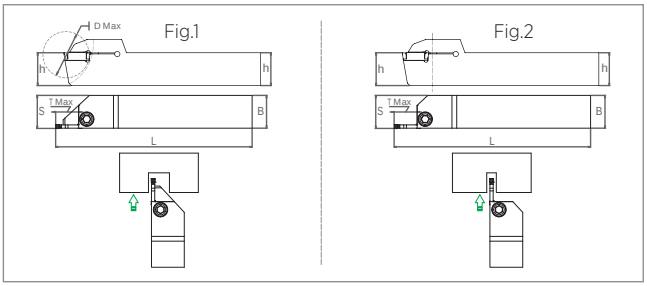

Ordering Code		Item Designation	Dimensions (mm)							Master Insert*
Direction		BDKT R/L-MGM	Fig.	h	B	L	S	t Max	D Max	
Right	Left									
SM09493	SM09691	BDKT R/L 1212 K2C T15	1	12	12	100	12.3	15	30	MGM. 2C
SM09479	SM09660	BDKT R/L 1616 K2C T18	1	16	16	125	16.3	18	36	
SM62658	**SM62665**	**BDKT R/L 1616 K2C T12**	**1**	**16**	**16**	**125**	**16.2**	**12**	**24**	
SM63495	**SM63471**	**BDKT R/L 1616 K2C T21**	**1**	**16**	**16**	**125**	**16.2**	**21**	**42**	
SM09455	SM09653	BDKT R/L 2020 K2C T18	1	20	20	125	20.3	18	36	
SM27411	SM38851	BDKT R/L 2020 K2C T12	1	20	20	125	20.3	12	24	
SM09462	SM09677	BDKT R/L 2525 K2C T18	1	25	25	150	25.3	18	36	
SM09486	SM09684	BDKT R/L 3232 K2C T18	1	32	32	170	32.3	18	36	
SM47747	SM47754	BDKT R/L 2020 K2.5C T18	1	20	20	125	20.4	18	36	MGM. 2.5C
SM47761	SM47778	BDKT R/L 2525 K2.5C T18	1	25	25	150	25.4	18	36	
SM09547	SM09745	BDKT R/L 1212 K3C T18	1	12	12	100	12.3	18	36	MGM. 3C
SM09523	SM09714	BDKT R/L 1616 K3C T18	1	16	16	125	16.4	18	36	
SM09509	SM09707	BDKT R/L 2020 K3C T20	1	20	20	125	20.4	20	40	
SM57258	SM57265	BDKT R/L 2020 K3C T T20	2	20	20	125	20.4	20	40	
SM09516	SM09721	BDKT R/L 2525 K3C T22	1	25	25	150	25.4	22	44	
SM57173	SM57180	BDKT R/L 2525 K3C T T22	2	25	25	150	25.4	22	44	
SM24601	SM25141	BDKT R/L 2525 K3C T25	1	25	25	150	25.4	25	50	
SM57197	SM57203	BDKT R/L 2525 K3C T T25	2	25	25	150	25.4	25	50	
SM24625	SM25134	BDKT R/L 2525 K3C T40	1	25	25	170	25.4	40	80	
SM09530	SM09738	BDKT R/L 3232 K3C T22	1	32	32	170	32.4	22	44	
SM09554	SM09752	BDKT R/L 2020 K4C T20	1	20	20	125	20.4	20	40	MGM. 4C
SM57272	SM57289	BDKT R/L 2020 K4C T T20	2	20	20	125	20.4	20	40	
SM27428	SM38844	BDKT R/L 2020 K4C T25	1	20	20	125	20.4	25	50	
SM09561	SM09769	BDKT R/L 2525 K4C T22	1	25	25	150	25.4	22	44	
SM57210	SM57227	BDKT R/L 2525 K4C T T22	2	25	25	150	25.4	22	44	
SM24618	SM25127	BDKT R/L 2525 K4C T25	1	25	25	150	25.4	25	50	
SM57234	SM57241	BDKT R/L 2525 K4C T T25	2	25	25	150	25.4	25	50	
SM24687	SM25110	BDKT R/L 2525 K4C T40	1	25	25	170	25.4	40	80	
SM09578	SM09776	BDKT R/L 3232 K4C T22	1	32	32	170	32.4	22	44	
SM09585	SM09783	BDKT R/L 2020 K5C T20	1	20	20	125	20.5	20	40	MGM. 5C
SM09592	SM09790	BDKT R/L 2525 K5C T25	1	25	25	150	25.5	25	50	
SM37830	SM37847	BDKT R/L 2525 K5C T40	1	25	25	170	25.5	40	80	
SM61811	**SM67790**	**BDKT R/L 3232 K5C T T25**	**1**	**32**	**32**	**170**	**32.6**	**25**	**50**	
SM09608	SM09806	BDKT R/L 3232 K5C T25	1	32	32	170	32.5	25	50	
SM09615	SM09813	BDKT R/L 2525 K6C T25	1	25	25	150	25.6	25	50	MGM. 6C
SM09622	SM09820	BDKT R/L 3232 K6C T25	1	32	32	170	32.6	25	50	
SM09646	SM09837	BDKT R/L 2525 K8C T25	1	25	25	150	25.6	25	50	MGM. 8C
SM09639	SM09844	BDKT R/L 3232 K8C T27	1	32	32	170	32.8	27	54	

Descriptions	Master Insert*	Spare Parts	
		Screw	Allen Key
1212	MGM (2C - 3C)	BKTV M5x17-9211	SAK-AA4-9903
1616		BKTV M6x25-9215	
2020 - 3232	MGM (2C - 2.5C)	BKTV M6x25-9215	
2020 - 3232	MGM (3C - 8C)	BKTV M8x1x25-9232	

*Suitable Insert brand is KRLY

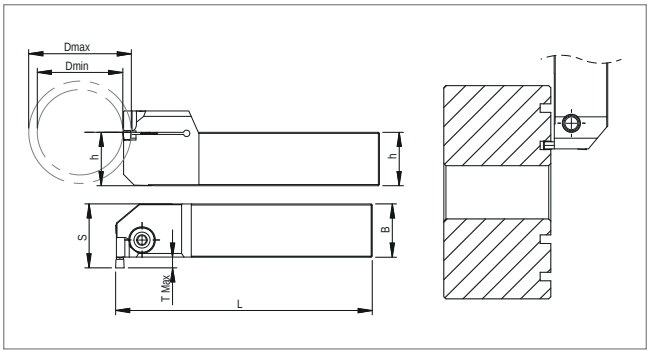

Ordering Code		Item Designation	Dimensions (mm)						Master Insert*
Direction		BDLT R/L-MGM	h	B	L	S	t Max	D Min	
Right	Left								
SM79649	SM79687	BDLT R/L 2020 K3C T5	20	20	125	26	5	135	MGM.. 3C
SM79656	SM79694	BDLT R/L 2525 K3C T5	25	25	150	31	5	135	
SM79663	SM79700	BDLT R/L 2020 K4C T5	20	20	125	26	5	85	MGM.. 4C
SM79670	SM79717	BDLT R/L 2525 K4C T5	25	25	150	31	5	85	

Descriptions	Master Insert*	Spare Parts	
		Screw	Allen Key
2020 - 2525	MGM (3C - 4C)	BKTV M8x1x25-9232	SAK-AA4-9903

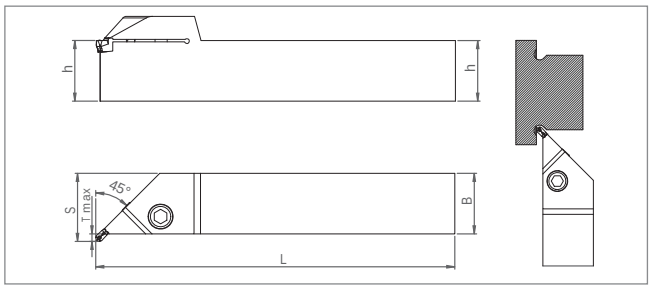

Ordering Code		Item Designation	Dimensions (mm)					Master Insert*
Direction		BDRT R/L-MRMN (45)	h	B	L	S	t Max	
Right	Left							
SM47785	SM47792	BDRT R/L 2020 KR3C T2.8	20	20	125	23	2.8	MR.. 3C
SM47808	SM47815	BDRT R/L 2525 KR3C T2.8	25	25	150	28	2.8	
SM47822	SM47839	BDRT R/L 3232 KR3C T2.8	32	32	170	32.4	2.8	
SM47846	SM47853	BDRT R/L 2020 KR4C T2.8	20	20	125	23	2.8	MR.. 4C
SM47860	SM47877	BDRT R/L 2525 KR4C T2.8	25	25	150	28	2.8	
SM47884	SM47891	BDRT R/L 3232 KR4C T2.8	32	32	170	32.4	2.8	
SM47907	SM47914	BDRT R/L 2525 KR5C T2.8	25	25	150	28	2.8	MR.. 5C
SM47921	SM47938	BDRT R/L 3232 KR5C T2.8	32	32	170	32.4	2.8	
SM47952	SM47945	BDRT R/L 3232 KR6C T2.8	32	32	170	32.4	2.8	MR.. 6C

Descriptions	Master Insert*	Spare Parts	
		Screw	Allen Key
2020 - 3232	MRMN (3C - 6C)	BKTV M8x1x25-9232	SAK-AA4-9903

*Suitable Insert brand is KRLY

EXTERNAL GROOVING TOOLS

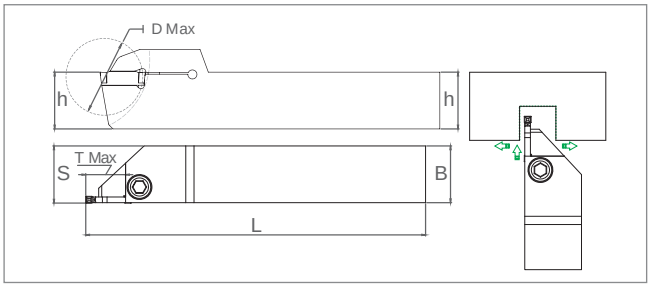

Ordering Code		Item Designation	Dimensions (mm)						Master Insert*
Direction		BDKT R/L-KGM	h	B	L	S	t Max	D Max	
Right	Left								
SM24656	SM24649	BDKT R/L 1212 KG2C T15	12	12	100	12.3	15	30	KGM.. 2C
SM25011	SM25059	BDKT R/L 1616 KG2C T18	16	16	125	16.3	18	36	
SM25004	SM25042	BDKT R/L 2020 KG2C T18	20	20	125	20.2	18	36	
SM24403	SM25097	BDKT R/L 2525 KG2C T18	25	25	150	25.2	18	36	
SM24991	SM25035	BDKT R/L 2020 KG3C T20	20	20	125	20.2	20	40	KGM.. 3C
SM24410	SM25080	BDKT R/L 2525 KG3C T22	25	25	150	25.2	22	44	
SM24984	SM25028	BDKT R/L 2020 KG4C T20	20	20	125	20.2	20	40	KGM.. 4C
SM24427	SM25073	BDKT R/L 2525 KG4C T22	25	25	150	25.2	22	44	
SM24434	SM25066	BDKT R/L 2525 KG5C T25	25	25	150	25.2	25	50	KGM.. 5C
SM24632	SM25103	BDKT R/L 2525 KG6C T25	25	25	150	25.2	25	50	KGM.. 6C

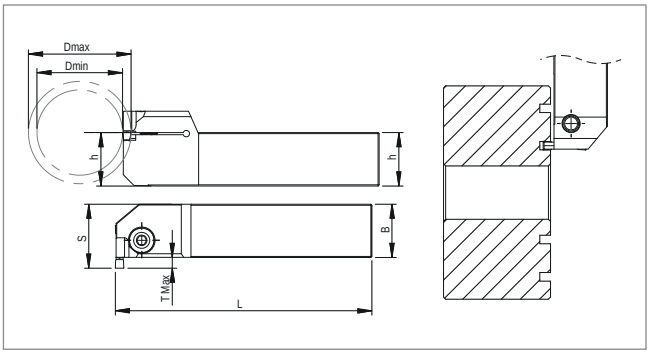

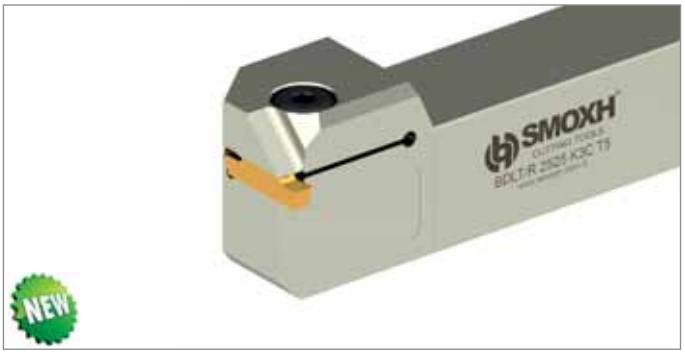

Ordering Code		Item Designation	Dimensions (mm)						Master Insert*
Direction		**BDLT** R/L-KGM	h	B	L	S	t Max	D Min	
Right	Left								
SM79571	SM79588	BDLT R/L 2020 KG3C T5	20	20	125	26	5	65	KGM.. 3C
SM79595	SM79601	BDLT R/L 2525 KG3C T5	25	25	150	31	5	65	
SM79618	SM79625	BDLT R/L 2020 KG4C T5	20	20	125	26	5	65	KGM.. 4C
SM79120	SM79649	BDLT R/L 2525 KG4C T5	25	25	150	31	5	65	

Descriptions	Master Insert*	Spare Parts	
		Screw	Allen Key
1212	KGM (2C)	BKTV M5x17-9211	SAK-AA4-9903
1616	KGM (3C)	BKTV M6x25-9215	
2020 - 2525	KGM (2C)	BKTV M6x25-9215	
2020 - 2525	KGM (3C - 6C)	BKTV M8x1x25-9232	

*Suitable Insert brand is KRLY

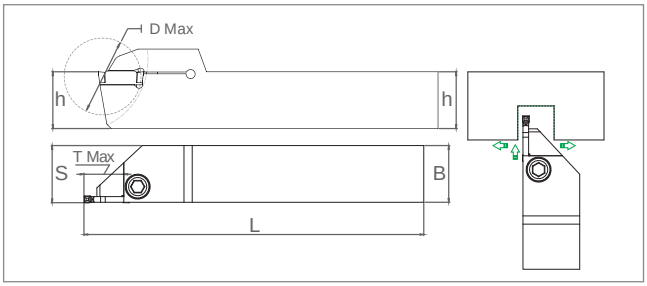

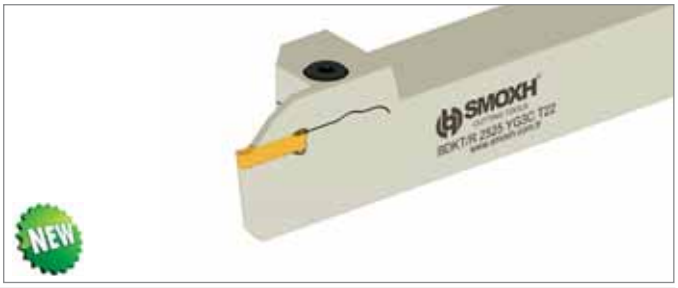

Ordering Code		Item Designation	Dimensions (mm)					Master Insert*	Master Insert*
Direction		*BDKT R/L-TDP*	*h*	*B*	*L*	*S*	*t Max*	*D Max*	
Right	*Left*								
SM66632	SM66649	BDKT R/L 2020 YG2C T18	20	20	125	20.4	18	36	TDP2002
SM66694	SM66700	BDKT R/L 2525 YG2C T18	25	25	150	25.4	18	36	
SM66656	SM66663	BDKT R/L 2020 YG3C T20	20	20	125	20.4	20	40	TDP3002
SM66717	SM66724	BDKT R/L 2525 YG3C T22	25	25	150	25.4	22	44	
SM66670	SM66687	BDKT R/L 2020 YG4C T20	20	20	125	20.4	20	40	TDP4002
SM66731	SM66748	BDKT R/L 2525 YG4C T22	25	25	150	25.4	22	44	

Descriptions	Master Insert*	Spare Parts	
		Screw	*Allen Key*
2020 - 2525	TDP (2C)	BKTV M6x25-9215	SAK-AA4-9903
	TDP (3C - 4C)	BKTV M8x1x25-9232	

*Suitable Insert brand is YG-1
**Suitable Insert brand is MTSBSH

EXTERNAL GROOVING TOOLS

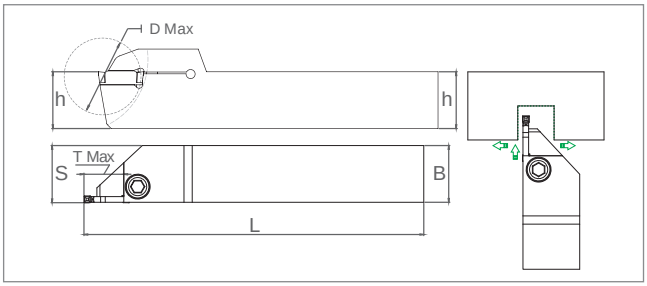

Ordering Code		Item Designation	Dimensions (mm)					Master Insert*	Master Insert*
Direction		BDKT R/L-GY2	h	B	L	S	t Max	D Max	
Right	Left								
SM67431	SM67493	BDKT R/L 2020 GY2 2C T18	20	20	125	20.4	18	36	GY2-2C
SM67448	SM67509	BDKT R/L 2525 GY2 2C T18	25	25	150	25.4	18	36	
SM67455	SM67516	BDKT R/L 2020 GY2 3C T20	20	20	125	20.4	20	40	GY2-3C
SM67462	SM67523	BDKT R/L 2525 GY2 3C T22	25	25	150	25.4	22	44	
SM67479	SM67530	BDKT R/L 2020 GY2 4C T20	20	20	125	20.4	20	40	GY2-4C
SM67486	SM67547	BDKT R/L 2525 GY2 4C T22	25	25	150	25.4	22	44	

Descriptions	Master Insert*	Spare Parts	
		Screw	Allen Key
2020 - 2525	GY2 (2C)	BKTV M6x25-9215	SAK-AA4-9903
	GY2 (3C - 4C)	BKTV M8x1x25-9232	

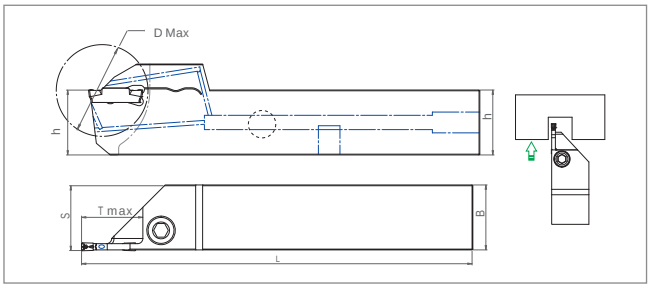

Ordering Code		Item Designation	Dimensions (mm)							Master Insert**
Direction		BDKT R/L DGN / GRIP		h	B	L	S	t Max	D Max	
Right	Left									
SM56220	SM56237	BDKT R/L 2525 ID3C T22 JC	✓	25	25	150	25.3	22	44	DGN. 3C
SM56244	SM56251	BDKT R/L 2525 IG4C T22 JC	✓	25	25	150	25.4	22	44	GRIP 4C

Cooling accessories are optional / See Page "529" for cooling accessory.
Soğutma ekipmanları opsiyoneldir / Bkz. Sayfa "529" Soğutma aksesuarları için

Descriptions	Master Insert**	Spare Parts		
		Screw	Allen Key	Plug
2525	DGN / GRIP (3C - 4C)	BKTV M8x1x25-9232	SAK-AA4-9903	-
2525-JC				SMHT G1/8-AA4 9260

*Suitable Insert brand is MTSBSH
*Suitable Insert brand is ISC

EXTERNAL GROOVING TOOLS

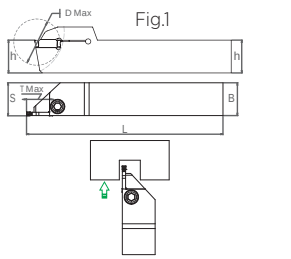

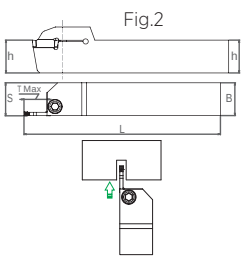

Ordering Code		Item Designation	Dimensions (mm)							Master Insert*
Direction		*BDKT R/L DGN / GRIP / GIM / TGM*	*Fig.*	*h*	*B*	*L*	*S*	*t Max*	*D Max*	
Right	*Left*									
SM09066	SM09196	BDKT R/L 1212 ID2C T15	1	12	12	100	12.3	15	30	DGN. 2C
SM09059	SM09172	BDKT R/L 1616 ID2C T18	1	16	16	125	16.3	18	36	
SM09035	SM09189	BDKT R/L 2020 ID2C T18	1	20	20	125	20.3	18	36	
SM09042	SM09202	BDKT R/L 2525 ID2C T18	1	25	25	150	25.3	18	36	
SM47969	SM47976	BDKT R/L 2020 ID2.2C T18	1	20	20	125	20.3	18	36	DGN. 2.2C
SM27787	SM52024	BDKT R/L 2525 ID2.2C T18	1	25	25	150	25.3	18	36	
SM09103	SM09233	BDKT R/L 1212 ID3C T15	1	12	12	100	12.3	15	30	DGN. 3C
SM09097	SM09219	BDKT R/L 1616 ID3C T18	1	16	16	125	16.4	18	36	
SM09073	SM09226	BDKT R/L 2020 ID3C T20	1	20	20	125	20.4	20	40	
SM57333	SM57340	BDKT R/L 2020 ID3C T T20	2	20	20	125	20.4	20	40	
SM09080	SM09240	BDKT R/L 2525 ID3C T22	1	25	25	150	25.3	22	44	
SM57357	SM57364	BDKT R/L 2525 ID3C T T22	2	25	25	150	25.3	22	44	
SM57296	SM57302	BDKT R/L 2525 ID3C T25	1	25	25	150	25.3	25	50	
SM57371	SM57388	BDKT R/L 2525 ID3C T T25	2	25	25	150	25.3	25	50	
SM57319	SM57326	BDKT R/L 2525 ID3C T40	1	25	25	170	25.3	40	80	
SM09110	SM09257	BDKT R/L 3232 ID3C T22	1	32	32	170	32.4	22	44	
SM47983	SM47990	BDKT R/L 1212 IG3C T15	1	12	12	100	12.3	15	30	GRIP 3C
SM48003	SM48010	BDKT R/L 1616 IG3C T18	1	16	16	125	16.4	18	36	
SM48027	SM48034	BDKT R/L 2020 IG3C T20	1	20	20	125	20.4	20	40	
SM48041	SM48058	BDKT R/L 2525 IG3C T22	1	25	25	150	25.3	22	44	
SM48065	SM48072	BDKT R/L 3232 IG3C T22	1	32	32	170	32.4	22	44	
SM09127	SM09141	BDKT R/L 2020 IG4C T20	1	20	20	125	20.3	20	40	GRIP 4C
SM57395	SM57401	BDKT R/L 2020 IG4C T T20	2	20	20	125	20.3	20	40	
SM09134	SM09264	BDKT R/L 2525 IG4C T22	1	25	25	150	25.4	22	44	
SM57456	SM57463	BDKT R/L 2525 IG4C T T22	2	25	25	150	25.4	22	44	
SM57418	SM57425	BDKT R/L 2525 IG4C T25	1	25	25	150	25.4	25	50	
SM57470	SM57487	BDKT R/L 2525 IG4C T T25	2	25	25	150	25.4	25	50	
SM57432	SM57449	BDKT R/L 2525 IG4C T40	1	25	25	170	25.4	40	80	
SM09158	SM09271	BDKT R/L 3232 IG4C T22	1	32	32	170	32.6	22	44	
SM09165	SM09288	BDKT R/L 3232 IG5C T25	1	32	32	170	32.8	25	50	GRIP 5C
SM66595	**SM66601**	**BDKT R/L 2525 IG6C T30**	**1**	**25**	**25**	**170**	**32.8**	**30**	**60**	GRIP 6C
SM38837	SM38820	BDKT R/L 1616 IGM3C T15	1	16	16	125	16.3	15	34	GIM 3C
SM38806	SM38813	BDKT R/L 2020 IGM3C T20	1	20	20	125	20.3	20	40	
SM38769	SM38752	BDKT R/L 2525 ITG3C T T22	2	25	25	150	25.3	22	44	TGM 3C
SM57739	SM57777	BDKT R/L 2020 ITG3C T T8	2	20	20	125	20.3	8	16	
SM57746	SM57784	BDKT R/L 2525 ITG3C T T8	2	25	25	150	25.3	8	16	
SM57753	SM57791	BDKT R/L 2020 ITG4C T T10	2	20	20	125	20.3	10	20	TGM 4C
SM57760	SM57807	BDKT R/L 2525 ITG4C T T16	2	25	25	150	25.3	16	32	

Descriptions	Master Insert*	Spare Parts	
		Screw	*Allen Key*
1212	DGN / GRIP (2C - 3C)	BKTV M5x17-9211	SAK-AA4-9903
1616		BKTV M6x25-9215	
2020 - 3232	DGN (2C - 2.2C)	BKTV M6x25-9215	
2020 - 3232	DGN / GRIP / GIM / TGM (3C - 5C)	BKTV M8x1x25-9232	

*Suitable Insert brand is ISC

EXTERNAL GROOVING TOOLS

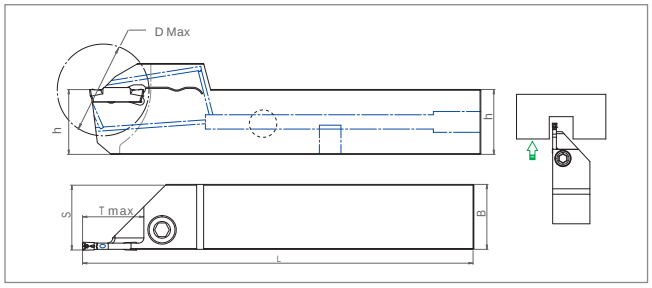

Ordering Code		Item Designation	Dimensions (mm)							Master Insert*
Direction		BDKT R/L TDC		h	B	L	S	t Max	D Max	
Right	Left									
SM67677	SM67691	BDKT 2525 R/L T3C T22 JC	✓	25	25	150	25,4	22	44	TDC. 3C
SM67684	SM67707	BDKT 2525 R/L T4C T22 JC	✓	25	25	150	25,4	22	44	TDC. 4C

Cooling accessories are optional / See Page "529" for cooling accessory.
Soğutma ekipmanları opsiyoneldir / Bkz. Sayfa "529" Soğutma aksesuarları için

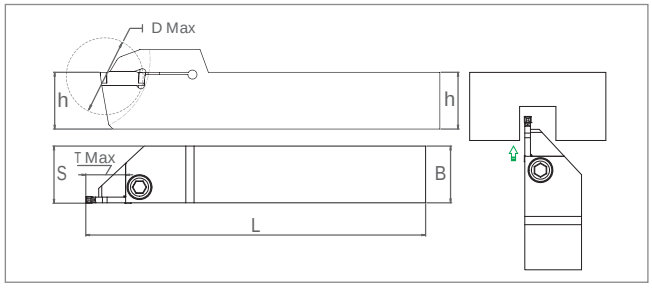

Ordering Code		Item Designation	Dimensions (mm)						Master Insert*
Direction		BDKT R/L TDC	h	B	L	S	t Max	D Max	
Right	Left								
SM61576	**SM61583**	**BDKT R/L 1212 T2C T12**	**12**	**12**	**100**	**12.3**	**12**	**24**	TDC. 2C
SM10055	SM10154	BDKT R/L 1212 T2C T15	12	12	100	12.3	15	30	
SM10062	SM10161	BDKT R/L 1616 T2C T18	16	16	125	16.3	18	36	
SM10079	SM10178	BDKT R/L 2020 T2C T18	20	20	125	20.3	18	36	
SM10086	SM10185	BDKT R/L 2525 T2C T18	25	25	150	25.3	18	36	
SM10093	SM10192	BDKT R/L 1212 T3C T15	12	12	100	12.3	15	30	TDC. 3C
SM10109	SM10208	BDKT R/L 1616 T3C T18	16	16	125	16.4	18	36	
SM10116	SM10215	BDKT R/L 2020 T3C T20	20	20	125	20.4	20	40	
SM10123	SM10222	BDKT R/L 2525 T3C T22	25	25	150	25.4	22	44	
SM10130	SM10239	BDKT R/L 2020 T4C T20	20	20	125	20.4	20	40	TDC. 4C
SM10147	SM10246	BDKT R/L 2525 T4C T22	25	25	150	25.4	22	44	

Descriptions	Master Insert*	Spare Parts		
		Screw	Allen Key	Plug
1212	TDC(2C - 3C)	BKTV M5x17-9211	SAK-AA4-9903	-
1616		BKTV M6x25-9215		
2020 - 2525	TDC (2C)	BKTV M6x25-9215		
2020 - 2525	TDC(3C - 4C)	BKTV M8x1x25-9232		
2525-JC				SMHT G1/8-AA4 9260

*Suitable Insert brand is TGTC

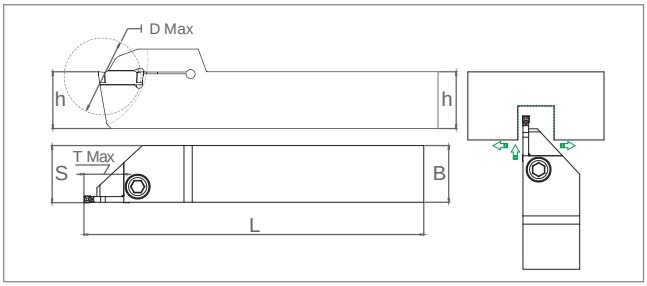

Ordering Code		Item Designation	Dimensions (mm)					Master Insert*	Master Insert*
Direction		BDKT R/L RDT	h	B	L	S	t Max	D Max	
Right	Left								
SM67264	SM67325	BDKT 2020 R/L RD2C T18	20	20	125	20.4	18	36	RDT 2C
SM67271	SM67332	BDKT 2525 R/L RD2C T18	25	25	150	25.4	18	36	
SM67288	SM67349	BDKT 2020 R/L RD3C T20	20	20	125	20.4	20	40	RDT 3C
SM67295	SM67356	BDKT 2525 R/L RD3C T22	25	25	150	25.4	22	44	
SM67301	SM67363	BDKT 2020 R/L RD4C T20	20	20	125	20.4	20	40	RDT 4C
SM67318	SM67370	BDKT 2525 R/L RD4C T22	25	25	150	25.4	22	44	

Descriptions	Master Insert*	Spare Parts	
		Screw	Allen Key
2020 - 2525	RDT (2C)	BKTV M6x25-9215	SAK-AA4-9903
	RDT (3C - 4C)	BKTV M8x1x25-9232	

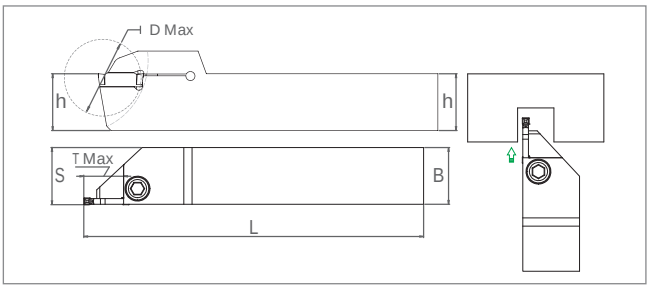

Ordering Code		Item Designation	Dimensions (mm)						Master Insert**
Direction		BDKT R/L GCTX	h	B	L	S	t Max	D Max	
Right	Left								
SM25158	SM24960	BDKT R/L 1616 LM2C T18	16	16	125	16.2	18	36	GCTX 2C
SM24946	SM24922	BDKT R/L 2020 LM2C T18	20	20	125	20.2	18	36	
SM24908	SM24885	BDKT R/L 2525 LM2C T18	25	25	150	25.2	18	40	
SM24977	SM24953	BDKT R/L 1616 LM3C T18	16	16	125	16.3	18	44	GCTX 3C
SM24939	SM24915	BDKT R/L 2020 LM3C T20	20	20	125	20.3	20	40	
SM24892	SM24878	BDKT R/L 2525 LM3C T22	25	25	150	25.3	22	44	

Descriptions	Master Insert**	Spare Parts	
		Screw	Allen Key
1616	GCTX (2C - 3C)	BKTV M6x25-9215	SAK-AA4-9903
2020 - 2525	GCTX (2C)	BKTV M6x25-9215	
2020 - 2525	GCTX (3C)	BKTV M8x1x25-9232	

*Suitable Insert brand is TGTC
**Suitable Insert brand is LMN

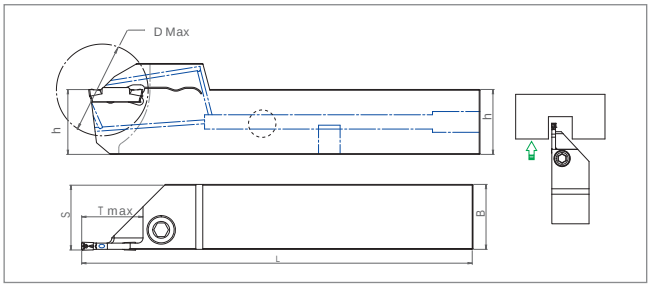

Ordering Code		Item Designation	Dimensions (mm)							Master Insert*
Direction		BDKT R/L 123		h	B	L	S	t Max	D Max	
Right	Left									
SM56268	SM56275	BDKT R/L 2525 123 3C T22 JC	✓	25	25	150	25.4	22	44	123-3C
SM56282	SM56299	BDKT R/L 2525 123 4C T22 JC	✓	25	25	150	25.4	22	44	123-4C

Cooling accessories are optional / See Page "529" for cooling accessory.
Soğutma ekipmanları opsiyoneldir / Bkz. Sayfa "529" Soğutma aksesuarları için

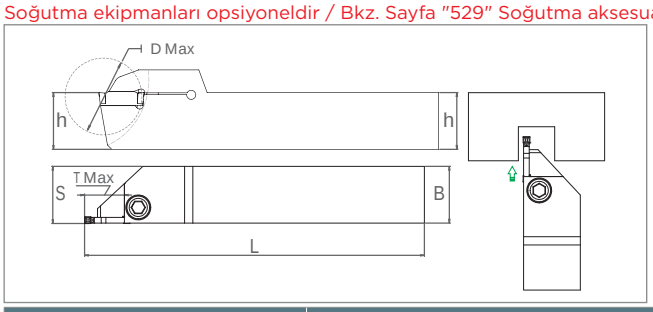

Ordering Code		Item Designation	Dimensions (mm)						Master Insert*
Direction		BDKT R/L 123	h	B	L	S	t Max	D Max	
Right	Left								
SM38707	SM38691	BDKT R/L 1212 123 2C T15	12	12	100	12.3	15	30	123-2C
SM09875	SM09950	BDKT R/L 1616 123 2C T18	16	16	125	16.3	18	36	
SM09851	SM09967	BDKT R/L 2020 123 2C T18	20	20	125	20.3	18	36	
SM09868	SM09974	BDKT R/L 2525 123 2C T18	25	25	150	25.3	18	36	
SM38677	SM38684	BDKT R/L 1212 123 3C T15	12	12	100	12.3	15	30	123-3C
SM09899	SM10000	BDKT R/L 1616 123 3C T18	16	16	125	16.4	18	36	
SM09882	SM09998	BDKT R/L 2020 123 3C T20	20	20	125	20.4	20	40	
SM09905	SM09981	BDKT R/L 2525 123 3C T22	25	25	150	25.4	22	44	
SM57814	SM57838	BDKT R/L 2525 123 3C T25	25	25	150	25.4	25	50	
SM57821	SM57845	BDKT R/L 2525 123 3C T40	25	25	170	25.4	40	80	
SM09912	SM10017	BDKT R/L 2020 123 4C T20	20	20	125	20.4	20	40	123-4C
SM09929	SM10024	BDKT R/L 2525 123 4C T22	25	25	150	25.4	22	44	
SM57852	SM57876	BDKT R/L 2525 123 4C T25	25	25	150	25.4	25	50	
SM57869	SM57883	BDKT R/L 2525 123 4C T40	25	25	170	25.4	40	80	
SM09936	SM10031	BDKT R/L 2020 123 5C T22	20	20	125	20.5	22	44	123-5C
SM09943	SM10048	BDKT R/L 2525 123 5C T25	25	25	150	25.5	25	50	

Descriptions	Master Insert*	Spare Parts		
		Screw	Allen Key	Plug
1212	123 (2C - 3C)	BKTV M5x17-9211	SAK-AA4-9903	-
1616	123 (2C - 5C)	BKTV M6x25-9215		
2020 - 2525	123 (2C)	BKTV M6x25-9215		
2020 - 2525	123 (3C - 5C)	BKTV M8x1x25-9232		SMHT G1/8-AA4 9260
2525-JC				

*Suitable Insert brand is SNDVK

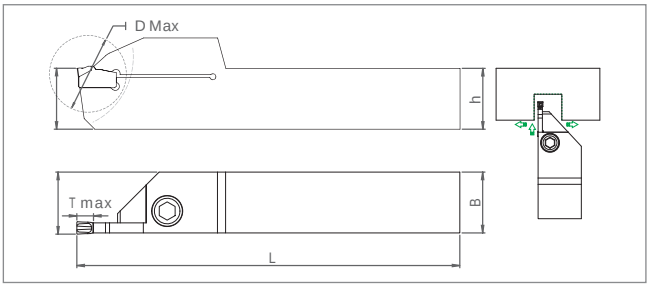

Ordering Code		Item Designation	Dimensions (mm)						Master Insert*
Direction		BDKT R/L 151.2	h	B	L	S	t Max	D Max	
Right	Left								
SM48089	SM48096	BDKT R/L 1616 151.2 2C T18	16	16	125	16.2	18	36	151.2-2C
SM48102	SM48119	BDKT R/L 2020 151.2 2C T18	20	20	125	20.2	18	36	
SM48126	SM48133	BDKT R/L 2525 151.2 2C T18	25	25	150	25.2	18	36	
SM48140	SM48157	BDKT R/L 1616 151.2 3C T18	16	16	125	16.3	18	36	151.2-3C
SM48164	SM48171	BDKT R/L 2020 151.2 3C T20	20	20	125	20.3	20	40	
SM48188	SM48195	BDKT R/L 2525 151.2 3C T22	25	25	150	25.3	22	44	
SM48201	SM48218	BDKT R/L 1616 151.2 4C T18	16	16	125	16.4	18	36	151.2-4C
SM48225	SM48232	BDKT R/L 2020 151.2 4C T20	20	20	125	20.4	20	40	
SM48256	SM48263	BDKT R/L 2525 151.2 4C T22	25	25	150	25.4	22	44	
SM48294	SM48300	BDKT R/L 2020 151.2 5C T20	20	20	125	20.5	20	40	151.2-5C
SM48287	SM48270	BDKT R/L 2525 151.2 5C T25	25	25	150	25.5	25	50	

Descriptions	Master Insert*	Spare Parts	
		Screw	Allen Key
1616	151.2 (2C - 5C)	BKTV M6x25-9215	SAK-AA4-9903
2020 - 2525	151.2 (2C)	BKTV M6x25-9215	
2020 - 2525	151.2 (3C - 5C)	BKTV M8x1x25-9232	

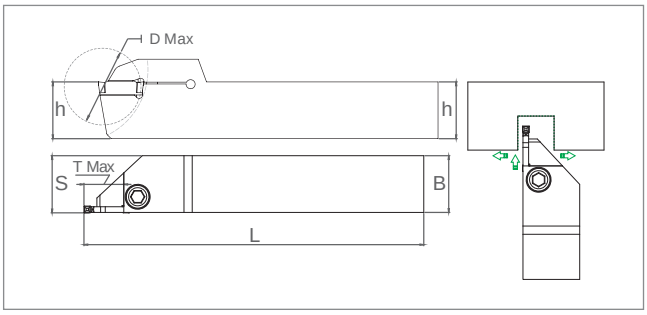

Ordering Code		Item Designation	Dimensions (mm)						Master Insert**
Direction		BDKT R/L-GP	h	B	L	S	t Max	D Max	
Right	Left								
SM67554	SM67615	BDKT R/L 2020 GP2C T18	20	20	125	20.4	18	36	GP2C
SM67561	SM67622	BDKT R/L 2525 GP2C T18	25	25	150	25.4	18	36	
SM67578	SM67639	BDKT R/L 2020 GP3C T20	20	20	125	20.4	20	40	GP3C
SM67585	SM67646	BDKT R/L 2525 GP3C T22	25	25	150	25.4	22	44	
SM67592	SM67653	BDKT R/L 2020 GP4C T20	20	20	125	20.4	20	40	GP4C
SM67608	SM67660	BDKT R/L 2525 GP4C T22	25	25	150	25.4	22	44	

Descriptions	Master Insert*	Spare Parts	
		Screw	Allen Key
2020 - 2525	GP (2C)	BKTV M6x25-9215	SAK-AA4-9903
	GP (3C - 4C)	BKTV M8x1x25-9232	

*Suitable Insert brand is SNDVK
**Suitable Insert brand is PLBT

EXTERNAL GROOVING TOOLS

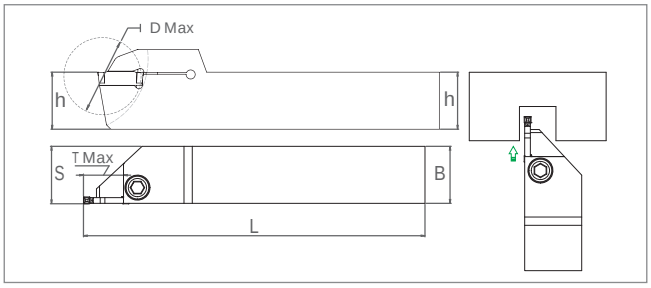

Ordering Code		Item Designation	Dimensions (mm)						Master Insert*
Direction		*BDKT R/L ..GX16 / ..GX24*	*h*	*B*	*L*	*S*	*t Max*	*D Max*	
Right	*Left*								
SM45811	SM45828	BDKT R/L 2020 2GX16 T18	20	20	125	20.2	18	36	2GX16
SM45897	SM45903	BDKT R/L 2525 2GX16 T18	25	25	150	25.2	18	36	
SM45835	SM45842	BDKT R/L 2020 3GX16 T20	20	20	125	20.2	20	40	3GX16
SM45910	SM45927	BDKT R/L 2525 3GX16 T22	25	25	150	25.2	22	44	
SM45859	SM45866	BDKT R/L 2020 2GX24 T18	20	20	125	20.3	18	36	2GX24
SM45934	SM45941	BDKT R/L 2525 2GX24 T18	25	25	150	25.3	18	36	
SM45873	SM45880	BDKT R/L 2020 3GX24 T20	20	20	125	20.3	20	40	3GX24
SM45958	SM45965	BDKT R/L 2525 3GX24 T22	25	25	150	25.3	22	44	
SM45972	SM45989	BDKT R/L 2525 4GX24 T22	25	25	150	25.5	22	44	4GX24

Descriptions	Master Insert*	Spare Parts	
		Screw	*Allen Key*
2020 - 2525	..GX16 - ..GX24 (2C)	BKTV M6x25-9215	SAK-AA4-9903
2020 - 2525	..GX16 - ..GX24 (3C - 4C)	BKTV M8x1x25-9232	

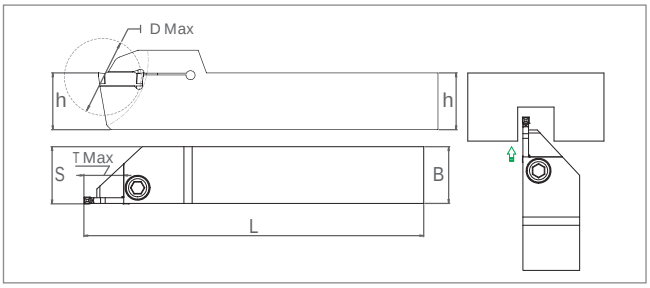

Ordering Code		Item Designation	Dimensions (mm)						Master Insert**
Direction		*BDKT R/L GDM*	*h*	*B*	*L*	*S*	*t Max*	*D Max*	
Right	*Left*								
SM45231	SM45248	BDKT R/L 2020 KYC2C T18	20	20	125	20.2	18	36	GDM 2020
SM45255	SM45262	BDKT R/L 2525 KYC2C T18	25	25	150	25.2	18	36	
SM45279	SM45286	BDKT R/L 2020 KYC3C T20	20	20	125	20.3	20	40	GDM 3020
SM45293	SM45309	BDKT R/L 2525 KYC3C T22	25	25	150	25.3	22	44	
SM45316	SM45323	BDKT R/L 2020 KYC4C T20	20	20	125	20.4	20	40	GDM 4020
SM45330	SM45347	BDKT R/L 2525 KYC4C T22	25	25	150	25.4	22	44	

Descriptions	Master Insert**	Spare Parts	
		Screw	*Allen Key*
2020 - 2525	GDM (2C)	BKTV M6x25-9215	SAK-AA4-9903
2020 - 2525	GDM (3C - 4C)	BKTV M8x1x25-9232	

*Suitable Insert brand is WLTR / CRTZ
**Suitable Insert brand is KYCR

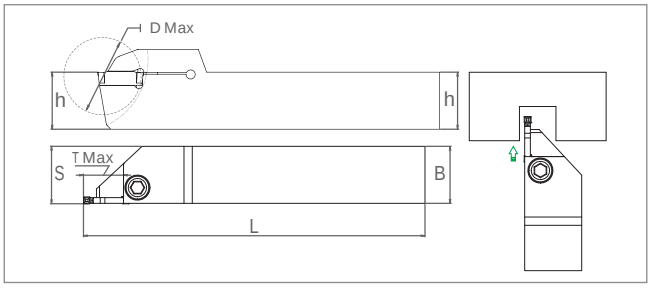

Ordering Code		Item Designation	Dimensions (mm)						Master Insert*
Direction		*BDKT R/L GCM*	*h*	*B*	*L*	*S*	*t Max*	*D Max*	
Right	*Left*								
SM24762	SM24717	BDKT R/L 1212 GCM 2C T15	12	12	100	12.2	15	30	GCM-2C
SM24847	SM24823	BDKT R/L 1616 GCM 2C T18	16	16	125	16.2	18	36	
SM24793	SM24786	BDKT R/L 2020 GCM 2C T18	20	20	125	20.2	18	36	
SM24755	SM24731	BDKT R/L 2525 GCM 2C T18	25	25	150	25.2	18	36	
SM24861	SM24854	BDKT R/L 1212 GCM 3C T15	12	12	100	12.2	15	30	GCM-3C
SM24830	SM24816	BDKT R/L 1616 GCM 3C T15	16	16	125	16.3	15	30	
SM24809	SM24779	BDKT R/L 2020 GCM 3C T20	20	20	125	20.3	20	40	
SM24748	SM24724	BDKT R/L 2525 GCM 3C T22	25	25	150	25.3	22	44	
SM64270	**SM67387**	**BDKT R/L 2525 GCM 3C T25**	**25**	**25**	**150**	**25.4**	**25**	**50**	
SM77218	**SM77232**	**BDKT R/L 2020 GCM 4C T20**	**20**	**20**	**125**	**20.4**	**20**	**40**	GCM-4C
SM77225	**SM77249**	**BDKT R/L 2525 GCM 4C T25**	**25**	**25**	**150**	**25.4**	**25**	**50**	

Descriptions	Master Insert*	Spare Parts	
		Screw	*Allen Key*
1212	GCM (2C - 3C)	BKTV M5x17-9211	SAK-AA4-9903
1616	GCM (2C - 3C)	BKTV M6x25-9215	
2020 - 2525	GCM (2C)	BKTV M6x25-9215	
2020 - 2525	GCM (3C)	BKTV M8x1x25-9232	
2020 - 2525	GCM (4C)		

*Suitable Insert brand is SMTM

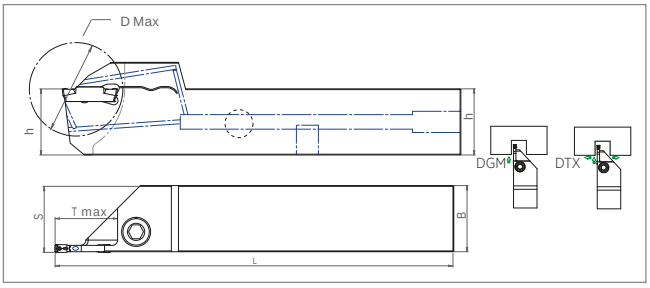

Ordering Code		Item Designation	Dimensions (mm)							Master Insert*
Direction		BDKT R/L DGM / DTX		h	B	L	S	t Max	D Max	
Right	Left									
SM67394	SM67417	BDKT R/L 2525 DG3C T22 JC	✓	25	25	150	25.4	22	44	DGM / DTX 3C
SM67400	SM67424	BDKT R/L 2525 DG4C T22 JC	✓	25	25	150	25.4	22	44	DGM / DTX 4C

Cooling accessories are optional / See Page "529" for cooling accessory.
Soğutma ekipmanları opsiyoneldir / Bkz. Sayfa "529" Soğutma aksesuarları için

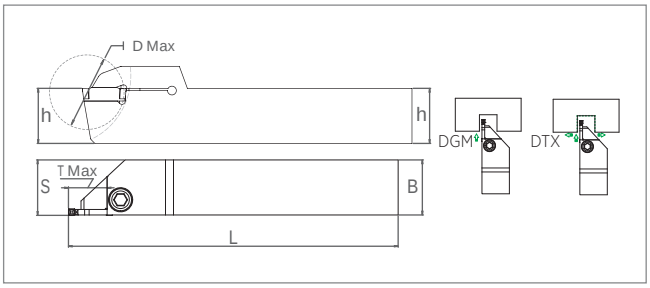

Ordering Code		Item Designation	Dimensions (mm)						Master Insert*
Direction		BDKT R/L DGM / DTX	h	B	L	S	t Max	D Max	
Right	Left								
SM61866	SM61873	BDKT R/L 1212 DG2C T15	12	12	100	12.2	15	30	DGM / DTX 2C
SM61880	SM61897	BDKT R/L 1616 DG2C T18	16	16	125	16.2	18	36	
SM57494	SM57555	BDKT R/L 2020 DG2C T18	20	20	125	20.3	18	36	
SM57500	SM57562	BDKT R/L 2525 DG2C T18	25	25	150	25.3	18	36	
SM57517	SM57579	BDKT R/L 2020 DG3C T20	20	20	125	20.4	20	40	DGM / DTX 3C
SM57524	SM57586	BDKT R/L 2525 DG3C T22	25	25	150	25.4	22	44	
SM57531	SM57593	BDKT R/L 2020 DG4C T20	20	20	125	20.4	20	40	DGM / DTX 4C
SM57548	SM57609	BDKT R/L 2525 DG4C T22	25	25	150	25.4	22	44	

Descriptions	Master Insert*	Spare Parts		
		Screw	Allen Key	Plug
1212	DTM / DTX (2C)	BKTV M5x17-9211	SAK-AA4-9903	-
1616 - 2525		BKTV M6x25-9215	SAK-AA4-9903	
2020 - 2525	DTM / DTX (3C - 4C)	BKTV M8x1x25-9232		
2525-JC				SMHT G1/8-AA4 9260

*Suitable Insert brand is TNGLY

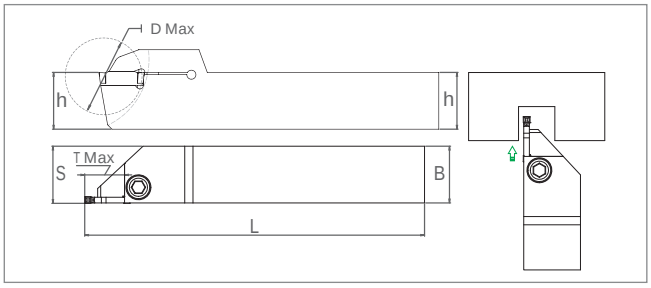

Ordering Code		Item Designation	Dimensions (mm)						Master Insert*
Direction		BDKT R/L ZT.D	h	B	L	S	t Max	D Max	
Right	Left								
SM10277	SM10376	BDKT R/L 1616 ZCC2 2C T18	16	16	125	16.3	18	36	ZT.D 2C
SM10253	SM10352	BDKT R/L 2020 ZCC2 2C T18	20	20	125	20.3	18	36	
SM10260	SM10369	BDKT R/L 2525 ZCC2 2C T18	25	25	150	25.3	18	36	
SM10307	SM10406	BDKT R/L 1616 ZCC2 3C T18	16	16	125	16.5	18	36	ZT.D 3C
SM10284	SM10383	BDKT R/L 2020 ZCC2 3C T20	20	20	125	20.3	20	40	
SM10291	SM10390	BDKT R/L 2525 ZCC2 3C T22	25	25	150	25.3	22	44	
SM10314	SM10413	BDKT R/L 2020 ZCC2 4C T20	20	20	125	20.5	20	40	ZT.D 4C
SM10321	SM10420	BDKT R/L 2525 ZCC2 4C T22	25	25	150	25.5	22	44	
SM10338	SM10437	BDKT R/L 2020 ZCC2 5C T22	20	20	125	20.5	22	44	ZT.D 5C
SM10345	SM10444	BDKT R/L 2525 ZCC2 5C T25	25	25	150	25.5	25	50	

Descriptions	Master Insert*	Spare Parts	
		Screw	Allen Key
1212	ZT..(2C - 3C)	BKTV M5x17-9211	SAK-AA4-9903
1616		BKTV M6x25-9215	
2020 - 2525	ZT.. (2C)	BKTV M6x25-9215	
2020 - 2525	ZT.. (3C - 5C)	BKTV M8x1x25-9232	

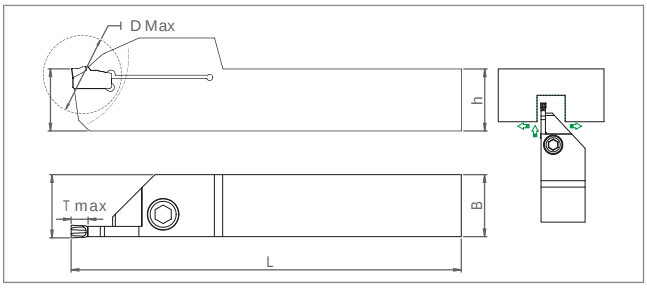

Ordering Code		Item Designation	Dimensions (mm)						Master Insert**
Direction		BDKT R/L-ZQMX	h	B	L	S	t Max	D Max	
Right	Left								
SM67714	SM67752	BDKT R/L 2020 ZQ3C T20	20	20	125	20.4	20	40	ZQMX-3C
SM67721	SM67769	BDKT R/L 2525 ZQ3C T22	25	25	150	25.4	22	44	
SM67738	SM67776	BDKT R/L 2020 ZQ4C T20	20	20	125	20.4	20	40	ZQMX-4C
SM67745	SM67783	BDKT R/L 2525 ZQ4C T22	25	25	150	25.4	22	44	

Descriptions	Master Insert*	Spare Parts	
		Screw	Allen Key
2020 - 2525	ZQMX (3C - 4C)	BKTV M8x1x25-9232	SAK-AA4-9903

*Suitable Insert brand is ZCC-CT

EXTERNAL GROOVING TOOLS

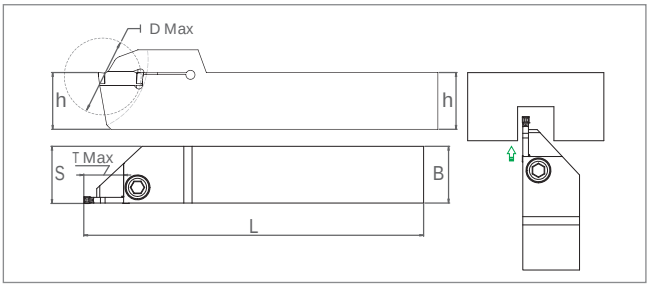

Ordering Code		Item Designation	Dimensions (mm)						Master Insert*
Direction		*BDKT R/L S229*	*h*	*B*	*L*	*S*	*t Max*	*D Max*	
Right	*Left*								
SM08892	SM08977	BDKT R/L 2020 S229 3C T20	20	20	125	20.5	20	40	S229-3C
SM01903	SM01910	BDKT R/L 2020 S229 3C T25	20	20	125	20.5	25	50	
SM08908	SM08984	BDKT R/L 2525 S229 3C T22	25	25	150	25.5	22	44	
SM08915	SM08991	BDKT R/L 2020 S229 4C T20	20	20	125	20.5	20	40	S229-4C
SM01934	**SM01927**	**BDKT R/L 2020 S229 4C T25**	**20**	**20**	**125**	**20.5**	**25**	**50**	
SM0892	SM09004	BDKT R/L 2525 S229 4C T22	25	25	150	25.5	22	44	
SM08946	SM09011	BDKT R/L 2020 S229 5C T20	20	20	125	20.5	20	40	S229-5C
SM08939	SM09028	BDKT R/L 2525 S229 5C T25	25	25	150	25.5	25	50	

Descriptions	Master Insert*	Spare Parts	
		Screw	*Allen Key*
2020 - 2525	S229 (2C)	BKTV M6x25-9215	SAK-AA4-9903
2020 - 2525	S229 (3C - 5C)	BKTV M8x1x25-9232	

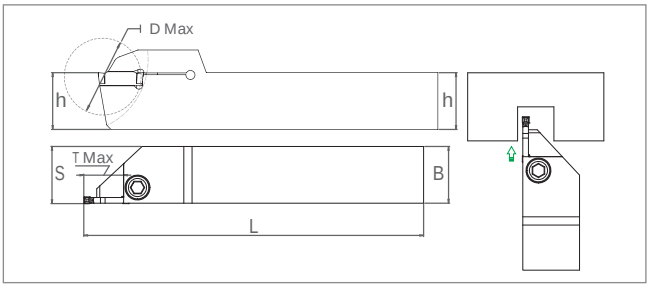

Ordering Code		Item Designation	Dimensions (mm)						Master Insert*
Direction		*BDKT R/L S224*	*h*	*B*	*L*	*S*	*t Max*	*D Max*	
Right	*Left*								
SM09295	SM09370	BDKT R/L 2020 S224 2C T18	20	20	125	20.3	18	36	S224-2C
SM09301	SM09387	BDKT R/L 2525 S224 2C T18	25	25	150	25.3	18	36	
SM09318	SM09394	BDKT R/L 2020 S224 3C T20	20	20	125	20.4	20	40	S224-3C
SM09325	SM09400	BDKT R/L 2525 S224 3C T22	25	25	150	25.4	22	44	
SM09332	SM09417	BDKT R/L 2020 S224 4C T20	20	20	125	20.4	20	40	S224-4C
SM09349	SM09424	BDKT R/L 2525 S224 4C T22	25	25	150	25.4	22	44	
SM09356	SM09431	BDKT R/L 2020 S224 5C T20	20	20	125	20.4	20	40	S224-5C
SM09363	SM09448	BDKT R/L 2525 S224 5C T25	25	25	150	25.4	25	50	

Descriptions	Master Insert*	Spare Parts	
		Screw	*Allen Key*
2020 - 2525	S224 (2C)	BKTV M6x25-9215	SAK-AA4-9903
2020 - 2525	S224 (3C - 5C)	BKTV M8x1x25-9232	

*Suitable Insert brand is HRN

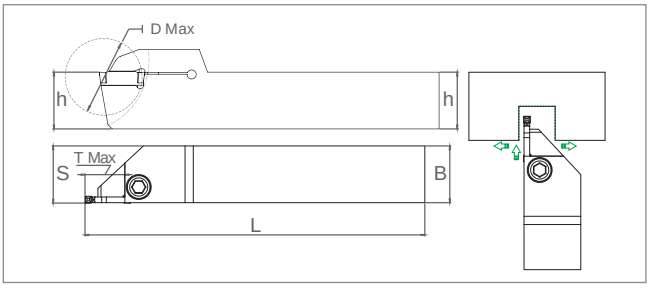

Ordering Code		Item Designation	Dimensions (mm)						Master Insert*
Direction		*BDKT R/L A4*	*h*	*B*	*L*	*S*	*t Max*	*D Max*	
Right	*Left*								
SM57616	SM57678	BDKT R/L 2020 A4 2C T18	20	20	125	20.3	18	36	A4 2C
SM57623	SM57685	BDKT R/L 2525 A4 2C T18	25	25	150	25.3	18	36	
SM57630	SM57692	BDKT R/L 2020 A4 3C T20	20	20	125	20.4	20	40	A4 3C
SM57647	SM57708	BDKT R/L 2525 A4 3C T22	25	25	150	25.4	22	44	
SM57654	SM57715	BDKT R/L 2020 A4 4C T20	20	20	125	20.4	20	40	A4 4C
SM57661	SM57722	BDKT R/L 2525 A4 4C T22	25	25	150	25.4	22	44	

Descriptions	Master Insert*	Spare Parts	
		Screw	*Allen Key*
2020 - 2525	A4 (2C)	BKTV M6x25-9215	SAK-AA4-9903
2020 - 2525	A4 (3C - 4C)	BKTV M8x1x25-9232	

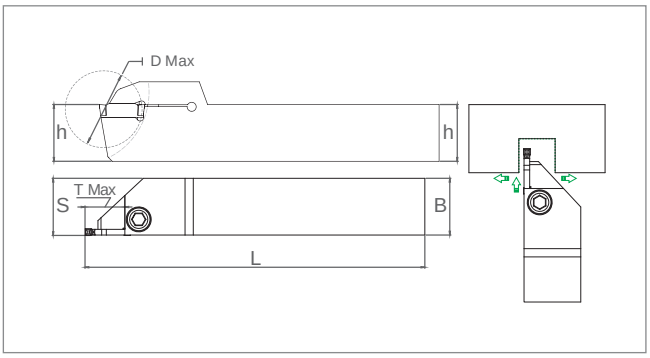

Ordering Code		Item Designation	Dimensions (mm)						Master Insert**
Direction		*BDKT R/L GL2 / GL3 / GL4*	*h*	*B*	*L*	*S*	*t Max*	*D Max*	
Right	*Left*								
SM76976	SM77034	BDKT R/L 2020 GL2C T18	20	20	125	20.4	18	36	GL2-2C
SM77003	SM77065	BDKT R/L 2525 GL2C T18	25	25	150	25.4	18	36	
SM76983	SM77041	BDKT R/L 2020 GL3C T20	20	20	125	20.4	20	40	GL3-3C
SM77010	SM77072	BDKT R/L 2525 GL3C T22	25	25	150	25.4	22	44	
SM76990	SM77058	BDKT R/L 2020 GL4C T20	20	20	125	20.4	20	40	GL4-4C
SM77027	SM77089	BDKT R/L 2525 GL4C T22	25	25	150	25.4	22	44	

Descriptions	Master Insert**	Spare Parts	
		Screw	*Allen Key*
2020 - 2525	GL (2C)	BKTV M6x25-9215	SAK-AA4-9903
2020 - 2525	GL (3C - 4C)	BKTV M8x1x25-9232	

*Suitable Insert brand is KNMTL
**Suitable Insert brand is PRMT

SWISS TYPE GROOVING TOOLS

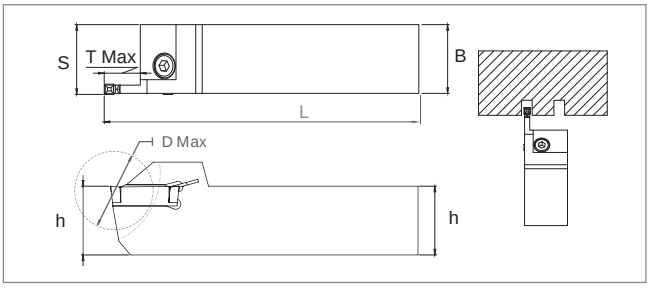

Ordering Code		Item Designation	Dimensions (mm)						Master Insert*
Direction		*BDKT R/L TDC SWISS TYPE*	*h*	*B*	*L*	*S*	*t Max*	*D Max*	
Right	*Left*								
SM48430	SM48447	BDKT R/L 1010 T2C K.O T10	10	10	120	10.20	10	20	TDC 2C
SM39605	SM48454	BDKT R/L 1212 T2C K.O T10	12	12	120	12.20	10	20	
SM48461	SM48478	BDKT R/L 1616 T2C K.O T16	16	16	125	16.20	16	32	
SM68292	**SM64218**	**BDKT R/L 1212 T3C K.O T12**	**12**	**12**	**120**	**12.20**	**10**	**20**	TDC 3C
SM62696	**SM62702**	**BDKT R/L 1616 T3C K.O T16**	**16**	**16**	**125**	**16.20**	**16**	**32**	

Descriptions	Master Insert*	Spare Parts	
		Screw	*Allen Key*
1010 - 1212	TDC (2C - 3C)	SSV M4x14-9516	STK-T15-9910
1616			

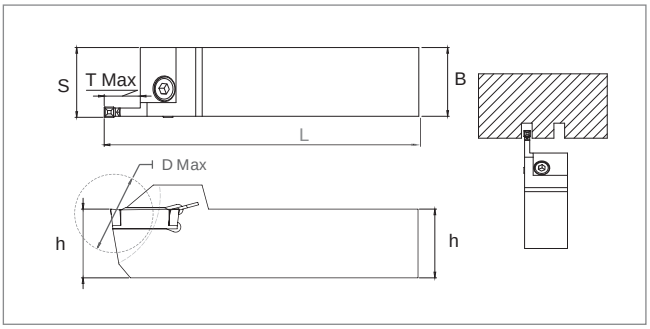

Ordering Code		Item Designation	Dimensions (mm)						Master Insert**
Direction		*BDKT R/L RDT SWISS TYPE*	*h*	*B*	*L*	*S*	*t Max*	*D Max*	
Right	*Left*								
SM68209	SM68247	BDKT R/L 1212 RD2C K.O T10	12	12	120	12.20	10	20	RDT 2C
SM68216	SM68254	BDKT R/L 1616 RD2C K.O T16	16	16	125	16.20	16	32	
SM68223	SM68261	BDKT R/L 1212 RD3C K.O T10	12	12	120	12.20	10	20	RDT 3C
SM68230	SM68278	BDKT R/L 1616 RD3C K.O T16	16	16	125	16.20	16	32	

Descriptions	Master Insert**	Spare Parts	
		Screw	*Allen Key*
1212	RDT (2C - 3C)	SSV M4x14-9516	STK-T15-9910
1616			

*Suitable Insert brand is TGTC

SWISS TYPE GROOVING TOOLS

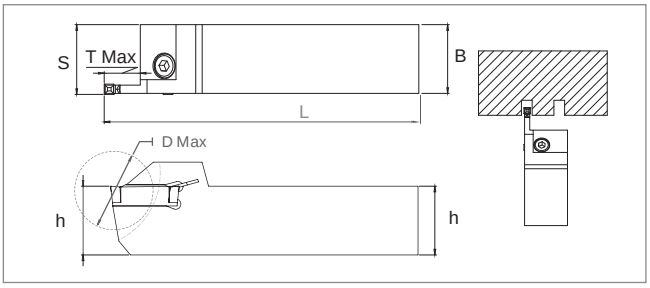

Ordering Code		Item Designation	Dimensions (mm)						Master Insert*
Direction		*BDKT R/L MGM. SWISS TYPE*	*h*	*B*	*L*	*S*	*t Max*	*D Max*	
Right	*Left*								
SM48317	SM48324	BDKT R/L 1010 K2C K.O T10	10	10	120	10.20	10	20	MGM. 2C
SM48331	SM48348	BDKT R/L 1212 K2C K.O T10	12	12	120	12.20	10	20	
SM48362	SM48355	BDKT R/L 1616 K2C K.O T16	16	16	125	16.20	16	32	
SM48386	SM48379	BDKT R/L 1010 K3C K.O T10	10	10	120	10.20	10	20	MGM. 3C
SM48393	SM48409	BDKT R/L 1212 K3C K.O T10	12	12	120	12.20	10	20	
SM48416	SM48423	BDKT R/L 1616 K3C K.O T16	16	16	125	16.20	16	32	
SM61613	SM62108	BDKT R/L 1616 K4C K.O T16	16	16	125	16.20	16	32	MGM. 4C

Descriptions	Master Insert*	Spare Parts	
		Screw	*Allen Key*
1010 - 1212	MGM. (2C - 4C)	SSV M4x14-9516	STK-T15-9910
1616			

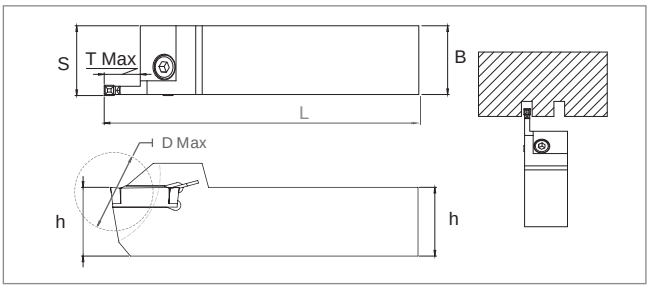

Ordering Code		Item Designation	Dimensions (mm)						Master Insert**
Direction		*BDKT R/L KGM. SWISS TYPE*	*h*	*B*	*L*	*S*	*t Max*	*D Max*	
Right	*Left*								
SM38363	SM38394	BDKT R/L 1010 KGM2C K.O T10	10	10	120	10.20	10	20	KGM. 2C
SM38370	SM38400	BDKT R/L 1212 KGM2C K.O T10	12	12	120	12.20	10	20	
SM38387	SM38417	BDKT R/L 1616 KGM2C K.O T16	16	16	125	16.20	16	32	

Descriptions	Master Insert*	Spare Parts	
		Screw	*Allen Key*
1010 - 1212	KGM. (2C)	SSV M4x14-9516	STK-T15-9910
1616			

*Suitable Insert brand is KRLY

SWISS TYPE GROOVING TOOLS

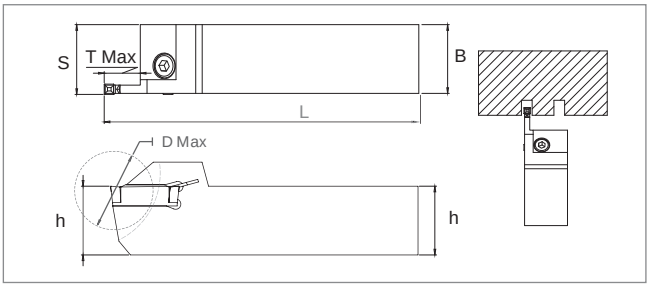

Ordering Code		Item Designation	Dimensions (mm)						Master Insert**
Direction		*BDKT R/L DGN SWISS TYPE*	*h*	*B*	*L*	*S*	*t Max*	*D Max*	
Right	*Left*								
SM40052	SM40069	BDKT R/L 1212 ID2C K.O T10	12	12	120	12.20	10	20	DGN 2C
SM40038	SM40045	BDKT R/L 1616 ID2C K.O T16	16	16	125	16.20	16	32	
SM38448	SM38493	BDKT R/L 1010 ID3C K.O T10	10	10	120	10.20	10	20	DGN 3C
SM38455	SM38509	BDKT R/L 1212 ID3C K.O T10	12	12	120	12.20	10	20	
SM38462	SM38523	BDKT R/L 1616 ID3C K.O T16	16	16	125	16.20	16	32	

Descriptions	Master Insert**	Spare Parts	
		Screw	*Allen Key*
1010 - 1212	DGN (2C - 3C)	SSV M4x14-9516	STK-T15-9910
1616			

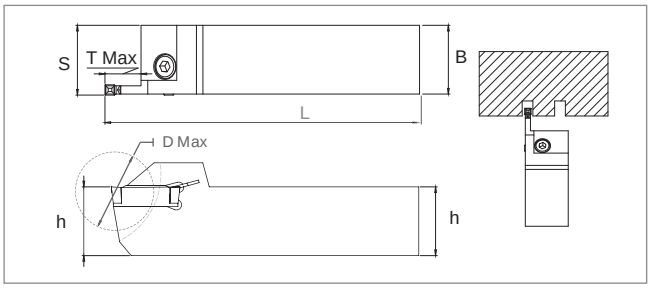

Ordering Code		Item Designation	Dimensions (mm)						Master Insert*
Direction		*BDKT R/L DGM/DTX. SWISS TYPE*	*h*	*B*	*L*	*S*	*t Max*	*D Max*	
Right	*Left*								
SM67806	SM67844	BDKT R/L 1212 DG2C K.O T10	12	12	120	12.20	10	20	DGM 2C
SM67813	SM67851	BDKT R/L 1616 DG2C K.O T16	16	16	125	16.20	16	32	
SM67820	SM67868	BDKT R/L 1212 DG3C K.O T10	12	12	120	12.20	10	20	DGM 2C
SM67837	SM67875	BDKT R/L 1616 DG3C K.O T16	16	16	125	16.20	16	32	

Descriptions	Master Insert*	Spare Parts	
		Screw	*Allen Key*
1010 - 1212	DGM/DTX (2C - 4C)	SSV M4x14-9516	STK-T15-9910
1616			

*Suitable Insert brand is ISC
**Suitable Insert brand is TNGLY

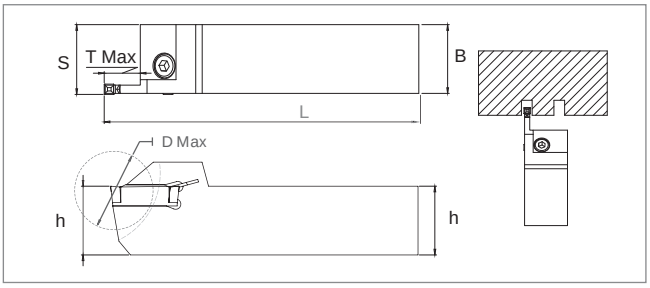

Ordering Code		Item Designation	Dimensions (mm)						Master Insert*
Direction		*BDKT R/L TDP SWISS TYPE*	*h*	*B*	*L*	*S*	*t Max*	*D Max*	
Right	*Left*								
SM68124	SM68162	BDKT R/L 1212 YG2C K.O T10	12	12	120	12.20	10	20	TDP2002
SM68131	SM68179	BDKT R/L 1616 YG2C K.O T16	16	16	125	16.20	16	32	
SM68148	SM68186	BDKT R/L 1212 YG3C K.O T10	12	12	120	12.20	10	20	TDP3002
SM68155	SM68193	BDKT R/L 1616 YG3C K.O T16	16	16	125	16.20	16	32	

Descriptions	Master Insert*	Spare Parts	
		Screw	*Allen Key*
1212	TDP (2C - 3C)	SSV M4x14-9516	STK-T15-9910
1616			

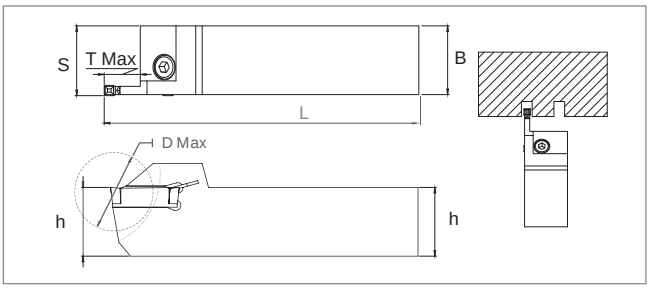

Ordering Code		Item Designation	Dimensions (mm)						Master Insert**
Direction		*BDKT R/L GDM. SWISS TYPE*	*h*	*B*	*L*	*S*	*t Max*	*D Max*	
Right	*Left*								
SM64874	SM64881	BDKT R/L 1212 KYC2C K.O T10	12	12	120	12.20	10	20	GDM 2020
SM64904	SM64898	BDKT R/L 1616 KYC2C K.O T16	16	16	125	16.20	16	32	
SM64911	SM64928	BDKT R/L 1212 KYC3C K.O T10	12	12	120	12.20	10	20	GDM 3020
SM64942	SM64935	BDKT R/L 1616 KYC3C K.O T16	16	16	125	16.20	16	32	

Descriptions	Master Insert*	Spare Parts	
		Screw	*Allen Key*
1010 - 1212	GDM (2C - 3C)	SSV M4x14-9516	STK-T15-9910
1616			

*Suitable Insert brand is YG-1
*Suitable Insert brand is KYCR

SWISS TYPE GROOVING TOOLS

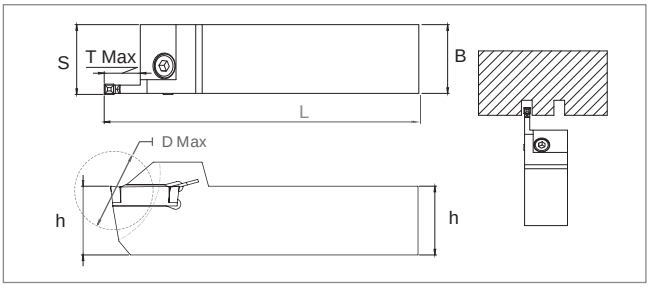

Ordering Code		Item Designation	Dimensions (mm)						Master Insert*
Direction		*BDKT R/L 123 SWISS TYPE*	*h*	*B*	*L*	*S*	*t Max*	*D Max*	
Right	*Left*								
SM67967	SM68001	BDKT R/L 1212 123 2C K.O T10	12	12	120	12.20	10	20	123-2C
SM67974	SM68018	BDKT R/L 1616 123 2C K.O T16	16	16	125	16.20	16	32	
SM67981	SM68025	BDKT R/L 1212 123 3C K.O T10	12	12	120	12.20	10	20	123-3C
SM67998	SM68032	BDKT R/L 1616 123 3C K.O T16	16	16	125	16.20	16	32	

Descriptions	Master Insert*	Spare Parts	
		Screw	*Allen Key*
1212	123-2C (2C - 3C)	SSV M4x14-9516	STK-T15-9910
1616			

*Suitable Insert brand is SNDVK

SWISS TYPE GROOVING TOOLS

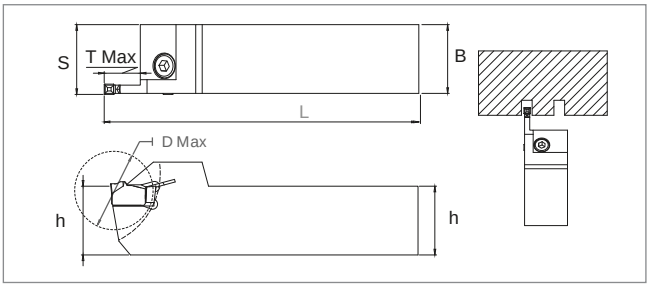

Ordering Code		Item Designation	Dimensions (mm)						Master Insert*
Direction		*BDKT R/L 151.2 SWISS TYPE*	*h*	*B*	*L*	*S*	*t Max*	*D Max*	
Right	*Left*								
SM68049	SM68087	BDKT R/L 1212 151.2 2C K.O T10	12	12	120	12.20	10	20	151.2-2C
SM68056	SM68094	BDKT R/L 1616 151.2 2C K.O T16	16	16	125	16.20	16	32	
SM68063	SM68100	BDKT R/L 1212 151.2 3C K.O T10	12	12	120	12.20	10	20	151.2-3C
SM68070	SM68117	BDKT R/L 1616 151.2 3C K.O T16	16	16	125	16.20	16	32	

Descriptions	Master Insert*	Spare Parts	
		Screw	*Allen Key*
1212	151.2 (2C - 3C)	SSV M4x14-9516	STK-T15-9910
1616			

A TYPE FACE GROOVING

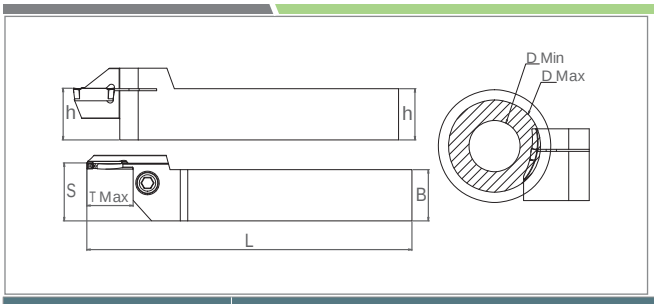

Ordering Code		Item Designation	Dimensions (mm)							Master Insert*
Direction		*A TYPE FACE GROOVING*								
Right	*Left*	*BDAT R/L MGM.*	*h*	*B*	*L*	*S*	*t max*	*øD min*	*øD max*	
SM10543	**SM63044**	BDAT R/**L** 2525 K3C (Ø24-36) T17	25	25	150	26.5	17	24	36	MGM. 3C
SM10567	**SM63068**	BDAT R/**L** 2525 K3C (Ø36-48) T17	25	25	150	26.5	17	36	48	
SM10550	**SM63051**	BDAT R/**L** 2525 K3C (Ø48-70) T17	25	25	150	26.5	17	48	70	
SM10536	**SM63037**	BDAT R/**L** 2525 K3C (Ø70-110) T17	25	25	150	26.5	17	70	110	
SM10512	**SM62863**	BDAT R/**L** 2525 K3C (Ø100-150) T17	25	25	150	26.5	17	100	150	
SM64393	**–**	**BDAT R 2525 K3C (Ø100-150) T22**	**25**	**25**	**150**	**26.5**	**22**	**100**	**150**	
SM10529	**SM62870**	BDAT R/**L** 2525 K3C (Ø150-200) T17	25	25	150	26.5	17	150	200	
SM39643	**SM63228**	BDAT R/**L** 2525 K3C (Ø200-350) T17	25	25	150	26.5	17	200	350	
SM39650	**SM63235**	BDAT R/**L** 2525 K3C (Ø300-500) T17	25	25	150	26.5	17	300	500	
SM10581	**SM62894**	BDAT R/**L** 2525 K4C (Ø24-36) T22	25	25	150	26.5	22	24	36	MGM. 4C
SM10604	**SM63082**	BDAT R/**L** 2525 K4C (Ø36-48) T22	25	25	150	26.5	22	36	48	
SM10598	**SM63075**	BDAT R/**L** 2525 K4C (Ø48-70) T22	25	25	150	26.5	22	48	70	
SM10574	**SM62887**	BDAT R/**L** 2525 K4C (Ø70-110) T22	25	25	150	26.5	22	70	110	
SM60651	**SM63303**	BDAT R/**L** 2525 K4C (Ø80-180) T32	25	25	150	26.5	32	80	180	
SM10628	**SM63105**	BDAT R/**L** 2525 K4C (Ø100-150) T22	25	25	150	26.5	22	100	150	
SM10611	**SM63099**	BDAT R/**L** 2525 K4C (Ø150-200) T22	25	25	150	26.5	22	150	200	
SM61668	**SM63310**	BDAT R/**L** 2525 K4C (Ø180-800) T32	25	25	150	26.5	32	180	800	
SM39667	**SM63242**	BDAT R/**L** 2525 K4C (Ø200-350) T22	25	25	150	26.5	22	200	350	
SM39674	**SM62955**	BDAT R/**L** 2525 K4C (Ø300-500) T22	25	25	150	26.5	22	300	500	
SM10635	**SM62900**	BDAT R/**L** 2525 K5C (Ø36-48) T25	25	25	150	26.5	25	36	48	MGM. 5C
SM10659	**SM62917**	BDAT R/**L** 2525 K5C (Ø48-70) T25	25	25	150	26.5	25	48	70	
SM10666	**SM63112**	BDAT R/**L** 2525 K5C (Ø70-110) T25	25	25	150	26.5	25	70	110	
SM61675	**SM63327**	BDAT R/**L** 2525 K5C (Ø80-180) T32	25	25	150	26.5	32	80	180	
SM10673	**SM63129**	BDAT R/**L** 2525 K5C (Ø100-150) T25	25	25	150	26.5	25	100	150	
SM64409	**–**	**BDAT R 2525 K5C (Ø110-200) T12**	**25**	**25**	**150**	**26.5**	**12**	**110**	**200**	
SM10680	**SM63136**	BDAT R/**L** 2525 K5C (Ø150-200) T25	25	25	150	26.5	25	150	200	
SM61682	**SM63334**	BDAT R/**L** 2525 K5C (Ø180-800) T32	25	25	150	26.5	32	150	800	
SM39681	**SM62962**	BDAT R/**L** 2525 K5C (Ø200-350) T25	25	25	150	26.5	25	200	350	
SM39803	**SM62979**	BDAT R/**L** 2525 K5C (Ø300-500) T25	25	25	150	26.5	25	300	500	
SM66427	**–**	**BDAT/R 2525 K6C (Ø48-70) T25**	**25**	**25**	**150**	**26.5**	**25**	**48**	**70**	MGM. 6C
SM66434	**–**	**BDAT/R 2525 K6C (Ø70-110) T25**	**25**	**25**	**150**	**26.5**	**25**	**70**	**110**	
SM66465	**–**	**BDAT/R 2525 K6C (Ø80-180) T32**	**25**	**25**	**150**	**26.5**	**32**	**80**	**180**	
SM66441	**–**	**BDAT/R 2525 K6C (Ø100-150) T25**	**25**	**25**	**150**	**26.5**	**25**	**100**	**150**	
SM66458	**–**	**BDAT/R 2525 K6C (Ø150-200) T25**	**25**	**25**	**150**	**26.5**	**25**	**150**	**200**	
SM66472	**–**	**BDAT/R 2525 K6C (Ø180-800) T32**	**25**	**25**	**150**	**26.5**	**32**	**180**	**800**	

Descriptions	Master Insert*	Spare Parts	
		Screw	*Allen Key*
2525	MGM (3C - 6C)	BKTV M8x1x25-9232	SAK-AA4-9903

*Suitable Insert brand is KRLY

L TYPE FACE GROOVING

SMOXH® CUTTING TOOLS
Kalitenin Yükselen Gücü

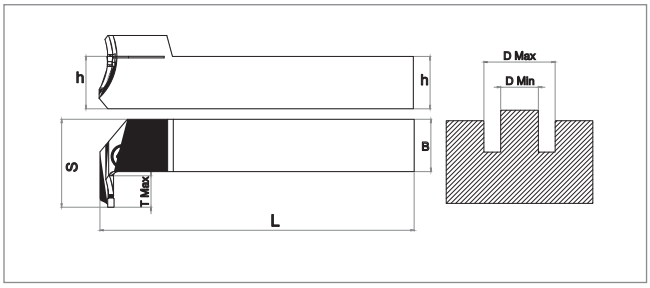

Ordering Code	Item Designation	Dimensions (mm)							Master Insert*
Direction	*L TYPE FACE GROOVING*	*h*	*B*	*L*	*S*	*t max*	*øD min*	*øD max*	
Right	*BDAT-LT MGM.*								
SM37854	BDAT-LT 2525 K3C (Ø24-36) T17	25	25	150	44	17	24	36	MGM. 3C
SM34624	BDAT-LT 2525 K3C (Ø36-48) T17	25	25	150	44	17	36	48	
SM34631	BDAT-LT 2525 K3C (Ø48-70) T17	25	25	150	44	17	48	70	
SM34648	BDAT-LT 2525 K3C (Ø70-110) T17	25	25	150	44	17	70	110	
SM34655	BDAT-LT 2525 K3C (Ø100-150) T17	25	25	150	44	17	100	150	
SM34662	BDAT-LT 2525 K3C (Ø150-200) T17	25	25	150	44	17	150	200	
SM39766	BDAT-LT 2525 K3C (Ø200-350) T17	25	25	150	44	17	200	350	
SM39773	BDAT-LT 2525 K3C (Ø300-500) T17	25	25	150	44	17	300	500	
SM37861	BDAT-LT 2525 K4C (Ø36-48) T20	25	25	150	47	20	36	48	MGM. 4C
SM37878	BDAT-LT 2525 K4C (Ø48-70) T20	25	25	150	47	20	48	70	
SM34679	BDAT-LT 2525 K4C (Ø70-110) T20	25	25	150	47	20	70	110	
SM34686	BDAT-LT 2525 K4C (Ø100-150) T20	25	25	150	47	20	100	150	
SM34693	BDAT-LT 2525 K4C (Ø150-200) T20	25	25	150	47	20	150	200	
SM39780	BDAT-LT 2525 K4C (Ø200-350) T20	25	25	150	47	20	200	350	
SM39797	BDAT-LT 2525 K4C (Ø300-500) T20	25	25	150	47	20	300	500	

Descriptions	Master Insert*	Spare Parts	
		Screw	*Allen Key*
2525	MGM (3C - 4C)	BKTV M8x1x25-9232	SAK-AA4-9903

*Suitable Insert brand is KRLY

A AND L TYPE FACE GROOVING

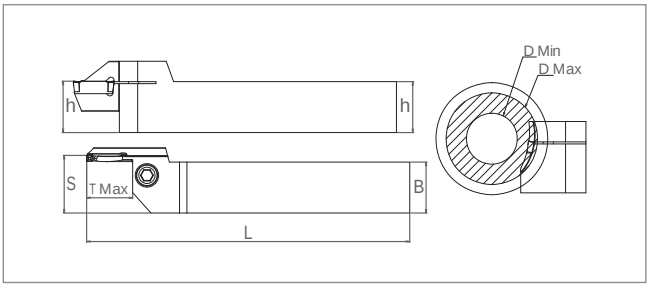

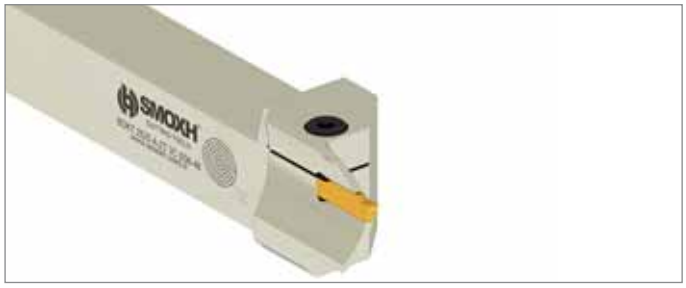

Ordering Code		Item Designation	Dimensions (mm)							Master Insert*
Direction		*A TYPE FACE GROOVING*								
Right	*Left*	*BDAT R/L ZT.D*	*h*	*B*	*L*	*S*	*t max*	*øD min*	*øD max*	
SM34402	**SM62924**	BDAT R/**L** 2525 ZT 3C (Ø24-36) T17	25	25	150	26.5	17	24	36	ZT.D 3C
SM34419	**SM63143**	BDAT R/**L** 2525 ZT 3C (Ø36-48) T17	25	25	150	26.5	17	36	48	
SM34426	**SM63150**	BDAT R/**L** 2525 ZT 3C (Ø48-70) T17	25	25	150	26.5	17	48	70	
SM34433	**SM63167**	BDAT R/**L** 2525 ZT 3C (Ø70-110) T17	25	25	150	26.5	17	70	110	
SM34440	**SM63174**	BDAT R/**L** 2525 ZT 3C (Ø100-150) T17	25	25	150	26.5	17	100	150	
SM34457	**SM62931**	BDAT R/**L** 2525 ZT 3C (Ø150-200) T17	25	25	150	26.5	17	150	200	
SM39810	**SM62986**	BDAT R/**L** 2525 ZT 3C (Ø200-350) T17	25	25	150	26.5	17	200	350	
SM39827	**SM63273**	BDAT R/**L** 2525 ZT 3C (Ø300-500) T17	25	25	150	26.5	17	300	500	
SM34464	**SM62948**	BDAT R/**L** 2525 ZT 4C (Ø36-48) T22	25	25	150	26.5	22	36	48	ZT.D. 4C
SM34471	**SM63181**	BDAT R/**L** 2525 ZT 4C (Ø48-70) T22	25	25	150	26.5	22	48	70	
SM34488	**SM63198**	BDAT R/**L** 2525 ZT 4C (Ø70-110) T22	25	25	150	26.5	22	70	110	
SM34495	**SM63204**	BDAT R/**L** 2525 ZT 4C (Ø100-150) T22	25	25	150	26.5	22	100	150	
SM34501	**SM63211**	BDAT R/**L** 2525 ZT 4C (Ø150-200) T22	25	25	150	26.5	22	150	200	
SM39834	**SM63280**	BDAT R/**L** 2525 ZT 4C (Ø200-350) T22	25	25	150	26.5	22	200	350	
SM39841	**SM63297**	BDAT R/**L** 2525 ZT 4C (Ø300-500) T22	25	25	150	26.5	22	300	500	

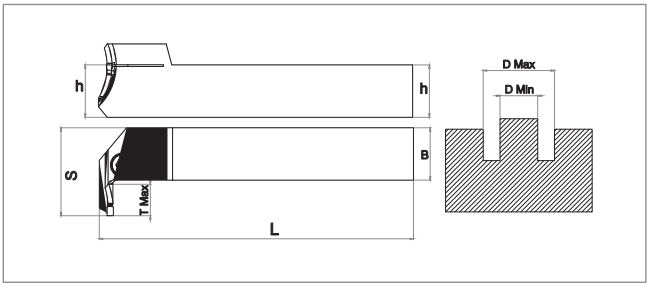

Ordering Code	Item Designation	Dimensions (mm)							Master Insert*
Direction	*L TYPE FACE GROOVING*								
Right	*BDAT-LT ZT..*	*h*	*B*	*L*	*S*	*t max*	*øD min*	*øD max*	
SM34518	BDAT-LT 2525 ZT 3C (Ø24-36) T17	25	25	150	44	17	24	36	ZTFD 3C
SM34525	BDAT-LT 2525 ZT 3C (Ø36-48) T17	25	25	150	44	17	36	48	
SM34532	BDAT-LT 2525 ZT 3C (Ø48-70) T17	25	25	150	44	17	48	70	
SM34549	BDAT-LT 2525 ZT 3C (Ø70-110) T17	25	25	150	44	17	70	110	
SM34556	BDAT-LT 2525 ZT 3C (Ø100-150) T17	25	25	150	44	17	100	150	
SM34563	BDAT-LT 2525 ZT 3C (Ø150-200) T17	25	25	150	44	17	150	200	
SM39728	BDAT-LT 2525 ZT 3C (Ø200-350) T17	25	25	150	44	17	200	350	
SM39735	BDAT-LT 2525 ZT 3C (Ø300-500) T17	25	25	150	44	17	300	500	
SM34570	BDAT-LT 2525 ZT 4C (Ø36-48) T20	25	25	150	47	20	36	48	ZTGD. 4C
SM34587	BDAT-LT 2525 ZT 4C (Ø48-70) T20	25	25	150	47	20	48	70	
SM34594	BDAT-LT 2525 ZT 4C (Ø70-110) T20	25	25	150	47	20	70	110	
SM34600	BDAT-LT 2525 ZT 4C (Ø100-150) T20	25	25	150	47	20	100	150	
SM34617	BDAT-LT 2525 ZT 4C (Ø150-200) T20	25	25	150	47	20	150	200	
SM39742	BDAT-LT 2525 ZT 4C (Ø200-350) T20	25	25	150	47	20	200	350	
SM39759	BDAT-LT 2525 ZT 4C (Ø300-500) T20	25	25	150	47	20	300	500	

Descriptions	Master Insert*	Spare Parts	
		Screw	*Allen Key*
2525	ZT.. (3C - 4C)	BKTV M8x1x25-9232	SAK-AA4-9903

L TYPE FACE GROOVING

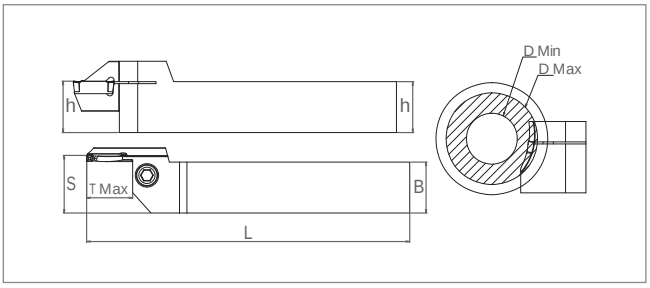

Ordering Code		Item Designation	Dimensions (mm)							Master Insert**
Direction		*A TYPE FACE GROOVING BDAT R/L GRIP*	*h*	*B*	*L*	*S*	*t max*	*øD min*	*øD max*	
Right	*Left*									
SM10505	**SM63020**	BDAT R/**L** 2525 I4C (Ø24-36) T22	25	25	150	26.5	22	24	36	GRIP 4C
SM10468	**SM62856**	BDAT R/**L** 2525 I4C (Ø36-48) T22	25	25	150	26.5	22	36	48	
SM10475	**SM62993**	BDAT R/**L** 2525 I4C (Ø48-70) T22	25	25	150	26.5	22	48	70	
SM10482	**SM63006**	BDAT R/**L** 2525 I4C (Ø70-110) T22	25	25	150	26.5	22	70	110	
SM10499	**SM63013**	BDAT R/**L** 2525 I4C (Ø100-150) T22	25	25	150	26.5	22	100	150	
SM10451	**SM62849**	BDAT R/**L** 2525 I4C (Ø150-200) T22	25	25	150	26.5	22	150	200	
SM39704	**SM63259**	BDAT R/**L** 2525 I4C (Ø200-350) T22	25	25	150	26.5	22	200	350	
SM39711	**SM63266**	BDAT R/**L** 2525 I4C (Ø300-500) T22	25	25	150	26.5	22	300	500	

Descriptions	Master Insert**	Spare Parts	
		Screw	*Allen Key*
2525	GRIP (4C)	BKTV M8x1x25-9232	SAK-AA4-9903

*Suitable Insert brand is ZCC-CT
**Suitable Insert brand is ISC

SMOXH
SMOXH
BIKT/R 25-K3C

Insert			MGM. 1.5C	MGM. 2C	MGM. 3C	MGM. 4C	MGM. 5C	MGM. 5C
Size (mm)			Ø16 - 20	Ø16 - 25	Ø20 - 40	Ø20 - 40	Ø25 - 50	Ø50
Item Code			BIKT R/L	BIKT R/L	BIKT R/L	BIKT R/L	BIKT R/L	BIKT R/L
T Max. (mm)			4-6mm	4-7mm	6-10mm	7-15mm	7-15mm	15mm
Application Type	**Internal Grooving**	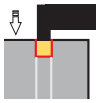	✓	✓	✓	✓	✓	✓
	Page		**D194**	**D194**	**D194**	**D194**	**D194**	**D194**
	Internal Turning	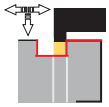	-	-	-	-	-	-
	Page							
	Int. Edge Grooving	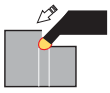	-	-	-	-	-	-
	Page							
	Brand		**KRLY**	**KRLY**	**KRLY**	**KRLY**	**KRLY**	**KRLY**

Insert			MGM. 6C	KGM. 2C	KGM. 3C	KGM. 4C	MRM. 3C	MRM. 4C
Size (mm)			Ø50	Ø20 - 25	Ø25 - 32	Ø25 - 32	Ø25 - 40	Ø25 - 40
Item Code			BIKT R/L	BIKT R/L	BIKT R/L	BIKT R/L	BIRT R/L	BIRT R/L
T Max. (mm)			15mm	6-7mm	7-8mm	7-8mm	3.5mm	3.5mm
Application Type	**Internal Grooving**	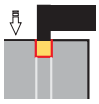	✓	✓	✓	✓	-	-
	Page		**D194**	**D194**	**D194**	**D194**		
	Internal Turning	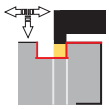	-	✓	✓	✓	-	-
	Page			**D194**	**D194**	**D194**		
	Int. Edge Grooving	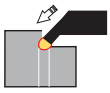	-	-	-	-	✓	✓
	Page						**D195**	**D195**
	Brand		**KRLY**	**KRLY**	**KRLY**	**KRLY**	**KRLY**	**KRLY**

Insert			MRM. 5C	GRIP 3C	GRIP 4C	DGN 3C	GEPI 3C	GEPI 4C	TDC. 2C	TDC. 3C
Size (mm)			Ø32 - 40	Ø16 - 25	Ø25 - 32	Ø20 - 32	Ø10 - 16	Ø10 - 16	Ø20 - 25	Ø20 - 32
Item Code			BIRT R/L	BIKT R/L	BIKT R/L	BIKT R/L	BEKT R/L	BEKT R/L	BIKT R/L	BIKT R/L
T Max. (mm)			3.5mm	4-7mm	7-8mm	6-8mm	2.6mm	2.6-4mm	6-7mm	6-8mm
Application Type	**Internal Grooving**	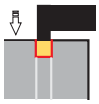	-	✓	✓	✓	✓	✓	✓	✓
	Page			**D196**	**D196**	**D196**	**D196**	**D196**	**D200**	**D200**
	Internal Turning	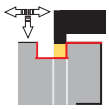	-	-	-	-			-	-
	Page									
	Int. Edge Grooving	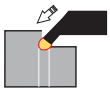	✓	-	-	-			-	-
	Page		**D195**							
	Brand		**KRLY**	**ISCR**	**ISCR**	**ISCR**	**ISCR**	**ISCR**	**TGTC**	**TGTC**

Insert			TDC. 4C	S224 2C	S224 3C	S224 4C	S229 3C	S229 4C
Size (mm)			Ø20 - 32	Ø20 - 25	Ø20 - 32	Ø20 - 32	Ø25 - 50	Ø50
Item Code			BIKT R/L	BIKT R/L	BIKT R/L	BIKT R/L	BIKT R/L	BIKT R/L
T Max. (mm)			6-8mm	6-7mm	7-8mm	7-8mm	7-15mm	15mm
Application Type	**Internal Grooving**	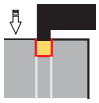	✓	✓	✓	✓	✓	✓
	Page		**D200**	**D199**	**D199**	**D199**	**D199**	**D199**
	Internal Turning	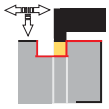	-	-	-		-	-
	Page							
	Int. Edge Grooving	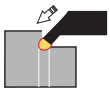	-	-	-	-	-	-
	Page							
	Brand		**TGTC**	**HORN**	**HORN**	**HORN**	**HORN**	**HORN**

Insert			DGM/DTX 2C	DGM/DTX 3C	DGM/DTX 4C	GCM 2C	GCM 3C	GCM 4C
Size (mm)			Ø20 - 25	Ø20 - 25	Ø25	Ø20 - 25	Ø20 - 25	Ø20 - 25
Item Code			BIKT R/L	BIKT R/L	BIKT R/L	BIKT R/L	BIKT R/L	BIKT R/L
T Max. (mm)			6-7mm	6-7mm	7mm	6-7mm	6-7mm	6-7mm
Application Type	**Internal Grooving**	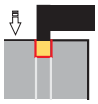	✓	✓	✓	✓	✓	✓
	Page		**D197**	**D197**	**D197**	**D198**	**D198**	**D198**
	Internal Turning	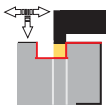	✓	✓	✓	✓	✓	✓
	Page		**D197**	**D197**	**D197**	**D198**	**D198**	**D198**
	Int. Edge Grooving	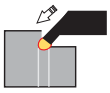						
	Page							
	Brand		**TNGLY**	**TNGLY**	**TNGLY**	**SMTM**	**SMTM**	**SMTM**

Insert			A4 2C	A4 3C	A4 2C	RDT 2C	RDT 3C	RDT 4C
Size (mm)			Ø20 - 25	Ø20 - 25	Ø25	Ø20 - 25	Ø20 - 25	Ø20 - 25
Item Code			BIKT R/L	BIKT R/L	BIKT R/L	BIKT R/L	BIKT R/L	BIKT R/L
T Max. (mm)			6-7mm	6-7mm	7mm	6-7mm	6-7mm	6-7mm
Application Type	**Internal Grooving**	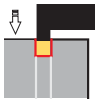	✓	✓	✓	✓	✓	✓
	Page		**D198**	**D198**	**D198**	**D200**	**D200**	**D200**
	Internal Turning	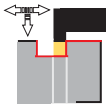	✓	✓	✓	✓	✓	✓
	Page		**D198**	**D198**	**D198**	**D200**	**D200**	**D200**
	Int. Edge Grooving	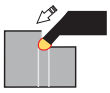						
	Page							
	Brand		**KNMTL**	**KNMTL**	**KNMTL**	**TGTC**	**TGTC**	**TGTC**

Insert			GP 2C	GP 3C	GP 4C	151.2 2C	151.2 3C	151.2 4C	GL2 2C	GL2 3C	GL2 4C
Size (mm)			Ø25	Ø25	Ø25	Ø20 - 25	Ø20 - 25	Ø20 - 25	Ø25-32	Ø25-32	Ø25-32
Item Code			BIKT R/L	BIKT R/L	BIKT R/L	BIKT R/L	BIKT R/L	BIKT R/L	BIKT R/L	BIKT R/L	BIKT R/L
T Max. (mm)			7mm	7mm	7mm	7mm	7mm	7mm	7-8mm	7-8mm	7-8mm
Application Type	**Internal Grooving**	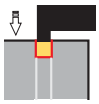	✓	✓	✓	✓	✓	✓	✓	✓	✓
	Page		**D201**	**D201**	**D201**	**D202**	**D202**	**D202**	**D204**	**D204**	**D204**
	Internal Turning	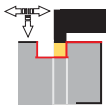	-	-	-	-	-	-	-	-	-
	Page										
	Int. Edge Grooving	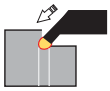									
	Page										
	Brand		**PLBT**	**PLBT**	**PLBT**	**SNDVK**	**SNDVK**	**SNDVK**	**PRMT**	**PRMT**	**PRMT**

Insert			TDP 2C	TDP 3C	TDP 4C	GY2 2C	GY2 3C	GY2 4C
Size (mm)			Ø20 - 25	Ø20 - 25	Ø20 - 25	Ø25	Ø25	Ø25
Item Code			BIKT R/L	BIKT R/L	BIKT R/L	BIKT R/L	BIKT R/L	BIKT R/L
T Max. (mm)			7mm	7mm	7mm	7mm	7mm	7mm
Application Type	**Internal Grooving**	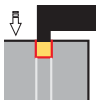	✓	✓	✓	✓	✓	✓
	Page		**D203**	**D203**	**D203**	**D203**	**D203**	**D203**
	Internal Turning	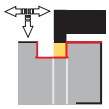	✓	✓	✓	✓	✓	✓
	Page							
	Int. Edge Grooving	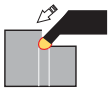						
	Page							
	Brand		**YG-1**	**YG-1**	**YG-1**	**MTSBSH**	**MTSBSH**	**MTSBSH**

Insert			S229 5C	123 2C	123 3C	123 4C	GDM 2C	GDM 3C
Size (mm)			Ø25 - 32	Ø20 - 25	Ø20 - 32	Ø20 - 32	Ø20 - 25	Ø20 - 32
Item Code			BIKT R/L	BIKT R/L	BIKT R/L	BIKT R/L	BIKT R/L	BIKT R/L
T Max. (mm)			7-10mm	6-7mm	6-8mm	6-8mm	6-7mm	6-8mm
Application Type	**Internal Grooving**	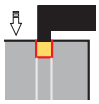	✓	✓	✓	✓	✓	✓
	Page		**D199**	**D202**	**D202**	**D202**	**D201**	**D201**
	Internal Turning	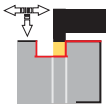	-	-	-	-	-	-
	Page							
	Int. Edge Grooving	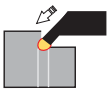	-	-	-	-	-	-
	Page							

Insert			GDM 4C	ZT.D 2C	ZT.D 3C	ZT.D 4C	ZT.D 5C	-
								-
Size (mm)			Ø20 - 32	Ø20	Ø20 - 32	Ø25 - 40	Ø32 - 40	-
Item Code			BIKT R/L	BIKT R/L	BIKT R/L	BIKT R/L	BIKT R/L	-
T Max. (mm)			6-8mm	6mm	6-8mm	7-10mm	8-10mm	-
Application Type	**Internal Grooving**	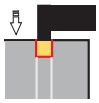	✓	✓	✓	✓	✓	-
	Page		**D201**	**D204**	**D204**	**D204**	**D204**	
	Internal Turning	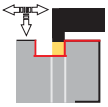	-	-	-	-	-	-
	Page							
	Int. Edge Grooving	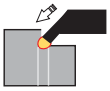	-	-	-	-	-	-
	Page							

Insert			NF..08	NF.11	NF..14	NF..16	MB09 SNDVK	6-7-8-9 GR
Size (mm)			Ø12	Ø16	Ø16	Ø16	Ø16	Ø8 - 16
Item Code			BIKT	BIKT R/L	BIKT R/L	BIKT R/L	BIKT R/L	BIKT R/L
T Max. (mm)			From Insert	From Insert	From Insert	From Insert	From Insert	From Insert
Application Type	**Internal Grooving**	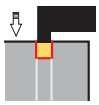	✓	✓	✓	✓	✓	✓
	Page		**D205**	**D205**	**D205**	**D205**	**D205**	**D207**
	Internal Turning	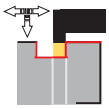	✓	✓	✓	✓	✓	✓
	Page							
	Int. Edge Grooving	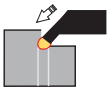	-	-	-	-	-	-
	Page							

INTERNAL GROOVING TOOLS

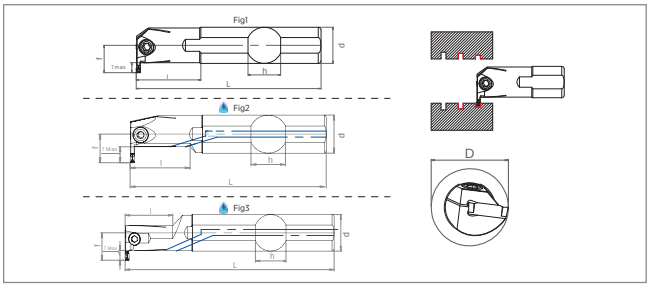

Ordering Code		Item Designation	Dimensions (mm)									Master Insert*
Direction		*BIKT R/L*										
Right	*Left*	*MGM.*		*d*	*D*	*L*	*l*	*h*	*f*	*t max*	*Fig.*	
SM51478	SM51485	BIKT R/L 16 K1.5C T4	-	16	20	150	33	15	11.75	4	1	MGM. 1.5C
SM51522	SM51515	BIKT R/L 20 K1.5C T6	-	20	26	170	33	18	15.75	6	1	
SM11151	SM11298	BIKT R/L 16 K2C T4	-	16	20	150	33	15	11.75	4	1	MGM. 2C
SM11168	SM11304	BIKT R/L 20 K2C T6	-	20	26	170	33	18	15.75	6	1	
SM11175	SM11311	BIKT R/L 25 K2C T7	-	25	32	200	45	23	17.25	7	1	
SM11199	SM11335	BIKT R/L 20 K3C T6	-	20	26	170	33	18	15.75	6	1	MGM. 3C
SM11205	SM11342	BIKT R/L 25 K3C T7	-	25	32	200	45	23	19.25	7	1	
SM59597	SM59641	BEKT R/L 25 K3C T10 D32 IJ	✓	25	32	200	45	23	22.25	10	2	
SM59603	SM59658	BEKT R/L 25 K3C T7 D25 IJ	✓	25	25	200	45	23	19.25	7	3	
SM11182	SM11359	BIKT R/L 32 K3C T8	-	32	40	250	49	30	23.75	8	1	
SM59610	SM59665	BEKT R/L 32 K3C T10 D40 IJ	✓	32	40	250	55	30	25.75	10	2	
SM11212	SM11328	BIKT R/L 40 K3C T10	-	40	50	300	54	37	29.75	10	1	
SM11229	SM11366	BIKT R/L 20 K4C T6	-	20	26	170	33	18	15.75	6	1	MGM. 4C
SM11236	SM11373	BIKT R/L 25 K4C T7	-	25	32	200	45	23	19.25	7	1	
SM59627	SM59672	BEKT R/L 25 K4C T10 D32 IJ	✓	25	32	200	45	23	22.25	10	2	
SM11243	SM11380	BIKT R/L 32 K4C T8	-	32	40	250	49	30	23.75	8	1	
SM59634	SM59689	BEKT R/L 32 K4C T10 D40 IJ	✓	32	40	250	55	30	23.75	10	2	
SM11250	SM11397	BIKT R/L 40 K4C T10	-	40	50	300	54	37	29.75	10	1	
SM25684	SM25646	BIKT R/L 50 K4C T15	-	50	65	350	50	47	39.75	15	1	
SM11267	SM11403	BIKT R/L 25 K5C T7	-	25	32	200	45	23	19.25	7	1	MGM. 5C
SM11274	SM11410	BIKT R/L 32 K5C T8	-	32	40	250	49	30	23.75	8	1	
SM11281	SM11427	BIKT R/L 40 K5C T10	-	40	50	300	54	37	29.75	10	1	
SM25677	SM25639	BIKT R/L 50 K5C T15	-	50	65	350	50	47	39.75	15	1	
SM55599	SM55612	BIKT R/L 32 K6C T8	-	32	40	250	49	30	23.75	8	1	MGM. 6C
SM55605	SM55629	BIKT R/L 40 K6C T10	-	40	50	300	54	37	29.75	10	1	
SM25660	SM25622	BIKT R/L 50 K6C T15	-	50	65	350	50	47	39.75	15	1	
SM55636	SM55643	BIKT R/L 40 K8C T10	-	40	50	300	54	37	29.75	10	1	MGM. 8C
SM25653	SM25615	BIKT R/L 50 K8C T15	-	50	65	350	50	47	39.75	15	1	

Descriptions	Master Insert*	Spare Parts	
		Screw	*Allen Key*
Ø16	MGM.. (1.5C - 2C)	BKTV M4x15-9210	SAK-AA3-9902
Ø20		BKTV M5x17-9211	SAK-AA4-9903
Ø25	MGM.. (2C - 5C)	BKTV M6x21-9214	
Ø32	MGM.. (3C - 6C)	BKTV M8x1x25-9232	
Ø40 - Ø50	MGM.. (3C - 8C)		

*Suitable Insert brand is KRLY

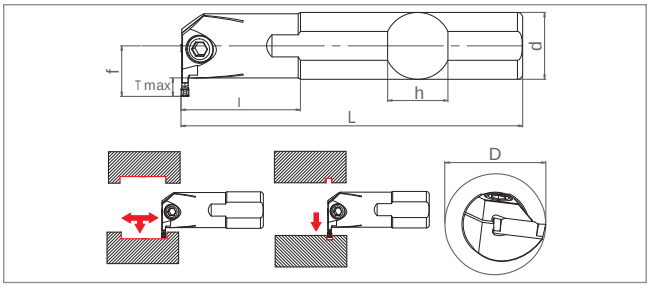

Ordering Code		Item Designation	Dimensions (mm)							Master Insert*
Direction		*BIKT R/L KGM.*	*d*	*D*	*L*	*l*	*h*	*f*	*t max*	
Right	*Left*									
SM25585	SM34754	BIKT R/L 20 KG2C T6	20	26	170	33	18	15.75	6	KGM. 2C
SM25608	SM25578	BIKT R/L 25 KG2C T7	25	32	200	42	23	19.25	7	
SM25592	SM25561	BIKT R/L 25 KG3C T7	25	32	200	42	23	19.25	7	KGM. 3C
SM25547	SM25523	BIKT R/L 32 KG3C T8	32	40	250	49	30	23.75	8	
SM38653	SM25554	BIKT R/L 25 KG4C T7	25	32	200	42	23	19.25	7	KGM. 4C
SM25530	SM25516	BIKT R/L 32 KG4C T8	32	40	250	49	30	23.75	8	

Descriptions	Master Insert*	Spare Parts	
		Screw	*Allen Key*
Ø20	KGM..(2C)	BKTV M5x17-9211	SAK-AA4-9903
Ø25	KGM..(2C - 4C)	BKTV M6x21-9214	
Ø32	KGM..(3C - 4C)	BKTV M8x1x25-9232	

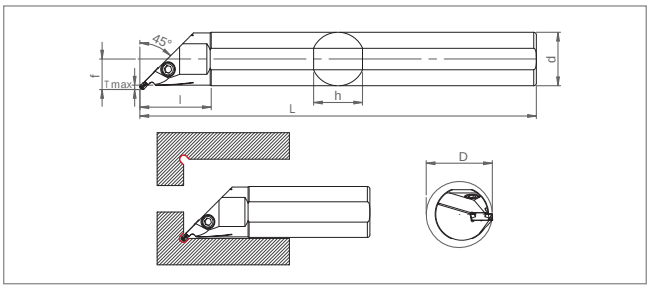

Ordering Code		Item Designation	Dimensions (mm)							Master Insert*
Direction		*BIRT R/L (45) MRMN*	*d*	*D*	*L*	*l*	*h*	*f*	*t max*	
Right	*Left*									
SM48522	SM48539	BIRT R/L 25 KR3C T3.5	25	28.5	200	42	23	15.75	3.5	MR. 3C
SM48560	SM48577	BIRT R/L 32 KR3C T3.5	32	35.5	250	49	30	19.25	3.5	
SM48621	SM48638	BIRT R/L 40 KR3C T3.5	40	50	300	54	37	23.25	3.5	
SM48553	SM48546	BIRT R/L 25 KR4C T3.5	25	28.5	200	42	23	15.75	3.5	MR. 4C
SM48591	SM48584	BIRT R/L 32 KR4C T3.5	32	35.5	250	49	30	19.25	3.5	
SM48652	SM48645	BIRT R/L 40 KR4C T3.5	40	50	300	54	37	23.25	3.5	
SM48607	SM48614	BIRT R/L 32 KR5C T3.5	32	35.5	250	49	30	19.25	3.5	MR. 5C
SM48669	SM48676	BIRT R/L 40 KR5C T3.5	40	50	300	54	37	23.25	3.5	

Descriptions	Master Insert*	Spare Parts	
		Screw	*Allen Key*
Ø25	MR..(3C - 4C)	BKTV M5x17-9211	SAK-AA4-9903
Ø32	MR..(3C - 5C)	BKTV M8x1x25-9232	
Ø40	MR..(3C - 5C)		

*Suitable Insert brand is KRLY

INTERNAL GROOVING TOOLS

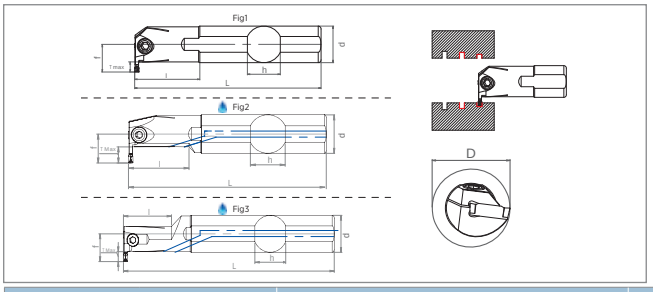

Ordering Code		Item Designation	Dimensions (mm)									Master Insert*
Direction		*BIKT R/L*										
Right	*Left*	*GRIP / DGN / TGMF*		*d*	*D*	*L*	*l*	*h*	*f*	*t max*	*Fig.*	
SM10871	SM25745	BIKT R/L 16 IG3C T4	-	16	26	150	32	18	11.75	4	1	GRIP 3C
SM48768	SM48775	BIKT R/L 20 IG3C T6	-	20	26	170	32	18	15.75	6	1	
SM49031	SM49024	BIKT R/L 25 IG3C T7	-	25	32	200	42	23	19.25	7	1	
SM75757	**SM75801**	**BEKT R/L 25 IG3C T10 D32 IJ**	✓	**25**	**32**	**200**	**45**	**23**	**22.25**	**10**	**2**	
SM75764	**SM75818**	**BEKT R/L 25 IG3C T7 D25 IJ**	✓	**25**	**25**	**200**	**45**	**23**	**19.25**	**7**	**3**	
SM75771	**SM75825**	**BEKT R/L 32 IG3C T10 D40 IJ**	✓	**32**	**40**	**250**	**55**	**30**	**25.75**	**10**	**2**	
SM10918	SM25707	BIKT R/L 25 IG4C T7	-	25	32	200	42	23	19.25	7	1	GRIP 4C
SM10970	SM25691	BIKT R/L 32 IG4C T8	-	32	40	250	42	30	23.75	8	1	
SM75788	**SM75832**	**BEKT R/L 25 IG4C T10 D32 IJ**	✓	**25**	**32**	**200**	**45**	**23**	**22.25**	**10**	**2**	
SM75795	**SM75849**	**BEKT R/L 32 IG4C T10 D32 IJ**	✓	**32**	**40**	**250**	**55**	**30**	**25.75**	**10**	**2**	
SM10888	SM25738	BIKT R/L 20 ID3C T6	-	20	26	170	32	18	15.75	6	1	DGN 3C
SM10895	SM25721	BIKT R/L 25 ID3C T7	-	25	32	200	42	23	19.25	7	1	
SM10901	SM25714	BIKT R/L 32 ID3C T8	-	32	40	250	42	30	23.75	8	1	
SM80034	**SM80041**	**BIKT R/L 16 ITG3C T4**	**-**	**16**	**26**	**150**	**32**	**18**	**11.75**	**4**	**1**	TGMF 3C
SM75856	**SM75887**	**BIKT R/L 20 ITG 3C T6**	**-**	**20**	**26**	**170**	**32**	**18**	**15.75**	**6**	**1**	
SM75863	**SM75894**	**BIKT R/L 25 ITG 3C T7**	**-**	**25**	**32**	**200**	**45**	**23**	**19.25**	**7**	**3**	
SM75870	**SM75900**	**BIKT R/L 25 ITG 4C T7**	**-**	**25**	**32**	**200**	**45**	**23**	**19.25**	**7**	**2**	TGMF 4C

Descriptions	Master Insert*	Spare Parts	
		Screw	*Allen Key*
Ø16	GRIP - DGN - TGMF (3C)	BKTV M4x15-9210	SAK-AA3-9902
Ø20		BKTV M5x17-9211	SAK-AA4-9903
Ø25	GRIP - TGMF (3C - 4C)	BKTV M6x21-9214	
Ø32	GRIP - DGN (3C - 4C)	BKTV M8x1x25-9232	

*Suitable Insert brand is ISC

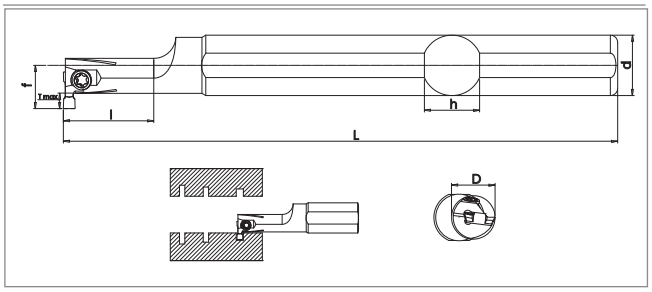

Ordering Code		Item Designation	Dimensions (mm)							Master Insert*
Direction		*BIKT R/L GEPI*	*d*	*D*	*L*	*l*	*h*	*f*	*t max*	
Right	*Left*									
SM60500	SM60562	BEKT R/L 10 GP2C T2.4	10	12.5	125	25	9	7.15	2.4	GEPI 2C
SM60517	SM60579	BEKT R/L 12 GP2C T2.6	12	14	125	25	11	8.35	2.6	
SM60524	SM60586	BEKT R/L 16 GP2C T2.6	16	14	150	30	15	10.35	2.6	
SM60531	SM60593	BEKT R/L 12 GP3C T2.6	12	14	125	25	11	8.35	2.6	GEPI 3C
SM60548	SM60609	BEKT R/L 16 GP3C T2.6	16	14	150	30	15	10.35	2.6	
SM60555	SM60616	BEKT R/L 16 GP3C T4	16	14	150	30	15	11.75	4	

Descriptions	Master Insert*	Spare Parts	
		Screw	*Torx Key*
Ø10	GEPI2	SSV M3.5x8-9510	STK-T15-9910
Ø12 - Ø16		SSV M3.5x10-9511	
Ø10	GEPI3	SSV M3.5x8-9510	
Ø12 - Ø16		SSV M3.5x10-9511	

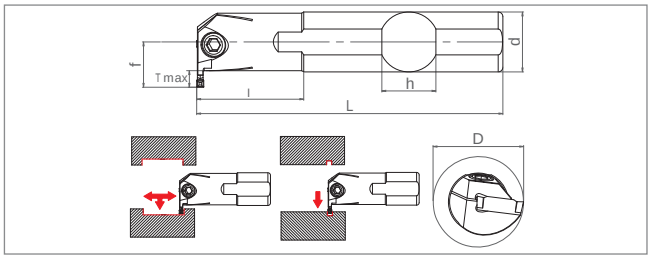

Ordering Code		Item Designation	Dimensions (mm)							Master Insert**
Direction		*BIKT R/L DGM / DTX*	*d*	*D*	*L*	*l*	*h*	*f*	*t max*	
Right	*Left*									
SM75658	SM75702	BIKT R/L 20 DG 2C T6	20	26	170	32	18	15.75	6	DGM / DTX 2C
SM75665	SM75719	BIKT R/L 25 DG 2C T7	25	32	200	45	23	19.25	7	
SM75672	SM75726	BIKT R/L 20 DG 3C T6	20	26	170	32	18	15.75	6	DGM / DTX 3C
SM75689	SM75733	BIKT R/L 25 DG 3C T7	25	32	200	45	23	19.25	7	
SM75696	SM75740	BIKT R/L 25 DG 4C T7	25	32	200	45	23	19.25	7	DGM / DTX 4C

Descriptions	Master Insert**	Spare Parts	
		Screw	*Allen Key*
Ø20	DGM / DTX 2C	BKTV M5x17-9211	SAK-AA4-9903
Ø25	DGM / DTX (2C - 3C)	BKTV M6x21-9214	SAK-AA5-9904

*Suitable Insert brand is ISC
*Suitable Insert brand is TNGLY

INTERNAL GROOVING TOOLS

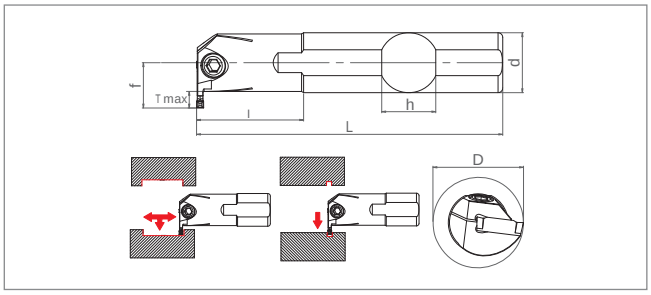

Ordering Code		Item Designation	Dimensions (mm)							Master Insert*
Direction		*BIKT R/L GCM*	*d*	*D*	*L*	*l*	*h*	*f*	*t max*	
Right	*Left*									
SM75436	SM75498	BIKT R/L 20 GCM2C T6	20	26	170	32	18	15.75	6	GCM2C
SM75443	SM75504	BIKT R/L 25 GCM2C T7	25	32	200	45	23	19.25	7	
SM75450	SM75511	BIKT R/L 20 GCM3C T6	20	26	170	32	18	15.75	6	GCM3C
SM75467	SM75528	BIKT R/L 25 GCM3C T7	25	32	200	45	23	19.25	7	
SM75481	SM75542	BIKT R/L 25 GCM4C T7	25	32	200	45	23	19.25	7	GCM4C

Descriptions	Master Insert**	Spare Parts	
		Screw	*Allen Key*
Ø20	GCM (2C - 4C)	BKTV M5x17-9211	SAK-AA4-9903
Ø25		BKTV M6x21-9214	SAK-AA5-9904

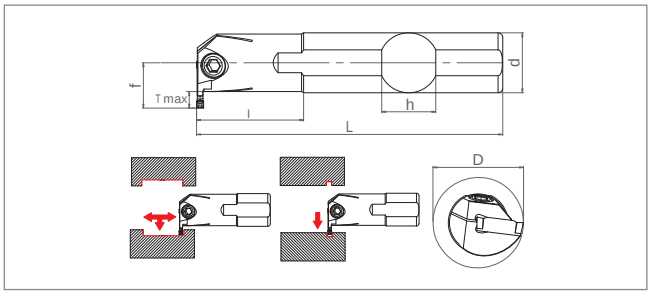

Ordering Code		Item Designation	Dimensions (mm)							Master Insert*
Direction		*BIKT R/L A4*	*d*	*D*	*L*	*l*	*h*	*f*	*t max*	
Right	*Left*									
SM75559	SM75603	BIKT R/L 20 A4 2C T6	20	26	170	32	18	15.75	6	A4 2C
SM75566	SM75610	BIKT R/L 25 A4 2C T7	25	32	200	45	23	19.25	7	
SM75573	SM75627	BIKT R/L 20 A4 3C T6	20	26	170	32	18	15.75	6	A4 3C
SM75580	SM75634	BIKT R/L 25 A4 3C T7	25	32	200	45	23	19.25	7	
SM75597	SM75641	BIKT R/L 25 A4 4C T7	25	32	200	45	23	19.5	7	A4 4C

Descriptions	Master Insert**	Spare Parts	
		Screw	*Allen Key*
Ø20	A4 (2C - 4C)	BKTV M5x17-9211	SAK-AA4-9903
Ø25		BKTV M6x21-9214	SAK-AA5-9904

*Suitable Insert brand is SMTM
**Suitable Insert brand is KNMTL

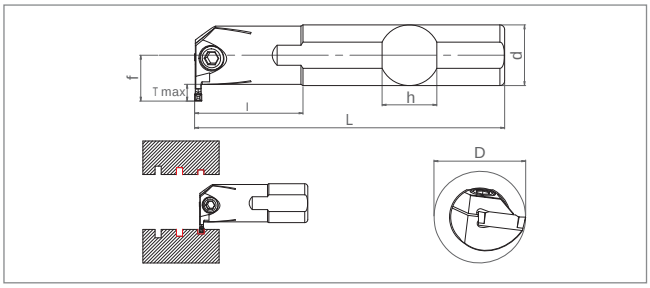

Ordering Code		Item Designation	Dimensions (mm)							Master Insert*
Direction		*BIKT R/L*								
Right	*Left*	*S224 / S229*	*d*	*D*	*L*	*l*	*h*	*f*	*t max*	
SM10994	SM11076	BIKT R/L 20 S224 2C T6	20	26	170	32	18	15.75	6	S224 2C
SM11007	SM11083	BIKT R/L 25 S224 2C T7	25	32	200	42	23	19.25	7	
SM11014	SM11090	BIKT R/L 20 S224 3C T6	20	26	170	33	18	15.75	6	S224 3C
SM11021	SM11106	BIKT R/L 25 S224 3C T7	25	32	200	43	23	19.25	7	
SM11038	SM11113	BIKT R/L 32 S224 3C T8	32	40	250	50	30	23.75	8	
SM11045	SM11120	BIKT R/L 20 S224 4C T6	20	26	170	34	18	15.75	6	S224 4C
SM11052	SM11137	BIKT R/L 25 S224 4C T7	25	32	200	40	23	19.25	7	
SM11069	SM11144	BIKT R/L 32 S224 4C T8	32	40	250	50	30	23.75	8	
SM10697	SM10789	BIKT R/L 25 S229 3C T7	25	32	200	43	23	19.25	7	S229 3C
SM10703	SM10796	BIKT R/L 32 S229 3C T8	32	40	250	65	30	23.75	8	
SM10710	SM10802	BIKT R/L 40 S229 3C T10	40	50	300	50	37	29.75	10	
SM10727	SM10819	BIKT R/L 25 S229 4C T7	25	31	200	40	23	19.25	7	S229 4C
SM10734	SM10826	BIKT R/L 32 S229 4C T8	32	37	250	65	30	23.75	8	
SM10741	SM10833	BIKT R/L 40 S229 4C T10	40	50	300	50	37	29.75	10	
SM10758	SM10840	BIKT R/L 25 S229 5C T7	25	32	200	45	23	19.25	7	S229 5C
SM10765	SM10857	BIKT R/L 32 S229 5C T8	32	40	250	50	30	23.75	8	
SM10772	SM10864	BIKT R/L 40 S229 5C T10	40	50	300	70	37	29.75	10	

Descriptions	Master Insert*	Spare Parts	
		Screw	*Allen Key*
Ø20	S224 - S229 (2C - 4C)	BKTV M5x17-9211	SAK-AA4-9903
Ø25	S224 - S229 (2C - 5C)	BKTV M6x21-9214	
Ø32	S224 - S229 (3C - 5C)	BKTV M8x1x25-9232	
Ø40	S229 (3C - 5C)		

*Suitable Insert brand is HRN

INTERNAL GROOVING TOOLS

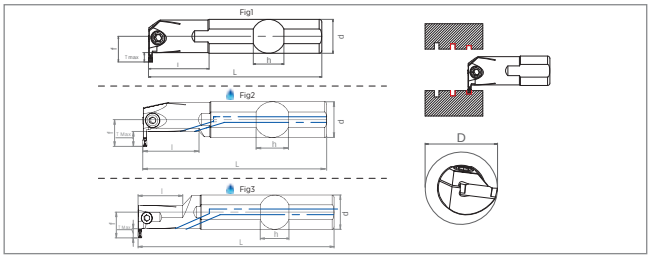

Ordering Code		Item Designation	Dimensions (mm)									Master Insert*
Direction		BIKT R/L TDC		d	D	L	l	h	f	t max	Fig.	
Right	Left											
SM45125	SM45187	BIKT R/L 20 T2C T6	-	20	26	170	33	18	15.75	6	1	TDC 2C
SM45132	SM45194	BIKT R/L 25 T2C T7	-	25	32	200	45	23	19.25	7	1	
SM45149	SM45200	BIKT R/L 20 T3C T6	-	20	26	170	33	18	15.75	6	1	TDC 3C
SM45156	SM45217	BIKT R/L 25 T3C T7	-	25	32	200	45	23	19.25	7	1	
SM59696	SM59733	BEKT R/L 25 T3C T7 D25 IJ	✓	25	25	200	45	23	19.5	7	3	
SM48683	SM48690	BIKT R/L 32 T3C T8	-	32	40	250	49	30	23.75	8	1	
SM59702	SM59740	BEKT R/L 32 T3C T8 D32 IJ	✓	32	32	250	55	30	23.75	8	3	
SM48744	SM48751	BIKT R/L 20 T4C T6	-	20	26	170	33	18	15.75	6	1	TDC 4C
SM48720	SM48737	BIKT R/L 25 T4C T7	-	25	32	200	45	23	19.25	7	1	
SM59719	SM59757	BEKT R/L 25 T4C T7 D25 IJ	✓	25	25	200	45	23	19.25	7	3	
SM48713	SM48706	BIKT R/L 32 T4C T8	-	32	40	250	49	30	23.75	8	1	
SM59726	SM59764	BEKT R/L 32 T4C T8 D32 IJ	✓	32	32	250	55	30	23.75	8	3	

Descriptions	Master Insert*	Spare Parts	
		Screw	Allen Key
Ø16	TDC (2C - 4C)	BKTV M4x15-9210	SAK-AA3-9902
Ø20		BKTV M5x17-9211	SAK-AA4-9903
Ø25		BKTV M6x21-9214	
Ø25 (D25)		BKTV M5x17-9211	
Ø32	TDC (3C - 4C)	BKTV M8x1x25-9232	

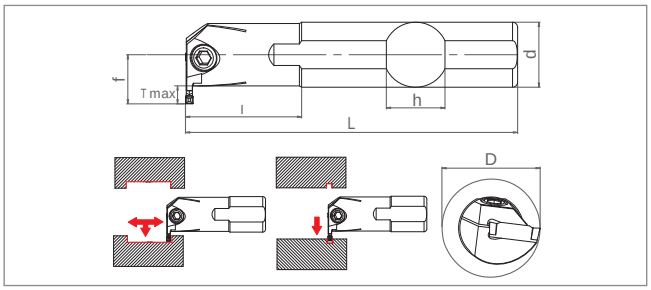

Ordering Code		Item Designation	Dimensions (mm)							Master Insert*
Direction		BIKT R/L RDT	d	D	L	l	h	f	t max	
Right	Left									
SM75313	SM75375	BIKT R/L 20 RD2C T6	20	26	170	32	18	15.75	6	RDT 2C
SM75320	SM75382	BIKT R/L 25 RD2C T7	25	32	200	45	23	19.25	7	
SM75337	SM75399	BIKT R/L 20 RD3C T6	20	26	170	32	18	15.75	6	RDT 3C
SM75344	SM75405	BIKT R/L 25 RD3C T7	25	32	200	45	23	19.25	7	
SM75351	SM75412	BIKT R/L 20 RD4C T6	20	26	170	32	18	15.75	6	RDT 4C
SM75368	SM75429	BIKT R/L 25 RD4C T7	25	32	200	45	23	19.25	7	

Descriptions	Master Insert*	Spare Parts	
		Screw	Allen Key
Ø20	RDT (2C - 4C)	BKTV M5x17-9211	SAK-AA4-9903
Ø25		BKTV M6x21-9214	SAK-AA5-9904

*Suitable Insert brand is TGTC

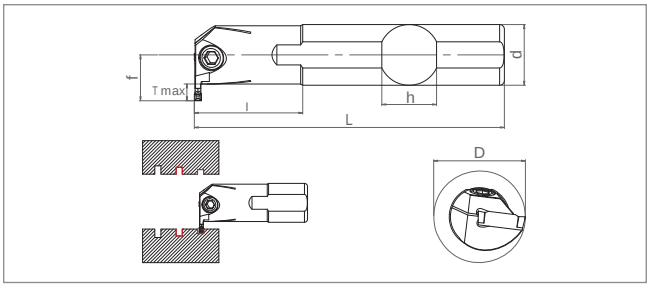

Ordering Code		Item Designation	Dimensions (mm)							Master Insert*
Direction		*BIKT R/L GDM*								
Right	*Left*		*d*	*D*	*L*	*l*	*h*	*f*	*t max*	
SM55810	SM55896	BIKT R/L 20 KYC2C T6	20	26	170	32	18	15.75	6	GDM 2020-2C
SM55827	SM55902	BIKT R/L 25 KYC2C T7	25	32	200	42	23	19.25	7	
SM55834	SM55919	BIKT R/L 20 KYC3C T6	20	26	170	32	18	15.75	6	GDM 3020-3C
SM55841	SM55926	BIKT R/L 25 KYC3C T7	25	32	200	42	23	19.25	7	
SM55858	SM55933	BIKT R/L 32 KYC3C T8	32	40	250	49	30	23.75	8	
SM55865	SM55940	BIKT R/L 20 KYC4C T6	20	26	170	32	18	15.75	6	GDM 4020-4C
SM55872	SM55957	BIKT R/L 25 KYC4C T7	25	32	200	42	23	19.25	7	
SM55889	SM55964	BIKT R/L 32 KYC4C T8	32	40	250	49	30	23.75	8	

Descriptions	Master Insert*	Spare Parts	
		Screw	*Allen Key*
Ø20	GDM (2C - 4C)	BKTV M5x17-9211	SAK-AA4-9903
Ø25		BKTV M6x21-9214	SAK-AA5-9904
Ø32	GDM (3C - 4C)	BKTV M8x1x25-9232	

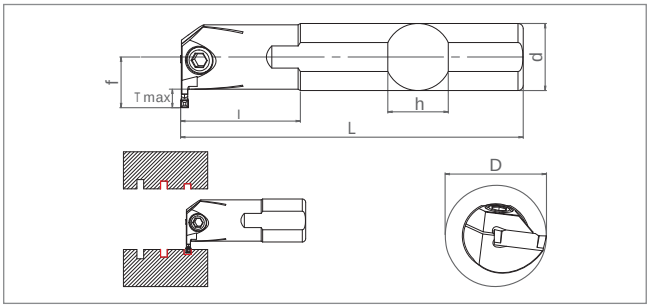

Ordering Code		Item Designation	Dimensions (mm)							Master Insert**
Direction		*BIKT R/L GP*								
Right	*Left*		*d*	*D*	*L*	*l*	*h*	*f*	*t max*	
SM75252	SM75283	BIKT R/L 25 GP2C T7	25	32	200	45	23	19.25	7	GP2C
SM75269	SM75290	BIKT R/L 25 GP3C T7	25	32	200	45	23	19.25	7	GP3C
SM75276	SM75306	BIKT R/L 25 GP4C T7	25	32	200	45	23	19.25	7	GP4C

Descriptions	Master Insert**	Spare Parts	
		Screw	*Allen Key*
Ø25	GP2(2C -3C - 4C)	BKTV M6x21-9214	SAK-AA5-9904

*Suitable Insert brand is KYC
**Suitable Insert brand is PLBT

INTERNAL GROOVING TOOLS

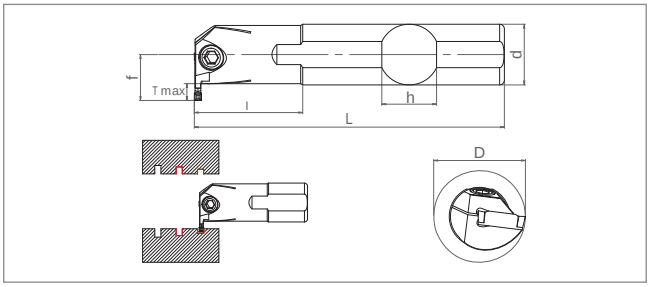

Ordering Code		Item Designation	Dimensions (mm)							Master Insert**
Direction		*BIKT R/L*								
Right	*Left*	*123*	*d*	*D*	*L*	*l*	*h*	*f*	*t max*	
SM55650	SM55735	BIKT R/L 20 123 2C T6	20	26	170	32	18	15.75	6	123-2C
SM55667	SM55742	BIKT R/L 25 123 2C T7	25	32	200	42	23	19.25	7	
SM55674	SM55759	BIKT R/L 20 123 3C T6	20	26	170	32	18	15.75	6	123-3C
SM55681	SM55766	BIKT R/L 25 123 3C T7	25	32	200	42	23	19.25	7	
SM55698	SM55773	BIKT R/L 32 123 3C T8	32	40	250	49	30	23.75	8	
SM55711	SM55797	BIKT R/L 25 123 4C T7	25	32	200	42	23	19.25	7	123-4C
SM55728	SM55803	BIKT R/L 32 123 4C T8	32	40	250	49	30	23.75	8	

Descriptions	Master Insert**	Spare Parts	
		Screw	*Allen Key*
Ø20	123 (2C - 4C)	BKTV M5x17-9211	SAK-AA4-9903
Ø25		BKTV M6x21-9214	SAK-AA5-9904
Ø32	123 (3C - 4C)	BKTV M8x1x25-9232	

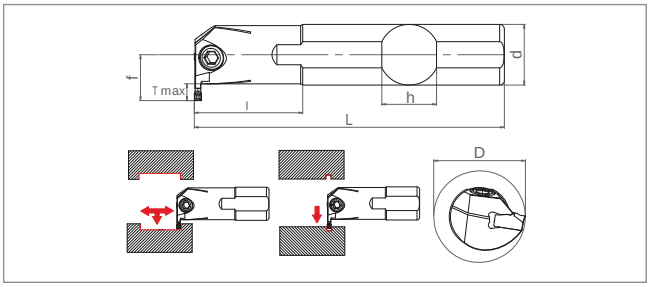

Ordering Code		Item Designation	Dimensions (mm)							Master Insert**
Direction		*BIKT R/L*								
Right	*Left*	*151.2*	*d*	*D*	*L*	*l*	*h*	*f*	*t max*	
SM75917	SM75979	BIKT R/L 20 151.2 2C T6	20	26	170	32	18	15.75	6	151.2-2C
SM75924	SM75986	BIKT R/L 25 151.2 2C T7	25	32	200	45	23	19.25	7	
SM75931	SM75993	BIKT R/L 20 151.2 3C T6	20	26	170	32	18	15.75	6	151.2-3C
SM75948	SM76006	BIKT R/L 25 151.2 3C T7	25	32	200	45	23	19.25	7	
SM75955	SM76013	BIKT R/L 20 151.2 4C T6	20	26	170	32	18	15.75	6	151.2-4C
SM75962	SM76020	BIKT R/L 25 151.2 4C T7	25	32	200	45	23	19.25	7	

Descriptions	Master Insert**	Spare Parts	
		Screw	*Allen Key*
Ø20	151.2 (2C - 4C)	BKTV M5x17-9211	SAK-AA4-9903
Ø25		BKTV M6x21-9214	SAK-AA5-9904

*Suitable Insert brand is SNDVK

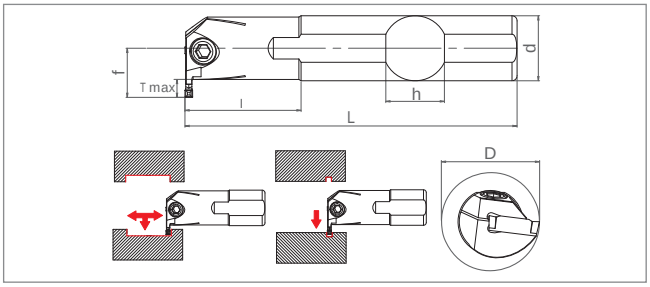

Ordering Code		Item Designation	Dimensions (mm)							Master Insert*
Direction		*BIKT R/L*								
Right	*Left*	*TDP*	*d*	*D*	*L*	*l*	*h*	*f*	*t max*	
SM66816	SM66823	BIKT R/L 20 YG2C T6	20	26	170	32	18	15.75	6	TDP2002
SM66830	SM66847	BIKT R/L 25 YG2C T7	25	32	200	45	23	19.25	7	
SM66854	SM66861	BIKT R/L 20 YG3C T6	20	26	170	32	18	15.75	6	TDP3002
SM66878	SM66885	BIKT R/L 25 YG3C T7	25	32	200	45	23	19.25	7	
SM66892	SM66908	BIKT R/L 20 YG4C T6	20	26	170	32	18	15.75	6	TDP4002
SM66915	SM66922	BIKT R/L 25 YG4C T7	25	32	200	45	23	19.25	7	

Descriptions	Master Insert*	Spare Parts	
		Screw	*Allen Key*
Ø20	TDP(2C - 4C)	BKTV M5x17-9211	SAK-AA4-9903
Ø25		BKTV M6x21-9214	SAK-AA5-9904

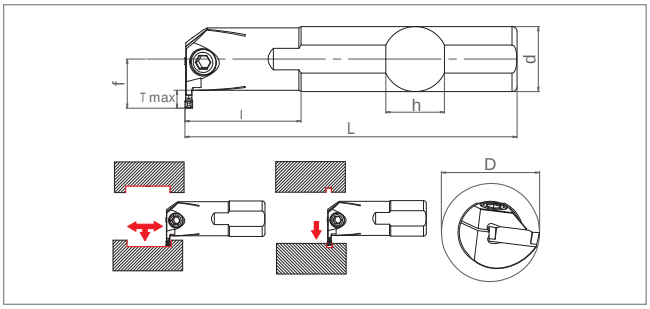

Ordering Code		Item Designation	Dimensions (mm)							Master Insert**
Direction		*BIKT R/L*								
Right	*Left*	*GY2*	*d*	*D*	*L*	*l*	*h*	*f*	*t max*	
SM75191	SM75221	BIKT R/L 25 GY2 2C T7	25	32	200	45	23	19.25	7	GY2-0200
SM75207	SM75238	BIKT R/L 25 GY2 3C T7	25	32	200	45	23	19.25	7	GY2-0300
SM75214	SM75245	BIKT R/L 25 GY2 4C T7	25	32	200	45	23	19.25	7	GY2-0400

Descriptions	Master Insert**	Spare Parts	
		Screw	*Allen Key*
Ø25	GY2(2C -3C - 4C)	BKTV M6x21-9214	SAK-AA5-9904

*Suitable Insert brand is YG
**Suitable Insert brand is MTSBSH

INTERNAL GROOVING TOOLS

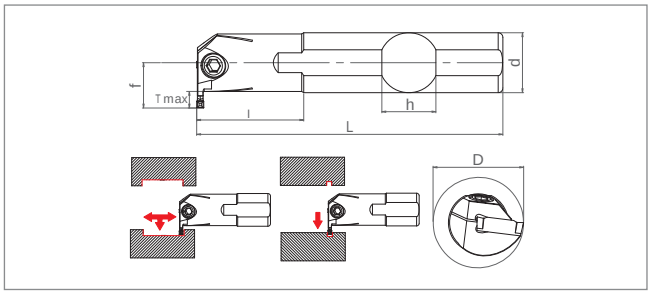

Ordering Code		Item Designation	Dimensions (mm)							Master Insert*
Direction		*BIKT R/L GL2 / GL3 / GL4*	*d*	*D*	*L*	*l*	*h*	*f*	*t max*	
Right	*Left*									
SM77096	SM77157	BIKT R/L 25 GL2C T7	25	32	200	45	23	19.25	7	GL2-D200
SM77102	SM77164	BIKT R/L 32 GL2C T8	32	40	250	49	30	23.75	8	
SM77119	SM77171	BIKT R/L 25 GL3C T7	25	32	200	45	23	19.25	7	GL3-D300
SM77126	SM77188	BIKT R/L 32 GL3C T8	32	40	250	49	30	23.75	8	
SM77133	SM77195	BIKT R/L 25 GL4C T7	25	32	200	45	23	19.25	7	GL3-D400
SM77140	SM77201	BIKT R/L 32 GL4C T8	32	40	250	49	30	23.75	8	

Descriptions	Master Insert*	Spare Parts	
		Screw	*Allen Key*
Ø25	GL (2C - 4C)	BKTV M6x21-9214	SAK-AA4-9903

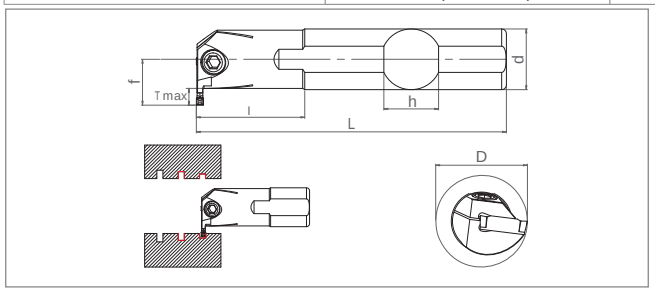

Ordering Code		Item Designation	Dimensions (mm)							Master Insert**
Direction		*BIKT R/L ZT..*	*d*	*D*	*L*	*l*	*h*	*f*	*t max*	
Right	*Left*									
SM55971	SM55988	BIKT R/L 16 ZCC2 2C T4	16	26	150	33	15	11.75	4	ZT.D 2C
SM11434	SM24700	BIKT R/L 20 ZCC2 2C T6	20	26	170	32	18	15.75	6	
SM20764	SM11502	BIKT R/L 20 ZCC2 3C T6	20	26	170	32	18	15.75	6	ZT.D 3C
SM11441	SM11519	BIKT R/L 25 ZCC2 3C T7	25	32	200	42	23	19.25	7	
SM11458	SM11526	BIKT R/L 32 ZCC2 3C T8	32	40	250	42	30	23.75	8	
SM11465	SM11533	BIKT R/L 25 ZCC2 4C T7	25	32	200	42	23	19.25	7	ZT.D 4C
SM11472	SM11540	BIKT R/L 32 ZCC2 4C T8	32	40	250	42	30	23.75	8	
SM25509	SM25493	BIKT R/L 40 ZCC2 4C T10	40	48	300	53	37	29.75	10	
SM11489	SM11557	BIKT R/L 32 ZCC2 5C T8	32	40	250	42	30	23.75	8	ZT.D 5C
SM11496	SM11564	BIKT R/L 40 ZCC2 5C T10	40	50	300	53	37	29.75	10	

Descriptions	Master Insert**	Spare Parts	
		Screw	*Allen Key*
Ø20	ZT.. (2C - 3C)	BKTV M5x17-9211	SAK-AA4-9903
Ø25	ZT.. (3C - 4C)	BKTV M6x21-9214	
Ø32	ZT.. (3C - 5C)	BKTV M8x1x25-9232	
Ø40	ZT.. (4C - 5C)		

*Suitable Insert brand is PRMT
**Suitable Insert brand is ZCC-CT

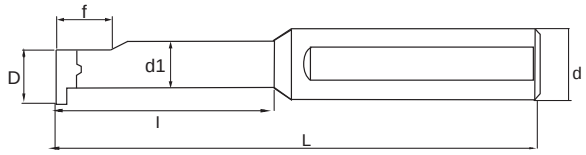

Ordering Code	Item Designation	Dimensions (mm)							Master Insert*
Direction	*BIKT NF..08-11-14-16*		*D*	*d1*	*d*	*f*	*L*	*l*	
SM24458	BIKT NF08 A12 L80 I20-H	✓	8	6	12	4.5	80	24	NFTG08
SM24441	BIKT NF11 A16 L95 I25-H	✓	11	8	12	6.7	95	33	NFTG11
SM24465	BIKT NF14 A16 L110 I30-H	✓	15	11	16	8	110	42	NFTG14
SM49048	BIKT NF16 A16 L130 I30-H	✓	16	11	16	10.2	130	48	NFTG16

Descriptions	Master Insert*	Spare Parts	
		Screw	*Torx Key*
NF08	NFTG08	SSV M2.5x7-9506	STK-T08-9908
NF11	NFTG11	SSV M3.5x8.5-SC-9510	STK-T15-9910
NF14	NFTG14	SSV M4x12-9515	
NF16	NFTG16	SSV M5x13-9519	STK-T20-9911

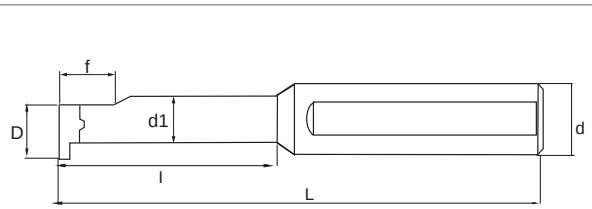

Ordering Code	Item Designation	Dimensions (mm)							Master Insert**
Direction	*BIKT MB09*		*D*	*d1*	*d*	*f*	*L*	*l*	
SM52109	BIKT MB09 A16 L110 I25-H	✓	15	11	16	9	110	27	MB09
SM52116	BIKT MB09 A16 L120 I30-H	✓	15	11	16	9	120	36	
SM52123	BIKT MB09 A16 L130 I40-H	✓	15	11	16	9	130	45	

Descriptions	Master Insert**	Spare Parts	
		Screw	*Torx Key*
MB09	MB09	SSV M4x10-9514	STK-T15-9910

*Suitable Insert brand is KRLY
**Suitable Insert brand is SNDVK

INTERNAL GROOVING TOOLS

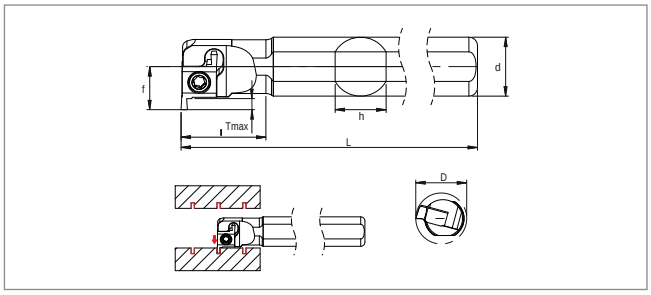

Ordering Code		Item Designation	Dimensions (mm)							Master Insert*
Direction		*BIKT R/L GR6 / GR7 / GR8 / GR9*	*d*	*D*	*L*	*l*	*h*	*f*	*t max*	
Right	*Left*									
SM62825	SM78086	BIKT R/L 08 6GR	8	8.5	100	18	7	4.7	1.5	6GR
SM62818	SM78093	BIKT R/L 10 7GR	10	12.5	125	25	9	6.8	1.5	7GR
SM62795	SM78116	BIKT R/L 12 7GR	12	15.5	150	20	11	8.6	1.5	
SM62801	SM78109	BIKT R/L 10 8GR	10	13.5	125	15	9	7.6	2	8GR
SM62788	SM78123	BIKT R/L 12 8GR	12	15.5	150	20	11	8.6	2	
SM62771	SM78130	BIKT R/L 16 9GR	16	20	200	20	15	11.6	3	9GR

Descriptions	Master Insert**	Spare Parts	
		Screw	*Torx Key*
08	6GR	SSV M2x4-9521	STK-T06-9906
10 - 12	7GR	SSV M2.2x6-9549	
	8GR		
16	9GR	SSV M2.5x7-9506	STK-T08-9908

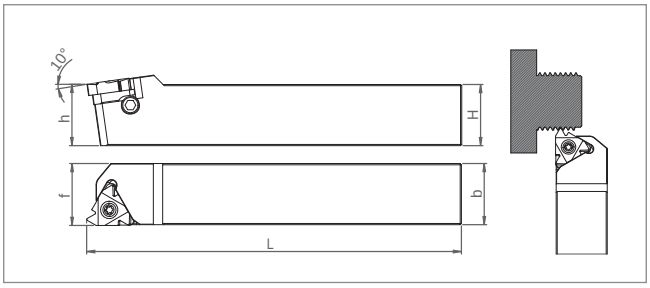

Ordering Code		Item Designation	Dimensions (mm)				Master Insert*
Direction		*TER / L*	*h=H*	*b*	*L*	*f*	
Right	*Left*						
SM34815	SM34808	TER/L 1616 H16	16	16	100	16	16 ER/EL ISO
SM29828	SM29835	TER/L 2020 K16	20	20	125	20	
SM29842	SM29859	TER/L 2525 M16	25	25	150	25	
SM34822	SM34839	TER/L 3232 P16	32	32	170	32	
SM34846	SM34853	TER/L 2525 M22	25	25	150	25	22 ER/EL ISO
SM34860	SM34877	TER/L 3232 P22	32	32	170	32	
SM34891	SM34884	TER/L 4040 S22	40	40	250	40	
SM50662	SM50679	TER/L 3232 P27	32	32	170	32	27 ER/EL ISO
SM50686	SM50693	TER/L 4040 S27	40	40	250	40	

Size Designation	Master Insert*	Spare Parts						
		Screw	Shim	Shim Screw	Torx Key	*Clamp*	*Clamp Screw*	*Torx Key*
1616	16 ER/EL	SSV M3.5x12-9526	BAX TER-16-9625	TASV3 M3x8-9254	STK-T15 9910	PSK2 9126	SSV M3.5x11 9532	STK-T15 9910
2020 - 3232		SSV M3.5x14-9512	BAX TEL-16-9626	TASV1 M3x9-9220				
2525 - 4040	22 ER/EL	SSV M4x14-9516	BAX TER-22-9627 BAX TEL-22-9628	TASV2 M4x12-9221				
3232 - 4040	27 ER/EL	SSV M5x18-9530	BAX TER-27-9630 BAX TEL-27-9631		STK-T20 9911			

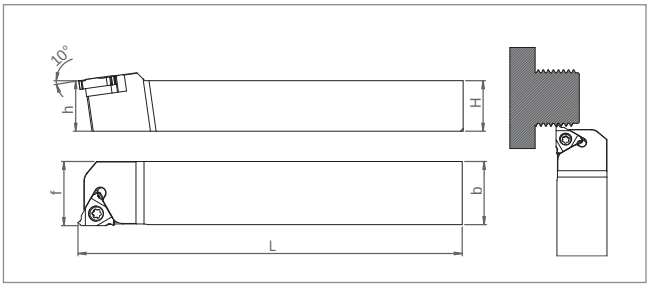

Ordering Code		Item Designation	Dimensions (mm)					Master Insert*
Direction		SER / L		h=H	b	L	f	
Right	Left							
SM57968	SM57975	SER/L 2525 M16-JT	✓	25	25	150	25	16 ER/EL ISO (0.35-3)

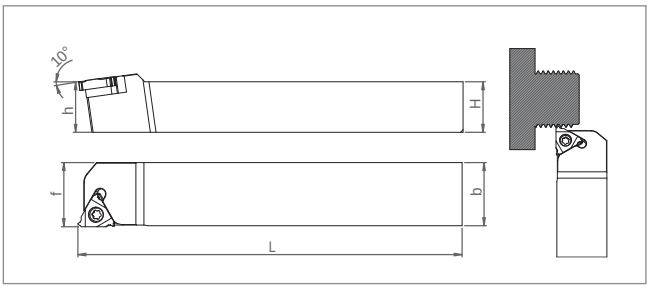

Ordering Code		Item Designation	Dimensions (mm)					Master Insert*
Direction		SER / L		h=H	b	L	f	
Right	Left							
SM11618	SM11625	SER/L 0808 E11	-	08	08	70	10	11 ER/EL ISO
SM11571	SM11588	SER/L 1010 E11	-	10	10	70	10	
SM11632	SM11649	SER/L 1212 F11	-	12	12	80	12	
SM11595	SM11601	SER/L 1616 H11	-	16	16	100	16	
SM11700	SM11717	SER/L 1616 H16	-	16	16	100	16	16 ER/EL ISO (0.35-3)
SM11656	SM11663	SER/L 2020 K16	-	20	20	125	20	
SM11670	SM11687	SER/L 2525 M16	-	25	25	150	25	
SM11724	SM11694	SER/L 3232 P16	-	32	32	170	32	
SM56923	SM56930	SETR/L 2525 M16 (Trapezoidal)	-	25	25	150	25	16 ER/EL (Trapezoidal) (1.5-3)
SM57135	SM57142	SETR/L 3232 P16 (Trapezoidal)	-	32	32	170	32	
SM50709	SM50716	SER/L 2020 K22	-	20	20	125	20	22 ER/EL ISO (3.5-4.5)
SM11731	SM11755	SER/L 2525 M22	-	25	25	150	25	
SM11762	SM11748	SER/L 3232 P22	-	32	32	170	32	
SM11779	SM11786	SER/L 4040 S22	-	40	40	250	40	
SM56947	SM56954	SETR/L 2525 M22 (Trapezoidal)	-	25	25	150	25	22 ER/EL (Trapezoidal) (4-6)
SM57098	SM57111	SETR/L 3232 P22 (Trapezoidal)	-	32	32	170	32	
SM57104	SM57128	SETR/L 4040 S22 (Trapezoidal)	-	40	40	250	40	

*Suitable Insert brand is ISO

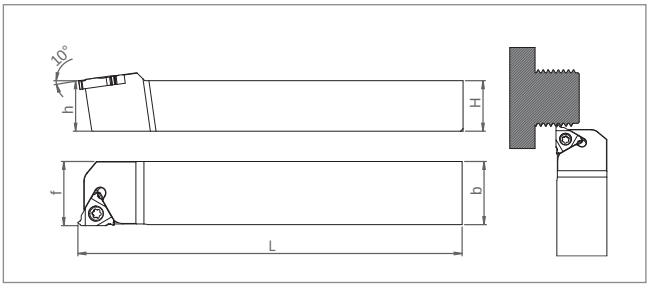

Ordering Code		Item Designation	Dimensions (mm)				Master Insert*
Direction		*SER / L K.O SWISS TYPE*	*h=H*	*b*	*L*	*f*	
Right	*Left*						
SM59504	SM59535	SER/L 1010 K11 K.O	10	10	125	10	11 ER/EL ISO
SM59511	SM59542	SER/L 1212 K11 K.O	12	12	125	12	
SM59528	SM59559	SER/L 1616 K11 K.O	16	16	125	16	

Size Designation	Master Insert*	Spare Parts						
		Screw	Shim	Shim Screw	Torx Key	*Clamp*	*Clamp Screw*	*Torx Key*
0808 - 1616	11 ER/EL	SSV M2.5x6-9505	-	-	STK-T08 9908	-	-	-
1616	16 ER/EL (0.35-3)	SSV M3.5x12-9526	BAX ER/L 16-9623	SBV5 M5.05-A3.5x9-9408	STK-T15-9910	PSK2 9126	SSV M3.5x11 9532	STK-T15 9910
2020 - 3232		SSV M3.5x14-9512		SBV M5.05 A3.5x11-9407				
2525 - 3232 (Trapezoidal)	16 ER/EL-TR (1.5-3)	SSV M3.5x14-9512	-	-				
2020 - 4040	22 ER/EL (3.5-4.5)	SSV M4x14-9516	BAX ER/L-22-9624	SBV1 M6x0.75 A4x13-9409				
2525 -4040 (Trapezoidal)	22 ER/EL-TR (4-6)	SSV M4x14-9516	-	-				

*Suitable Insert brand is ISO

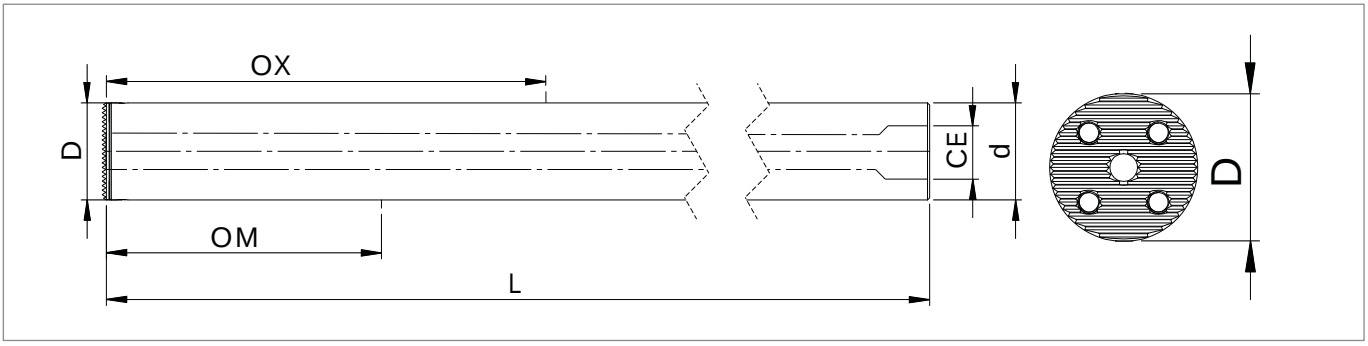

Ordering Code	Item Designation	Dimensions (mm)						
	SAVT	*D*	*d*	*L*	*OM*	*OX*	*CE*	*D Min*
SM78215	SAVT D25 256 7D-H	25	25	256	88	155	G4/1	32
SM78222	SAVT D25 331 10D-H	25	25	331	155	230	G4/1	32
SM78239	SAVT D32 321 7D-H	32	32	321	110	192	G8/3	40
SM78246	SAVT D32 417 10D-H	32	32	417	192	288	G8/3	40
SM78253	SAVT D40 409 7D-H	40	40	409	128	248	G2/1	50
SM78260	SAVT D40 530 10D-H	40	40	530	248	368	G2/1	50

Size Designation	Spare Parts	
	Screw	*Allen Key*
SAVT D25 256 7D-H	BKTV M4x15-9210	SAK-AA3-9902
SAVT D25 331 10D-H		
SAVT D32 321 7D-H	BKTV M5x17-9211	SAK-AA4-9903
SAVT D32 417 10D-H		
SAVT D40 409 7D-H	BKTV M6x21-9214	SAK-AA5-9904
SAVT D40 530 10D-H		

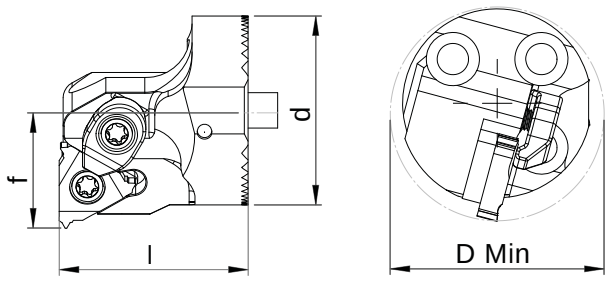

Ordering Code		Item Designation	Dimensions (mm)						Master Insert*
Direction		*SAVK A-SIR/L*		*d*	*l*	*f*	*D min*	*Holder*	
Right	*Left*								
SM78758	SM78789	SAVK A25 SIR/L-16	✓	25	25	17	≥32	SAVT D25	16 IR/IL-ISO (0.35-3)
SM78765	SM78796	SAVK A32-SIR/L-16	✓	32	32	22	≥40	SAVT D32	
SM78772	SM78802	SAVK A40-SIR/L-16	✓	40	32	27	≥50	SAVT D40 / 50 / 60	

Descriptions	Master Insert*	Spare Parts						
		Screw	*Shim*	*Shim Screw*	*Torx Key*	*Clamp*	*Clamp Screw*	*Torx Key*
SAVK A25	16 IR/IL-ISO (0.35-3)	SSV M3.5x10 9511	BAX ER/L-16-9623	SBV5 M5.05-A3.5x9-9408	STK-T15 9910	PSK2 9126	SSV M3.5x11 9532	STK-T15 9910
SAVK A32		SSV M3.5x12 9526						
SAVK A40		SSV M3.5x14 9512		SBV5 M5.05-A3.5x11-9407				

*Suitable Insert brand is ISO

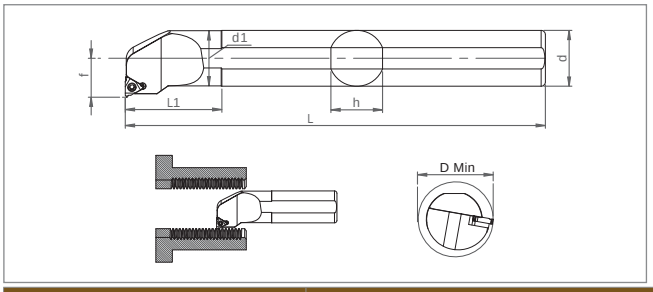

Ordering Code		Item Designation	Dimensions (mm)								Master Insert*
Direction		SIR/L		d	d1	h	L	f	L1	D min	
Right	Left										
SM76761	**SM76822**	**A12K SIR/L-11-JB**	✓	**12**	**12**	**11**	**125**	**10**	**-**	**16**	11 IR/IL ISO
SM76778	**SM76839**	**A16M SIR/L-16-JB**	✓	**16**	**13**	**15**	**150**	**11**	**-**	**19**	16 IR/IL ISO (0.35-3)
SM76785	**SM76846**	**A20P SIR/L-16-JB**	✓	**20**	**20**	**18**	**170**	**12.5**	**-**	**24**	
SM76792	**SM76853**	**A25R SIR/L-16-JB**	✓	**25**	**25**	**23**	**200**	**12.5**	**-**	**30**	
SM72213	**SM72220**	**A32S SIR/L-16-JB**	✓	**32**	**32**	**30**	**250**	**20**	**-**	**38**	
SM76808	**SM76860**	**A20P SIR/L-22-JB**	✓	**20**	**20**	**18**	**170**	**14**	**-**	**24**	22 IR/IL ISO (3.5-4.5)
SM76815	**SM76877**	**A25R SIR/L-22-JB**	✓	**25**	**25**	**23**	**200**	**16.5**	**-**	**30**	
SM72190	**SM72206**	**A32S SIR/L-22-JB**	✓	**32**	**32**	**30**	**250**	**20**	**-**	**38**	
SM11793	SM11809	S16x07M SIR/L-08	-	16	7	15	150	4	18	7.8	08 IR/IL ISO
SM11830	SM11847	S10K SIR/L-11	-	10	10	9	125	7	-	12	11 IR/IL ISO
SM11854	SM11861	S12K SIR/L-11	-	12	12	11	125	10	-	16	
SM00579	SM00586	S16M SIR/L-11	-	16	13	15	150	10	-	19	
SM11878	SM11885	S16x10M SIR/L-11	-	16	10	15	150	7	32	12	
SM11823	SM11816	S16x13M SIR/L-11	-	16	13	15	150	8	32	15	
SM11991	SM12004	S16x13M SIR/L-16	-	16	16	15	150	9	32	16	16 IR/IL ISO (0.35-3)
SM11915	SM11953	S16M SIR/L-16	-	16	13	15	150	11	-	19	
SM12011	SM12028	S20x16P SIR/L-16	-	20	16	18	170	10.5	35	19	
SM11922	SM11960	S20P SIR/L-16	-	20	20	18	170	12.5	-	24	
SM11939	SM11977	S25R SIR/L-16	-	25	25	23	200	16.5	-	30	
SM11946	SM11892	S32S SIR/L-16	-	32	32	30	250	20	-	38	
SM11984	SM11908	S40T SIR/L-16	-	40	40	37	300	24	-	44	
SM56961	SM56978	S25R SITR/L-16 (Trapezoidal)	-	25	25	23	200	16.5	-	30	16 IR/IL Trapezoidal (1.5-3)
SM56985	SM56992	S32S SITR/L-16 (Trapezoidal)	-	32	32	30	250	20	-	36	
SM12042	SM12080	S20P SIR/L-22	-	20	20	18	170	14	-	24	22 IR/IL ISO (3.5-4.5)
SM12059	SM12097	S25R SIR/L-22	-	25	25	23	200	16.5	-	30	
SM67035	**SM67042**	**S25R SIR/L-22S**	**-**	**25**	**25**	**23**	**200**	**16.5**	**-**	**30**	
SM12066	SM12103	S32S SIR/L-22	-	32	32	30	250	20	-	38	
SM12073	SM12035	S40T SIR/L-22	-	40	40	37	300	24	-	46	
SM57005	SM57012	S25R SITR/L-22 (Trapezoidal)	-	25	25	23	200	16.5	-	29	22 IR/IL Trapezoidal (4-6)
SM57029	SM57036	S32S SITR/L-22 (Trapezoidal)	-	32	32	30	250	20	-	38	
SM57159	SM57166	S40T SITR/L-22 (Trapezoidal)	-	40	40	37	300	24	-	46	

Size Designation	Master Insert*	Spare Parts						
		Screw	Shim	Shim Screw	Torx Key	Clamp	Clamp Screw	Torx Key
S16x07	08 IR/IL ISO	SSV M2.2x5-9503	-	-	STK-T06-9906	PSK2 9126	SSV M3.5x11 9532	STK-T15 9910
S10 - S16	11 IR/IL	SSV M2.5x6-9505	-	-	STK-T08-9908			
S16x13	16 IR/IL-ISO (0.35-3)	SSV M3.5x8-9510	-	-	STK-T15 9910			
S16 - S20		SSV M3.5x12 9526	-	-				
S25 - S32			BAX ER/L-16-9623	SBV5 M5.05-A3.5x9-9408				
S40		SSV M3.5x14 9512		SBV M5.05-A3.5x11-9407				
S25 - S32 (Trapezoidal)	16 IR/IL-TR (1.5-3)		-	-				
S20 - S25	22 IR/IL ISO (3.5-4.5)	SSV M4x12-9515	-	-				
S25S			BAX ER/L-22-9624	SBV3 M6x0.75 A4x10-9412				
S32 - S40		SSV M4x14-9516						
S25 - S40 (Trapezoidal)	22 IR/IL-TR (4-6)		-	-				

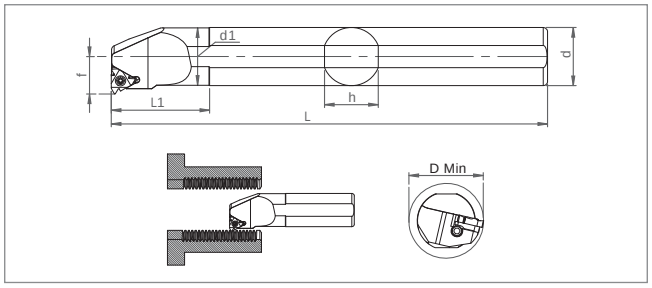

Ordering Code		Item Designation	Dimensions (mm)							Master Insert*
Direction		*TIR/L*	*d*	*d1*	*h*	*L*	*f*	*L1*	*D min*	
Right	*Left*									
SM44685	SM44692	S25R TIR/L-16	25	25	23	200	16.5	-	30	16 IR/IL ISO
SM44708	SM44715	S32S TIR/L-16	32	32	30	250	20.19	-	38	
SM44722	SM44739	S40T TIR/L-16	40	40	37	300	24	-	44	
SM44746	SM44753	S25R TIR/L-22	25	25	23	200	16.5	-	30	22 IR/IL ISO
SM44760	SM44777	S32S TIR/L-22	32	32	30	250	21.3	-	38	
SM44784	SM44791	S40T TIR/L-22	40	40	37	300	25.75	-	46	
SM51010	SM51027	S32S TIR/L-27	32	32	30	250	20	-	38	27 IR/IL ISO
SM51034	SM51041	S40T TIR/L-27	40	40	37	300	25.06	-	46	
SM00517	SM00524	S50U TIR/L-27	50	50	47	350	31.6	-	58	

Size Designation	Master Insert*	Spare Parts						
		Screw	Shim	Shim Screw	Torx Key	*Clamp*	*Clamp Screw*	*Torx Key*
S25 - S40	16 IR/IL ISO	SSV M3.5x12 9526	BAX TER-16-9625 TEL-16-9626	TASV1 M3x9-9220	STK-T15 9910	PSK2 9126	SSV M3.5x11 9532	STK-T15 9910
S25 - S40	22 IR/IL ISO	SSV M4x14-9516	BAX TER-22 9627 TEL-22 9628	TASV2 M4x12-9221				
S32 - S40	27 IR/IL ISO	SSV M5x18-9530	BAX TER-27 9630 BAX TEL-27-9631		STK-T20 9911			

*Suitable Insert brand is ISO

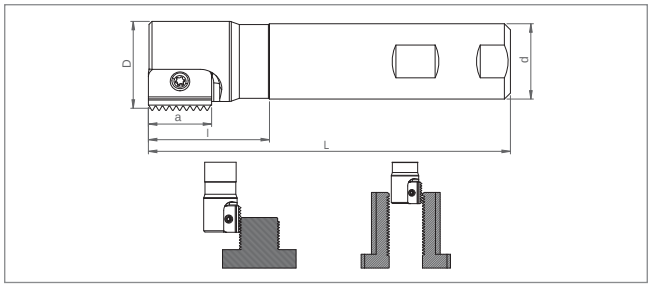

Ordering Code	Item Designation	Dimensions (mm)						Master Insert*
	THREADING TOOLS	*D*	*d*	*Z*	*L*	*l*	*a*	
SM49796	SDT C14 D12 W20 L100 Z01-H	12	20	1	100	30	14	14 CPT
SM49802	SDT C14 D14.5 W20 L100 Z01-H	14.5	20	1	100	30	14	
SM49819	SDT C14 D17 W20 L100 Z01-H	17	20	1	100	30	14	
SM49826	SDT C21 D18 W20 L100 Z01-H	18	20	1	100	40	21	21 CPT
SM49833	SDT C21 D21 W20 L120 Z01-H	21	20	1	120	40	21	
SM49857	SDT C21 D25 W20 L120 Z01-H	25	20	1	120	-	21	
SM49840	SDT C21 D29 W25 L120 Z01-H	29	25	1	120	-	21	
SM49864	SDT C21 D38 W32 L120 Z02-H	38	32	2	120	-	21	

Size Designation	Master Insert*	Spare Parts		
		Screw	Torx Key	Screw Torque Value
				N·m
D12.5 - D17	14 CPT	SSV M2.5x6-9505	STK-T08-9908	1,0
D18 - D38	21 CPT	SSV M4x10-9514	STK-T15-9910	3,0

*Suitable Insert brand is CPT

Milling Tools

F

- **90** Milling Tools
- **45** Milling Tools
- **Copy** Milling Tools
- **Ball Nose** Milling Tools

Insert			APKT 1003.. ISO	APKT 1604.. ISO	APMT 0602.. KRLY	APMT 11T3.. KRLY	APMT 1135.. YG-1	APKT 09T3.. TGTC
Page			**F248-251**	**F252-F253**	**F254**	**F254-F255**	**F256-F257**	**F258-F259**
Dimeter Range (mm)			Ø12-125	Ø25-200	Ø10-123	Ø16-80	Ø16-80	Ø16-20
Approach Angle			90°	90°	90°	90°	90°	90°
Max. Cutting Depth			10mm	16mm	6mm	11mm	11mm	8.8mm
Holder Type	Endmills	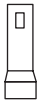	✓ Dia Range (mm) Ø12-40	✓ Dia Range (mm) Ø25-40	✓ Dia Range (mm) Ø10-13	✓ Dia Range (mm) Ø16-32	✓ Dia Range (mm) Ø16-26	✓ Dia Range (mm) Ø16-20
Holder Type	Modular Mills		✓ Dia Range (mm) Ø16-42	✓ Dia Range (mm) Ø25-42	-	✓ Dia Range (mm) Ø16-25	✓ Dia Range (mm) Ø16-25	✓ Dia Range (mm) Ø16-20
Holder Type	Face Mills		✓ Dia Range (mm) Ø40-125	✓ Dia Range (mm) Ø40-200	-	✓ Dia Range (mm) Ø40-80	✓ Dia Range (mm) Ø40-80	-
Holder Type	Helical Mills	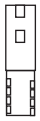	✓ Dia Range (mm) Ø20-40	-	-	-	-	-
Application	Face Milling		✓	✓	✓	✓	✓	✓
Application	Shoulder Milling		✓	✓	✓	✓	✓	✓
Application	Slot Milling		✓	✓	✓	✓	✓	✓
Application	Plunging		✓	✓	✓	✓	✓	✓
Application	Helical Interpolation		✓	✓	✓	✓	✓	✓
Application	Side Profile Milling		✓	-	-	-	-	-
Application	Profile Milling	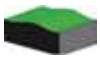	-	-	-	-	-	-
Application								
Application								

		Insert	APKT 1204.. TGTC	APKT 1705.. TGTC	APKT 11T3.. ZCC	R390.0702.. SNDVK	R390.11T3.. SNDVK	R390.1704.. SNDVK	R390.1806.. SNDVK
Page			**F258-F259**	**F258-F259**	**F260-F261**	**F262**	**F262-F263**	**F262-F263**	**F263**
Dimeter Range (mm)			Ø20-63	Ø25-100	Ø16-63	Ø10-16	Ø16-63	Ø25-125	Ø50-160
Approach Angle			90°	90°	90°	90°	90°	90°	90°
Max. Cutting Depth			12mm	16mm	11mm	5.8mm	10mm	15.7mm	15.4mm
Holder Type	Endmills		✓ Dia Range (mm) Ø20-32	✓ Dia Range (mm) Ø25-40	✓ Dia Range (mm) Ø16-32	✓ Dia Range (mm) Ø10-16	✓ Dia Range (mm) Ø16-25	✓ Dia Range (mm) Ø25-30	-
Holder Type	Modular Mills		✓ Dia Range (mm) Ø20-32	-	✓ Dia Range (mm) Ø16-25	-	✓ Dia Range (mm) Ø16-32	-	-
Holder Type	Face Mills		✓ Dia Range (mm) Ø40-63	✓ Dia Range (mm) Ø50-100	✓ Dia Range (mm) Ø40-63	-	✓ Dia Range (mm) Ø40-63	✓ Dia Range (mm) Ø50-125	✓ Dia Range (mm) Ø50-160
Holder Type	Helical Mills	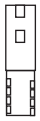	-	-	-	-	-	-	-
Application	Face Milling		✓	✓	✓	✓	✓	✓	✓
Application	Shoulder Milling		✓	✓	✓	✓	✓	✓	✓
Application	Slot Milling		✓	✓	✓	✓	✓	✓	✓
Application	Plunging		✓	✓	✓	✓	✓	✓	✓
Application	Helical Interpolation		✓	✓	✓	✓	✓	✓	✓
Application	Side Profile Milling		-	-	-	-	-	-	-
Application	Profile Milling	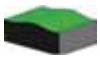	-	-	-	-	-	-	-
Application									
Application									

Insert			AS.T 11T3.. TNGLY	BD.T 0703.. KYCR	BD.T 11T3.. KYCR	BD.T 1704.. KYCR	AXMT 1235.. SMTM	AXMT 1705.. SMTM
Page			**F264-F265**	**F266**	**F266-F267**	**F266-F267**	**F268-F269**	**F268-F269**
Dimeter Range (mm)			Ø16-63	Ø10-12	Ø16-100	Ø25-100	Ø16-80	Ø25-100
Approach Angle			90°	90°	90°	90°	90°	90°
Max. Cutting Depth			10.6mm	6mm	10mm	15.7mm	10mm	14mm
Holder Type	Endmills	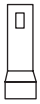	✓ Dia Range (mm) Ø16-32	✓ Dia Range (mm) Ø10-12	✓ Dia Range (mm) Ø16-32	✓ Dia Range (mm) Ø25-32	✓ Dia Range (mm) Ø16-25	✓ Dia Range (mm) Ø25-40
Holder Type	Modular Mills		✓ Dia Range (mm) Ø20-32	-	✓ Dia Range (mm) Ø16-32	-	✓ Dia Range (mm) Ø16-25	✓ Dia Range (mm) Ø32-40
Holder Type	Face Mills		✓ Dia Range (mm) Ø40-63	-	✓ Dia Range (mm) Ø40-100	✓ Dia Range (mm) Ø40-100	✓ Dia Range (mm) Ø40-80	✓ Dia Range (mm) Ø40-100
Holder Type	Helical Mills	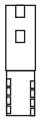	-	-	-	-	-	-
Application	Face Milling		✓	✓	✓	✓	✓	✓
Application	Shoulder Milling		✓	✓	✓	✓	✓	✓
Application	Slot Milling		✓	✓	✓	✓	✓	✓
Application	Plunging		✓	✓	✓	✓	✓	✓
Application	Helical Interpolation		✓	✓	✓	✓	✓	✓
Application	Side Profile Milling		-	-	-	-	-	-
Application	Profile Milling	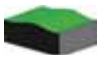	-	-	-	-	-	-

		Insert	ADMX 0702.. PRMT	ADMX 11T3.. PRMT	ADMX 1606.. PRMT	ADKT 1505..	APMT 1135.. ACHTK	ADMT 0803.. WLTR	ADMT 10T3.. WLTR
Page			**F270**	**F270**	**F270**	**F272-F273**	**F271**	**F274-F275**	**F274-F275**
Dimeter Range (mm)			Ø10-12	Ø20-63	Ø25-80	Ø25-125	Ø16-33	Ø16-25	Ø16-63
Approach Angle			90°	90°	90°	90°	90°	90°	90°
Max. Cutting Depth			7mm	10.5mm	10.5mm	14.3mm	11mm	8mm	10mm
Holder Type	Endmills		✓ Dia Range (mm) Ø10-12	✓ Dia Range (mm) Ø20-32	✓ Dia Range (mm) Ø25-32	✓ Dia Range (mm) Ø25-32	✓ Dia Range (mm) Ø16-33	✓ Dia Range (mm) Ø16-25	✓ Dia Range (mm) Ø16-25
Holder Type	Modular Mills		-	-	-	✓ Dia Range (mm) Ø25-32	-	✓ Dia Range (mm) Ø16-25	✓ Dia Range (mm) Ø16-25
Holder Type	Face Mills		-	✓ Dia Range (mm) Ø40-63	✓ Dia Range (mm) Ø50-80	✓ Dia Range (mm) Ø40-125	-	-	✓ Dia Range (mm) Ø40-63
Holder Type	Helical Mills	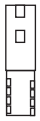	-	-	-	-	-	-	-
Application	Face Milling		✓	✓	✓	✓	✓	✓	✓
Application	Shoulder Milling		✓	✓	✓	✓	✓	✓	✓
Application	Slot Milling		✓	✓	✓	✓	✓	✓	✓
Application	Plunging		✓	✓	✓	✓	✓	✓	✓
Application	Helical Interpolation		✓	✓	✓	✓	✓	✓	✓
Application	Side Profile Milling		-	-	-	-		-	-
Application	Profile Milling	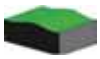	-	-	-	-		-	-
Application									
Application									

		Insert	ADKT 1204.. WLTR	ADMT 1606.. WLTR	RT 0703.. SAFETY	RT 1003.. SAFETY	RT 1606.. SAFETY	XOMX 0602.. SCO
Page			**F274-F275**	**F275**	**F276**	**F276-F277**	**F276-F277**	**F278**
Dimeter Range (mm)			Ø20-80	Ø50-80	Ø10-14	Ø16-63	Ø25-100	Ø10-20
Approach Angle			90°	90°	90°	90°	90°	90°
Max. Cutting Depth			11.7mm	15mm	7mm	10mm	16mm	5.5mm
Holder Type	Endmills	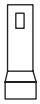	✓ Dia Range (mm) Ø20-32	-	✓ Dia Range (mm) Ø10-14	✓ Dia Range (mm) Ø16-25	✓ Dia Range (mm) Ø25-40	✓ Dia Range (mm) Ø10-20
Holder Type	Modular Mills		✓ Dia Range (mm) Ø20-32	-	-	✓ Dia Range (mm) Ø25-42	-	-
Holder Type	Face Mills		✓ Dia Range (mm) Ø40-80	✓ Dia Range (mm) Ø50-80	-	✓ Dia Range (mm) Ø40-63	✓ Dia Range (mm) Ø50-100	-
Holder Type	Helical Mills	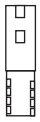	-	-	-	-	-	-
Application	Face Milling		✓	✓	✓	✓	✓	✓
Application	Shoulder Milling		✓	✓	✓	✓	✓	✓
Application	Slot Milling		✓	✓	✓	✓	✓	✓
Application	Plunging		✓	✓	✓	✓	✓	✓
Application	Helical Interpolation		✓	✓	✓	✓	✓	✓
Application	Side Profile Milling		-	-	-	-	-	-
Application	Profile Milling	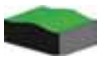	-	-	-	-	-	-
Application								
Application								

		Insert	XOMX 10T3.. SCO	XOMX 1204.. SCO	XOMX 1806.. SCO	EDPT 10T3.. KNMTL	EDPT 1404.. KNMTL	AOMT 1236.. MTSBH
Page			**F278-F279**	**F278-F279**	**F279**	**F280-F281**	**F280-F281**	**F282**
Dimeter Range (mm)			Ø16-63	Ø20-125	Ø50-125	Ø16-63	Ø20-80	Ø16-100
Approach Angle			90°	90°	90°	90°	90°	90°
Max. Cutting Depth			9mm	11mm	17mm	9.80mm	14mm	10mm
Holder Type	Endmills		✓ Dia Range (mm) Ø16-20	✓ Dia Range (mm) Ø20-32	-	✓ Dia Range (mm) Ø16-32	✓ Dia Range (mm) Ø20-40	✓ Dia Range (mm) Ø16-32
Holder Type	Modular Mills		✓ Dia Range (mm) Ø16-20	✓ Dia Range (mm) Ø20-32	-	✓ Dia Range (mm) Ø16-32	✓ Dia Range (mm) Ø20-32	✓ Dia Range (mm) Ø16-32
Holder Type	Face Mills		✓ Dia Range (mm) Ø40-63	✓ Dia Range (mm) Ø40-125	✓ Dia Range (mm) Ø50-125	✓ Dia Range (mm) Ø40-63	✓ Dia Range (mm) Ø40-80	✓ Dia Range (mm) Ø40-100
Holder Type	Helical Mills	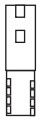	-	-	-	-	-	-
Application	Face Milling		✓	✓	✓	✓	✓	✓
Application	Shoulder Milling		✓	✓	✓	✓	✓	✓
Application	Slot Milling		✓	✓	✓	✓	✓	✓
Application	Plunging		✓	✓	✓	✓	✓	✓
Application	Helical Interpolation		✓	✓	✓	✓	✓	✓
Application	Side Profile Milling		-	-	-	-	-	-
Application	Profile Milling	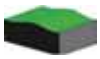	-	-	-	-	-	-
Application								
Application								

Insert			XDKT 0703.. CRTZ	XDKT 11T3.. CRTZ	AXMT 0602.. TGTC	APKT 0602.. LMN	AOMT 0702.. TNGLY	AVMT 0402.. TNGLY
Page			**F283**	**F283**	**F284**	**F284**	**F285**	**F285**
Dimeter Range (mm)			Ø12-17	Ø16-26	Ø10-16	Ø10-13	Ø12-22	Ø16-33
Approach Angle			90°	90°	90°	90°	90°	90°
Max. Cutting Depth			7mm	11mm	5.75mm	5.5mm	7mm	11mm
Holder Type	Endmills		✓ Dia Range (mm) Ø12-17	✓ Dia Range (mm) Ø16-26	✓ Dia Range (mm) Ø10-16	✓ Dia Range (mm) Ø10-13	✓ Dia Range (mm) Ø12-22	✓ Dia Range (mm) Ø16-33
Holder Type	Modular Mills		-	-	-	-	-	-
Holder Type	Face Mills		-	-	-	-	-	-
Holder Type	Helical Mills	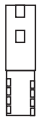	-	-	-	-	-	-
Application	Face Milling		✓	✓	✓	✓	✓	✓
Application	Shoulder Milling		✓	✓	✓	✓	✓	✓
Application	Slot Milling		✓	✓	✓	✓	✓	✓
Application	Plunging		✓	✓	✓	✓	✓	✓
Application	Helical Interpolation		✓	✓	✓	✓	✓	✓
Application	Side Profile Milling		-	-	-	-	-	
Application	Profile Milling	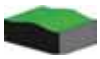	-	-	-	-	-	
Application								
Application								

Insert			LNHU 0904.. WLTR	LNMU 1306.. WLTR	LNMT 0804..	LNMT 1306..	LOEX 0804.. SCO	LP.U 0904.. SCO	LNHU 1306.. ACHTK
Page			**F286-F287**	**F286**	**F288-F289**	**F289**	**F290-F291**	**F292**	**F295**
Dimeter Range (mm)			Ø20-80	Ø40-100	Ø16-80	Ø32-125	Ø20-63	Ø20-63	Ø50-100
Approach Angle			90°	90°	90°	90°	90°	90°	90°
Max. Cutting Depth			8mm	12mm	8mm	12.5mm	8mm	8.3mm	12mm
Holder Type	Endmills		✓ Dia Range (mm) Ø20-32	-	✓ Dia Range (mm) Ø16-32	✓ Dia Range (mm) Ø32-40	✓ Dia Range (mm) Ø20-32	✓ Dia Range (mm) Ø20-32	-
Holder Type	Modular Mills		✓ Dia Range (mm) Ø20-32	-	✓ Dia Range (mm) Ø20-32	-	✓ Dia Range (mm) Ø20-32	✓ Dia Range (mm) Ø20-32	-
Holder Type	Face Mills		✓ Dia Range (mm) Ø40-80	✓ Dia Range (mm) Ø40-100	✓ Dia Range (mm) Ø40-80	✓ Dia Range (mm) Ø50-125	✓ Dia Range (mm) Ø40-63	✓ Dia Range (mm) Ø40-63	✓ Dia Range (mm) Ø50-100
Holder Type	Helical Mills	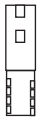	-	-	-	-	-	-	-
Application	Face Milling		✓	✓	✓	✓	✓	✓	✓
Application	Shoulder Milling		✓	✓	✓	✓	✓	✓	✓
Application	Slot Milling		✓	✓	✓	✓	✓	✓	✓
Application	Plunging		✓	✓	✓	✓	✓	✓	✓
Application	Helical Interpolation		✓	✓	✓	✓	✓	✓	✓
Application	Side Profile Milling		-	-	-	-	-		-
Application	Profile Milling		-	-	-	-	-		-
Application									
Application									

Insert			LOGU 0904.. MTSBH	LNMU 1107.. TNGLY	LN.. 1106.. T490	LNKT 1506.. ZCC	LNKT 1707.. KRLY	AN.X 0904..	AN.X 1205..
Page			**F294**	**F293**	**F296**	**F297**	**F297**	**F298-F299**	**F298-F299**
Dimeter Range (mm)			Ø16-80	Ø32-80	Ø25-80	Ø50-125	Ø50-100	Ø16-63	Ø50-100
Approach Angle			90°	90°	90°	90°	90°	90°	90°
Max. Cutting Depth			8mm	9.70mm	9mm	12mm	16.5mm	8mm	12mm
Holder Type	Endmills	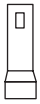	✓ Dia Range (mm) Ø16-32	✓ Dia Range (mm) Ø32-40	✓ Dia Range (mm) Ø25-32	-	-	✓ Dia Range (mm) Ø16-32	-
Holder Type	Modular Mills		✓ Dia Range (mm) Ø20-32	-	-	-	-	✓ Dia Range (mm) Ø20-25	-
Holder Type	Face Mills		✓ Dia Range (mm) Ø40-80	✓ Dia Range (mm) Ø50-80	✓ Dia Range (mm) Ø40-80	✓ Dia Range (mm) Ø50-125	✓ Dia Range (mm) Ø50-100	✓ Dia Range (mm) Ø40-63	✓ Dia Range (mm) Ø50-100
Holder Type	Helical Mills	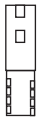	-	-	-	-	-	-	
Application	Face Milling		✓	✓	✓	✓	✓	✓	✓
Application	Shoulder Milling		✓	✓	✓	✓	✓	✓	✓
Application	Slot Milling		✓	✓	✓	✓	✓	✓	✓
Application	Plunging		✓	✓	✓	✓	✓	✓	✓
Application	Helical Interpolation		✓	✓	✓	✓	✓	✓	✓
Application	Side Profile Milling		-	-	-	-	-	-	-
Application	Profile Milling	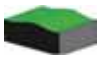	-	-	-	-	-	-	-
Application									
Application									

Insert			AN.X 1706..	LN.X 1006.. KRLY	LN.X 1510.. KRLY	LOMU 1004.. KYCR	LOMU 1505.. KYCR	ANGX 1105.. ZCC
Page			**F299**	**F300-F301**	**F300-F301**	**F302-F303**	**F302-F303**	**F304**
Dimeter Range (mm)			Ø50-125	Ø16-63	Ø32-160	Ø16-63	Ø40-100	Ø25-63
Approach Angle			90°	90°	90°	90°	90°	90°
Max. Cutting Depth			16.3mm	9mm	14mm	10mm	15mm	10mm
Holder Type	Endmills	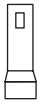	-	✓ Dia Range (mm) Ø16-40	✓ Dia Range (mm) Ø32-40	✓ Dia Range (mm) Ø16-33	-	✓ Dia Range (mm) Ø25-32
Holder Type	Modular Mills		-	✓ Dia Range (mm) Ø16-25	-	✓ Dia Range (mm) Ø16-32	-	-
Holder Type	Face Mills		✓ Dia Range (mm) Ø50-125	✓ Dia Range (mm) Ø40-63	✓ Dia Range (mm) Ø50-160	✓ Dia Range (mm) Ø40-63	✓ Dia Range (mm) Ø40-100	✓ Dia Range (mm) Ø40-63
Holder Type	Helical Mills	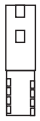	-	-	-	-	-	-
Application	Face Milling		✓	✓	✓	✓	✓	✓
Application	Shoulder Milling		✓	✓	✓	✓	✓	✓
Application	Slot Milling		✓	✓	✓	✓	✓	✓
Application	Plunging		✓	✓	✓	✓	✓	✓
Application	Helical Interpolation		✓	✓	✓	✓	✓	✓
Application	Side Profile Milling		-	-	-	-	-	-
Application	Profile Milling	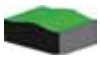	-	-	-	-	-	-
Application								
Application								

		Insert	ANGX 1506.. ZCC	LQMU 1107.. TNGLY	LNGX 1205.. PRMT	LNGU 15T.. KNMTL	XNPU 15T6.. WDA	AN.X 1607.. TGTC	LNGX 1307.. WLTR
Page			**F304**	**F305**	**F306**	**F308**	**F308**	**F307**	**F309**
Dimeter Range (mm)			Ø50-100	Ø25-63	Ø25-100	Ø40-100	Ø40-100	Ø50-100	Ø50-125
Approach Angle			90°	90°	90°	90°	90°	90°	90°
Max. Cutting Depth			14mm	9mm	12mm	15.5mm	14.5mm	15mm	12mm
Holder Type	Endmills	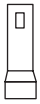	-	✓ Dia Range (mm) Ø25-32	✓ Dia Range (mm) Ø25-32	-	-	-	-
	Modular Mills		-	-	-	-	-	-	-
	Face Mills		✓ Dia Range (mm) Ø50-100	✓ Dia Range (mm) Ø40-63	✓ Dia Range (mm) Ø50-100	✓ Dia Range (mm) Ø40-100	✓ Dia Range (mm) Ø40-100	✓ Dia Range (mm) Ø40-100	✓ Dia Range (mm) Ø50-125
	Helical Mills	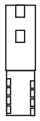	-	-	-	-	-	-	-
Application	Face Milling		✓	✓	✓	✓	✓	✓	✓
	Shoulder Milling		✓	✓	✓	✓	✓	✓	✓
	Slot Milling		✓	✓	✓	✓	✓	✓	✓
	Plunging		✓	✓	✓	✓	✓	✓	✓
	Helical Interpolation		✓	✓	✓	✓	✓	✓	✓
	Side Profile Milling		-	-	-	-	-	-	-
	Profile Milling	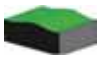	-	-	-	-	-	-	-

		Insert	4NKT 0603.. TGTC	XNKT 0604.. KRLY	XNKT 0805.. KRLY	3PKT 0402.. TGTC	3PKT 0603.. TGTC	3PKT 1004.. TGTC	3PKT 1505.. TGTC
	Page		**F310-F311**	**F312-F313**	**F312-F313**	**F314**	**F314-F315**	**F314-F315**	**F315**
	Dimeter Range (mm)		Ø16-63	Ø20-42	Ø30-125	Ø10-16	Ø12-20	Ø16-63	Ø40-125
	Approach Angle		90°	90°	90°	90°	90°	90°	90°
	Max. Cutting Depth		6mm	5.5mm	8mm	3.5mm	5mm	7mm	11mm
Holder Type	Endmills		✓ Dia Range (mm) Ø16-32	✓ Dia Range (mm) Ø20-33	✓ Dia Range (mm) Ø30-40	✓ Dia Range (mm) Ø10-16	✓ Dia Range (mm) Ø12-20	✓ Dia Range (mm) Ø16-32	-
Holder Type	Modular Mills		✓ Dia Range (mm) Ø16-42	✓ Dia Range (mm) Ø20-42	✓ Dia Range (mm) Ø30-40	-	-	✓ Dia Range (mm) Ø20-40	-
Holder Type	Face Mills		✓ Dia Range (mm) Ø40-63	-	✓ Dia Range (mm) Ø40-125	-	-	✓ Dia Range (mm) Ø40-63	✓ Dia Range (mm) Ø40-125
Holder Type	Helical Mills	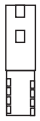	-	-	-	-	-	-	-
Application	Face Milling		✓	✓	✓	✓	✓	✓	✓
Application	Shoulder Milling		✓	✓	✓	✓	✓	✓	✓
Application	Slot Milling		✓	✓	✓	✓	✓	✓	✓
Application	Plunging		✓	✓	✓	✓	✓	✓	✓
Application	Helical Interpolation		✓	✓	✓	✓	✓	✓	✓
Application	Side Profile Milling		-	-	-	-	-	-	-
Application	Profile Milling	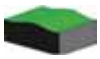	-	-	-	-	-	-	-
Application									
Application									

Insert			TN.X 1005..	TP.T 1003..	TPKT 1103.. YG-1	TPKT 1605.. YG-1	6NGU 0604.. TGTC	6NGU 0905.. TGTC	6NKU 0403.. TGTC	TNGX 1004.. PRMT
Page			**F316**	**F317**	**F318**	**F319**	**F320**	**F320**	**F322**	**F317**
Dimeter Range (mm)			Ø20-63	Ø25-80	Ø20-26	Ø50-125	Ø25-32	Ø50-80	Ø20-32	Ø20-63
Approach Angle			90°	90°	90°	90°	90°	90°	90°	90°
Max. Cutting Depth			8mm	8mm	7mm	11mm	6.2mm	9.2mm	4.1mm	5mm
Holder Type	Endmills	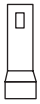	✓ Dia Range (mm) Ø20-32	✓ Dia Range (mm) Ø25-32	✓ Dia Range (mm) Ø20-26	-	✓ Dia Range (mm) Ø25-32	-	✓ Dia Range (mm) Ø20-32	✓ Dia Range (mm) Ø20-32
Holder Type	Modular Mills		✓ Dia Range (mm) Ø20-32	✓ Dia Range (mm) Ø25-32	-	✓ Dia Range (mm) Ø50-125	✓ Dia Range (mm) Ø25-32	-	✓ Dia Range (mm) Ø20-32	-
Holder Type	Face Mills		✓ Dia Range (mm) Ø40-63	✓ Dia Range (mm) Ø40-80	-	-	-	✓ Dia Range (mm) Ø50-80	-	✓ Dia Range (mm) Ø40-63
Holder Type	Helical Mills	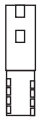	-	-	-	-	-	-	-	
Application	Face Milling		✓	✓	✓	✓	✓	✓	✓	✓
Application	Shoulder Milling		✓	✓	✓	✓	✓	✓	✓	✓
Application	Slot Milling		✓	✓	✓	✓	✓	✓	✓	✓
Application	Plunging		✓	✓	✓	✓	✓	✓	✓	✓
Application	Helical Interpolation		✓	✓	✓	✓	✓	✓	✓	✓
Application	Side Profile Milling		-	-	-	-	-	-	-	-
Application	Profile Milling	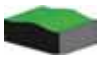	-	-	-	-	-	-	-	-

		Insert	TOMT 0603.. TNGLY	TOMT 1004.. TNGLY	TOMT 1506.. TNGLY	TOMT 0605.. KYCR	TNMX 1806.. TGTC	WNMU 0504.. KYCR	WNMU 0806.. KYCR	XNEX 0403.. SCO
Page			**F321**	**F321**	**F321**	**F324**	**F329**	**F327**	**F327**	**F328**
Dimeter Range (mm)			Ø16-25	Ø25-63	Ø50-125	Ø20-63	Ø63-100	Ø25-63	Ø50-125	Ø17-33
Approach Angle			90°	90°	90°	90°	90°	90°	90°	90°
Max. Cutting Depth			6mm	10mm	15mm	6mm	13mm	5mm	8mm	4mm
Holder Type	Endmills		✓ Dia Range (mm) Ø16-25	✓ Dia Range (mm) Ø25-32	-	✓ Dia Range (mm) Ø20-32	-	✓ Dia Range (mm) Ø25-32	-	✓ Dia Range (mm) Ø17-33
Holder Type	Modular Mills		-	-	-	-	-	-	-	✓ Dia Range (mm) Ø20-25
Holder Type	Face Mills		-	✓ Dia Range (mm) Ø40-63	✓ Dia Range (mm) Ø50-125	✓ Dia Range (mm) Ø40-63	✓ Dia Range (mm) Ø63-100	✓ Dia Range (mm) Ø40-63	✓ Dia Range (mm) Ø50-125	✓ Dia Range (mm) Ø40-125
Holder Type	Helical Mills	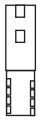	-	-	-	-	-	-	-	-
Application	Face Milling		✓	✓	✓	✓	✓	✓	✓	✓
Application	Shoulder Milling		✓	✓	✓	✓	✓	✓	✓	✓
Application	Slot Milling		✓	✓	✓	✓	✓	✓	✓	✓
Application	Plunging		✓	✓	✓	✓	✓	✓	✓	✓
Application	Helical Interpolation		✓	✓	✓	✓	✓	✓	✓	✓
Application	Side Profile Milling		-	-	-	-	-	-	-	-
Application	Profile Milling	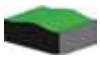	-	-	-	-	-	-	-	-
Application										
Application										

Insert			XNEX 0806.. SCO	WNEX 0806.. YG-1	WNGX 0403.. KRLY	WNGX 0806.. KRLY	WNHU 0806.. ZCC	WNGU 0403.. ACHTECK	WNHU 0806.. ACHTECK	WN.U 0705..
Page			**F328**	**F325**	**F330**	**F330**	**F331**	**F326**	**F326**	**F332**
Dimeter Range (mm)			Ø50-160	Ø50-100	Ø20-32	Ø50-100	Ø50-100	Ø17-63	Ø50-100	Ø50-100
Approach Angle			90°	90°	90°	90°	90°	90°	90°	90°
Max. Cutting Depth			7.5mm	8.2mm	4.3mm	8.2mm	7.5mm	4mm	7mm	7mm
Holder Type	Endmills	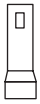	-	✓ Dia Range (mm) Ø35-40	✓ Dia Range (mm) Ø20-32	-	-	✓ Dia Range (mm) Ø17-26	-	-
Holder Type	Modular Mills		-	-	✓ Dia Range (mm) Ø20-32	-	-	-	-	-
Holder Type	Face Mills		✓ Dia Range (mm) Ø50160	✓ Dia Range (mm) Ø50-160	-	✓ Dia Range (mm) Ø50-100	✓ Dia Range (mm) Ø50-100	✓ Dia Range (mm) Ø40-63	✓ Dia Range (mm) Ø50-100	✓ Dia Range (mm) Ø50-100
Holder Type	Helical Mills	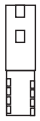	-	-	-	-	-	-	-	-
Application	Face Milling		✓	✓	✓	✓	✓	✓	✓	✓
Application	Shoulder Milling		✓	✓	✓	✓	✓	✓	✓	✓
Application	Slot Milling		✓	✓	✓	✓	✓	✓	✓	✓
Application	Plunging		✓	✓	✓	✓	✓	✓	✓	✓
Application	Helical Interpolation		✓	✓	✓	✓	✓	✓	✓	✓
Application	Side Profile Milling		-	-	-	-	-	-	-	-
Application	Profile Milling	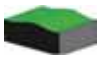	-	-	-	-	-	-	-	-

Insert			TPKN 1603.. ISO	TPKN 2204.. ISO	APKT 1003.. ISO	APKT 1643.. ISO	SEMT 1304.. TGTC	SEET 12T3.. ZCC	SOMT 12T3.. MTSBH	SDMT 09T3.. WLTR
Page			**F333**	**F333**	**F334**	**F334**	**F334**	**F335**	**F335**	**F336**
Dimeter Range (mm)			Ø50-125	Ø63-160	Ø63-100	Ø63-125	Ø50-80	Ø50-125	Ø63-100	Ø25-63
Approach Angle			90°	90°	75°	75°	90°	90°	90°	90°
Max. Cutting Depth			12mm	18mm	5mm	10mm	11mm	12mm	11mm	8.4mm
Holder Type	Endmills		-	-	-	-	-	-	-	✓ Dia Range (mm) Ø25-33
Holder Type	Modular Mills		-	-	-	-	-	-	-	✓ Dia Range (mm) Ø20-25
Holder Type	Face Mills		✓ Dia Range (mm) Ø50-125	✓ Dia Range (mm) Ø63-160	✓ Dia Range (mm) Ø63-100	✓ Dia Range (mm) Ø63-125	✓ Dia Range (mm) Ø50-80	✓ Dia Range (mm) Ø50-125	✓ Dia Range (mm) Ø63-100	✓ Dia Range (mm) Ø40-63
Holder Type	Helical Mills	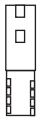	-	-	-	-	-	-	-	-
Application	Face Milling		✓	✓	✓	✓	✓	✓	✓	✓
Application	Shoulder Milling		✓	✓	✓	✓	✓	✓	✓	✓
Application	Slot Milling		✓	✓	✓	✓	✓	✓	✓	✓
Application	Plunging		✓	✓	✓	✓	✓	✓	✓	✓
Application	Helical Interpolation		✓	✓	✓	✓	✓	✓	✓	✓
Application	Side Profile Milling		-	-	-	-	-	-	-	-
Application	Profile Milling	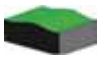	-	-	-	-	-	-	-	-
Application										
Application										

Insert			SDMT 09T3.. WLTR	490R-08.. SNDVK	490R-14.. SNDVK	SDMT 1506.. WDA	SQKU 0703.. TGTC	SD.T 09M4.. KRLY	SD.T 1305.. KRLY
Page			**F336**	**F338**	**F338**	**F339**	**F340**	**F341**	**F341**
Dimeter Range (mm)			Ø20-32	Ø20-63	Ø50-80	Ø50-125	Ø16-63	Ø25-63	Ø50-100
Approach Angle			45°	90°	90°	90°	90°	90°	90°
Max. Cutting Depth			7mm	5.5mm	10.6mm	12mm	5mm	7mm	11mm
Holder Type	Endmills		-	✓ Dia Range (mm) Ø20-33	-	-	✓ Dia Range (mm) Ø16-32	✓ Dia Range (mm) Ø25-32	-
Holder Type	Modular Mills		✓ Dia Range (mm) Ø20-32	✓ Dia Range (mm) Ø20-32	-	-	-	-	-
Holder Type	Face Mills		-	✓ Dia Range (mm) Ø40-63	✓ Dia Range (mm) Ø50-80	✓ Dia Range (mm) Ø50-125	✓ Dia Range (mm) Ø40-63	✓ Dia Range (mm) Ø40-63	✓ Dia Range (mm) Ø50-100
Holder Type	Helical Mills	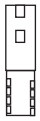	-	-	-	-	-	-	-
Application	Face Milling		✓	✓	✓	✓	✓	✓	✓
Application	Shoulder Milling		✓	✓	✓	✓	✓	✓	✓
Application	Slot Milling		✓	✓	✓	✓	✓	✓	✓
Application	Plunging		✓	✓	✓	✓	✓	✓	✓
Application	Helical Interpolation		✓	✓	✓	✓	✓	✓	✓
Application	Side Profile Milling		-	-	-	-	-	-	-
Application	Profile Milling	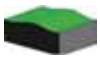	-	-	-	-	-	-	-
Application									
Application									

		Insert	SYHU 0704..	SDMT 1205.. PRMT	SN.. 1206.. ISO	SNMU 1305.. KYCR	SNMU 1305.. PNTR	SN.. 1206.. ISO	SN.. 1206.. ISO
Page			**F344**	**F345**	**F345**	**F346**	**F347**	**F348**	**F348**
Dimeter Range (mm)			Ø50-100	Ø50-125	Ø50-200	Ø50-160	Ø50-125	Ø50-315	Ø50-125
Approach Angle			50°	90°	89°	88°	89°	45°	75°
Max. Cutting Depth			4.6mm	10mm	10mm	5mm	9mm	6mm	8mm
Holder Type	Endmills		-	-	-	-	-	-	-
Holder Type	Modular Mills		-	-	-	-	-	-	-
Holder Type	Face Mills		✓ Dia Range (mm) Ø50-100	✓ Dia Range (mm) Ø50-125	✓ Dia Range (mm) Ø50-200	✓ Dia Range (mm) Ø50-160	✓ Dia Range (mm) Ø50-125	✓ Dia Range (mm) Ø50-315	✓ Dia Range (mm) Ø50-315
Holder Type	Helical Mills	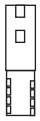	-	-	-	-	-	-	-
Application	Face Milling		✓	✓	✓	✓	✓	✓	✓
Application	Shoulder Milling		-	✓	-	-	-	-	-
Application	Slot Milling		-	✓	-	-	-	-	-
Application	Plunging		-	-	-	-	-	-	-
Application	Helical Interpolation		-	-	-	-	-	-	-
Application	Side Profile Milling		-	-	-	-	-	-	-
Application	Profile Milling	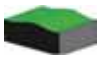	-	-	-	-	-	-	-
Application									
Application									

Insert			SEET 12T3 ZCC	SNMU 1305..	SEMT 13T3 MTSBH	R345-13.. SNDVK	SNMT 1205.. PRMT	SEET 0903 KRLY	SE.T 12T3 YG-1	SEMT 13T3AG YG-1
Page			**F349**	**F350**	**F353**	**F351**	**F351**	**F352**	**F356**	**F356**
Dimeter Range (mm)			Ø50-160	Ø50-100	Ø50-80	Ø50-100	Ø50-160	Ø25-80	Ø50-100	Ø50-100
Approach Angle			45°	45°	45°	45°	45°	45°	45°	45°
Max. Cutting Depth			6mm	6mm	6mm	6mm	6.5mm	4mm	6mm	6mm
Holder Type	Endmills	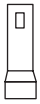	-	-	-	-	-	-	-	-
Holder Type	Modular Mills		-	-	-	-	-	-	-	-
Holder Type	Face Mills		✓ Dia Range (mm) Ø50-160	✓ Dia Range (mm) Ø50-100	✓ Dia Range (mm) Ø50-80	✓ Dia Range (mm) Ø50-125	✓ Dia Range (mm) Ø50-160	✓ Dia Range (mm) Ø50-100	✓ Dia Range (mm) Ø50-100	✓ Dia Range (mm) Ø50-100
Holder Type	Helical Mills	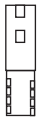	-	-	-	-	-			
Application	Face Milling		✓	✓	✓	✓	✓	✓	✓	✓
Application	Shoulder Milling		✓	✓	✓	✓	✓	✓	✓	✓
Application	Slot Milling		✓	✓	✓	✓	✓	✓	✓	✓
Application	Plunging		-	-	-	-	-	-	-	-
Application	Helical Interpolation		-	-	-	-	-	-	-	-
Application	Side Profile Milling		-	-	-	-	-	-	-	-
Application	Profile Milling	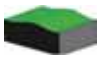	-	-	-	-	-	-	-	-

Insert			SE.. 14M4 KRLY	SNMU 1307.. TNGLY	ONMU 0507.. TNGLY	RNMU 1307.. TNGLY	SNMU 1206.. TNGLY	SNEG 1306.. ZCC	SZMU 0804.. ISC	SN.X 1306.. TGTC
Page			**F352**	**F354**	**F354**	**F364**	**F346**	**F355**	**F347**	**F355**
Dimeter Range (mm)			Ø50-125	Ø63-125	Ø63-125	Ø63-125	Ø50-80	Ø50-160	Ø40-80	Ø50-80
Approach Angle			45°	45°	45°	-°	-°	45°	-°	45°
Max. Cutting Depth			6.5mm	6mm	10mm	5mm	9.5mm	7mm	5mm	7mm
Holder Type	Endmills		-	-	-	-	-	-	-	-
Holder Type	Modular Mills		-	-	-	-	-	-	-	-
Holder Type	Face Mills		✓ Dia Range (mm) Ø50-125	✓ Dia Range (mm) Ø63-125	✓ Dia Range (mm) Ø63-125	✓ Dia Range (mm) Ø63-125	✓ Dia Range (mm) Ø50-80	✓ Dia Range (mm) Ø50-160	✓ Dia Range (mm) Ø40-80	✓ Dia Range (mm) Ø50-315
Holder Type	Helical Mills	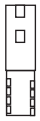	-	-	-	-	-	-	-	-
Application	Face Milling		✓	✓	✓	✓	✓	✓	✓	✓
Application	Shoulder Milling		✓	-	-	-	-	-	-	-
Application	Slot Milling		✓	-	-	-	-	-	-	-
Application	Plunging		-	-	-	-	-	-	-	-
Application	Helical Interpolation		-	-	-	-	-	-	-	-
Application	Side Profile Milling		-	-	-	-	-	-	-	-
Application	Profile Milling	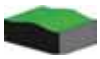	-	-	-	-	-	-	-	-
Application										
Application										

Insert			SPKN 1203.. ISO	SNGN 1204.. KYCR	XNMU 0605.. TGTC	XNMU 0906.. TGTC	HNKX 0604.. LMN	HXKU 0604.. TGTC	ON.X 0505..
Page			**F357**	**F357**	**F358**	**F358**	**F359**	**F359**	**F350**
Dimeter Range (mm)			Ø50-315	Ø63-100	Ø50-80	Ø63-125	Ø50-80	Ø50-100	Ø50-100
Approach Angle			75°	88°	45°	45°	45°	45°	45°
Max. Cutting Depth			9.5mm	9.5mm	3.5mm	5mm	3.5mm	3.5mm	4mm
Holder Type	Endmills		-	-	-	-	-	-	-
Holder Type	Modular Mills		-	-	-	-	-	-	-
Holder Type	Face Mills		✓ Dia Range (mm) Ø50-315	✓ Dia Range (mm) Ø63-100	✓ Dia Range (mm) Ø50-80	✓ Dia Range (mm) Ø63-125	✓ Dia Range (mm) Ø50-80	✓ Dia Range (mm) Ø50-10	✓ Dia Range (mm) Ø50-100
Holder Type	Helical Mills	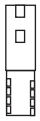	-	-	-	-	-	-	
Application	Face Milling		✓	✓	✓	✓	✓	✓	✓
Application	Shoulder Milling		-	-	-	-	-	-	-
Application	Slot Milling		-	-	-	-	-	-	-
Application	Plunging		-	-	-	-	-	-	-
Application	Helical Interpolation		-	-	-	-	-	-	-
Application	Side Profile Milling		-	-	-	-	-	-	-
Application	Profile Milling	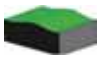	-	-	-	-	-	-	-

		Insert	ON.X 0606.. KRLY	PNMU 1205.. KYCR	PNMU 0905.. KYCR	PNMU 1206.. YG-1	ON.X 0806.. ISO	ONHU 0604.. ZCC	ONHU 08T6.. ZCC
Page			**F359**	**F360**	**F360**	**F361**	**F361**	**F363**	**F363**
Dimeter Range (mm)			Ø63-125	Ø63-125	Ø50-125	Ø50-160	Ø63-200	Ø63-100	Ø63-100
Approach Angle			45°	45°	66°	45°	45°	45°	45°
Max. Cutting Depth			4mm	6mm	6mm	4mm	5.5mm	4mm	5mm
Holder Type	Endmills		-	-	-	-	-	-	-
Holder Type	Modular Mills		-	-	-	-	-	-	-
Holder Type	Face Mills		✓ Dia Range (mm) Ø63-125	✓ Dia Range (mm) Ø63-125	✓ Dia Range (mm) Ø50-125	✓ Dia Range (mm) Ø50-160	✓ Dia Range (mm) Ø63-200	✓ Dia Range (mm) Ø63-100	✓ Dia Range (mm) Ø63-100
Holder Type	Helical Mills	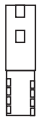	-	-	-	-	-	-	-
Application	Face Milling		✓	✓	✓	✓	✓	✓	✓
Application	Shoulder Milling		-	-	-	-	-	-	-
Application	Slot Milling		-	-	-	-	-	-	-
Application	Plunging		-	-	-	-	-	-	-
Application	Helical Interpolation		-	-	-	-	-	-	-
Application	Side Profile Milling		-	-	-	-	-	-	-
Application	Profile Milling	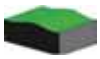	-	-	-	-	-	-	-
Application									
Application									

Insert			HN.J 0604.. KNMTL	HN.J 0704.. WDA	HN.J 0905.. KNMTL/ WDA	HNGX 0604.. PRMT	HNGX 0906.. PRMT	ONMU 0504.. SCO	XNMU 0705.. ACHTEK	XNMU 0906.. ACHTEK
Page			**F362**	**F362**	**F362**	**F363**	**F363**	**F364**	**F364**	**F364**
Dimeter Range (mm)			Ø50-80	Ø50-80	Ø50-160	Ø50-100	Ø63-160	Ø50-100	Ø50-100	Ø63-100
Approach Angle			45°	45°	45°	45°	45°	45°	45°	45°
Max. Cutting Depth			3.23mm	3.5mm	4.5mm	3mm	5mm	3mm	4.4mm	5mm
Holder Type	Endmills		-	-	-	-	-	-	-	-
Holder Type	Modular Mills		-	-	-	-	-	-	-	-
Holder Type	Face Mills		✓ Dia Range (mm) Ø50-80	✓ Dia Range (mm) Ø63-100	✓ Dia Range (mm) Ø50-160	✓ Dia Range (mm) Ø50-100	✓ Dia Range (mm) Ø63-160	✓ Dia Range (mm) Ø50-100	✓ Dia Range (mm) Ø50-100	✓ Dia Range (mm) Ø63-100
Holder Type	Helical Mills	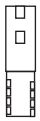	-	-	-	-	-	-	-	-
Application	Face Milling		✓	✓	✓	✓	✓	✓	✓	✓
Application	Shoulder Milling		-	-	-	-	-	-	-	-
Application	Slot Milling		-	-	-	-	-	-	-	-
Application	Plunging		-	-	-	-	-	-	-	-
Application	Helical Interpolation		-	-	-	-	-	-	-	-
Application	Side Profile Milling		-	-	-	-	-	-	-	-
Application	Profile Milling	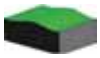	-	-	-	-	-	-	-	-
Application										
Application										

		Insert	OW.T 05T3.. TNGLY	OD.. 0504.. PRMT	OFER 07T3.. ISO	RNMU 1004.. TGTC	ROMU 1204.. KYCR	ROMU 1605.. KYCR	RNMU 1205.. TGTC	RNMU 1606.. TGTC	RQMT 10T3.. TNGLY	RQMT 1204.. TNGLY
Page			F362	F365	F365	F366	F367	F367	F366	F366	F367	F367
Dimeter Range (mm)			Ø50-80	Ø40-100	Ø63-125	Ø25-50	Ø50-80	Ø63-100	Ø32-63	Ø50-80	Ø40-52	Ø50-66
Approach Angle			41°	45°	43°	-°	-°	-°	-°	-°	-°	-°
Max. Cutting Depth			3mm	3.5mm	3mm	5mm	6mm	8mm	6mm	8mm	5mm	5mm
Holder Type	Endmills		-	-	-	✓ Dia Range (mm) Ø25-32	-	-	✓ Dia Range (mm) Ø32-40	-	-	-
Holder Type	Modular Mills		-	-	-	✓ Dia Range (mm) Ø25-32	-	-	✓ Dia Range (mm) Ø32-40	-	-	-
Holder Type	Face Mills		✓ Dia Range (mm) Ø50-80	✓ Dia Range (mm) Ø40-100	✓ Dia Range (mm) Ø63-125	✓ Dia Range (mm) Ø40-50	✓ Dia Range (mm) Ø50-80	✓ Dia Range (mm) Ø63-100	✓ Dia Range (mm) Ø40-63	✓ Dia Range (mm) Ø50-80	✓ Dia Range (mm) Ø40-52	✓ Dia Range (mm) Ø50-66
Holder Type	Helical Mills	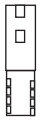			-	-	-	-	-	-	-	-
Application	Face Milling		✓	✓	✓	✓	✓	✓	✓	✓	✓	✓
Application	Shoulder Milling		-	✓	✓	✓	✓	✓	✓	✓	✓	✓
Application	Slot Milling		-	✓	✓	✓	✓	✓	✓	✓	✓	✓
Application	Plunging		-	-	-	✓	-	-	✓	✓	✓	✓
Application	Helical Interpolation		-	-	-	✓	-	-	✓	✓	✓	✓
Application	Side Profile Milling		-	-	-	-	-	-	-	-	-	-
Application	Profile Milling	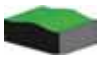	-	-	-	✓	-	-	✓	✓	✓	✓
Application												
Application												

Insert			RDKW 0501.. ISO	RDKW 0702.. ISO	RD.. 0803.. ISO	RD.. 1003.. ISO	RD.. 12T3.. ISO	RD.. 1604.. ISO	RD.. 10T3 ISO
Page			**G372**	**G372**	**G372-G373**	**G372-G373**	**G372-G373**	**G372-G373**	**G372-G373**
Dimeter Range (mm)			Ø08-14	Ø16-25	Ø16-35	Ø20-125	Ø25-125	Ø63-125	Ø20-63
Approach Angle			-°	-°	-°	-°	-°	-°	-°
Max. Cutting Depth			2.5mm	3.5mm	4mm	5mm	6mm	8mm	5mm
Holder Type	Endmills		✓ Dia Range (mm) Ø08-14	✓ Dia Range (mm) Ø16-25	✓ Dia Range (mm) Ø16-32	✓ Dia Range (mm) Ø20-40	✓ Dia Range (mm) Ø25-40	-	✓ Dia Range (mm) Ø20-32
Holder Type	Modular Mills		-	✓ Dia Range (mm) Ø16-25	✓ Dia Range (mm) Ø16-35	✓ Dia Range (mm) Ø20-42	✓ Dia Range (mm) Ø24-42	-	✓ Dia Range (mm) Ø20-32
Holder Type	Face Mills		-	-	-	✓ Dia Range (mm) Ø40-125	✓ Dia Range (mm) Ø40-125	✓ Dia Range (mm) Ø63-125	✓ Dia Range (mm) Ø40-63
Holder Type	Helical Mills	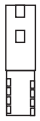	-	-	-	-	-	-	-
Application	Face Milling		✓	✓	✓	✓	✓	✓	✓
Application	Shoulder Milling		✓	✓	✓	✓	✓	✓	✓
Application	Slot Milling		✓	✓	✓	✓	✓	✓	✓
Application	Plunging		✓	✓	✓	✓	✓	✓	✓
Application	Helical Interpolation		✓	✓	✓	✓	✓	✓	✓
Application	Side Profile Milling		-	-	-	-	-	-	-
Application	Profile Milling	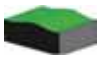	✓	✓	✓	✓	✓	✓	✓
Application									
Application									

		Insert	RD.. 1204 ISO	RPMT 1204 ACHTEK	RPMT 10T3 MTSBH	RPMT 1204 MTSBH	RYMX 1004 TGTC	RYMX 1205 TGTC	RPMT 10T3 KYCR	RPMT 1204 KYCR	RPMT 1605 KYCR
Page			**G372-G377**	**G368**	**G378**	**G378**	**G371**	**G371**	**G380-G381**	**G380-G381**	**G381**
Dimeter Range (mm)			Ø25-100	Ø26-63	Ø25-100	Ø25-100	Ø21-63	Ø32-100	Ø25-63	Ø32-80	Ø63-125
Approach Angle			6°	-°	-°	-°	-°	-°	-°	-°	-°
Max. Cutting Depth			6mm	5mm	5mm	6mm	5mm	6mm	5mm	6mm	8mm
Holder Type	Endmills	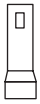	✓ Dia Range (mm) Ø25-33	✓ Dia Range (mm) Ø26-33	✓ Dia Range (mm) Ø25-32	✓ Dia Range (mm) Ø25	✓ Dia Range (mm) Ø21-33	✓ Dia Range (mm) Ø32-33	✓ Dia Range (mm) Ø25-35	✓ Dia Range (mm) Ø32-40	-
Holder Type	Modular Mills		✓ Dia Range (mm) Ø32-42	-	✓ Dia Range (mm) Ø25-42	✓ Dia Range (mm) Ø25-42	✓ Dia Range (mm) Ø25-40	✓ Dia Range (mm) Ø32-40	✓ Dia Range (mm) Ø25-32	✓ Dia Range (mm) Ø32-40	-
Holder Type	Face Mills		✓ Dia Range (mm) Ø40-100	✓ Dia Range (mm) Ø40-63	✓ Dia Range (mm) Ø40-100	✓ Dia Range (mm) Ø40-100	✓ Dia Range (mm) Ø40-63	✓ Dia Range (mm) Ø40-100	✓ Dia Range (mm) Ø40-63	✓ Dia Range (mm) Ø40-80	✓ Dia Range (mm) Ø63-125
Holder Type	Helical Mills	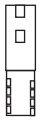	-	-	-	-	-	-	-	-	-
Application	Face Milling		✓	✓	✓	✓	✓	✓	✓	✓	✓
Application	Shoulder Milling		✓	✓	✓	✓	✓	✓	✓	✓	✓
Application	Slot Milling		✓	✓	✓	✓	✓	✓	✓	✓	✓
Application	Plunging		✓	✓	✓	✓	✓	✓	✓	✓	✓
Application	Helical Interpolation		✓	✓	✓	✓	✓	✓	✓	✓	✓
Application	Side Profile Milling		-	-	-	-	-	-	-	-	-
Application	Profile Milling	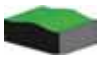	✓	✓	✓	✓	✓	✓	✓	✓	✓
Application											
Application											

Insert			QPMT 10T3 SMTM	RCKT 1204.. SNDVK	RPNX 10T3.. CRTZ	RPNX 1204.. CRTZ	RCKT 10T3.. ZCC	RCKT 1204.. ZCC
Page			**G382-G383**	**G384**	**G384**	**G384**	**G386**	**G386**
Dimeter Range (mm)			Ø25-63	Ø28-80	Ø40-80	Ø50-10	Ø40-63	Ø50-80
Approach Angle			-°	-°	-°	-°	-°	-°
Max. Cutting Depth			5mm	6mm	5mm	6mm	5mm	6mm
Holder Type	Endmills		✓ Dia Range (mm) Ø25-32	✓ Dia Range (mm) Ø28-35	-	-	-	-
	Modular Mills		✓ Dia Range (mm) Ø25-40	-	-	-	-	-
	Face Mills		✓ Dia Range (mm) Ø40-63	✓ Dia Range (mm) Ø50-80	✓ Dia Range (mm) Ø40-80	✓ Dia Range (mm) Ø50-100	✓ Dia Range (mm) Ø40-63	✓ Dia Range (mm) Ø50-80
	Helical Mills	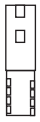	-	-	-	-	-	-
Application	Face Milling		✓	✓	✓	✓	✓	✓
	Shoulder Milling		✓	✓	✓	✓	✓	✓
	Slot Milling		✓	✓	✓	✓	✓	✓
	Plunging		✓	✓	✓	✓	✓	✓
	Helical Interpolation		✓	✓	✓	✓	✓	✓
	Side Profile Milling		-	-	-	-	-	-
	Profile Milling	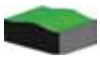	✓	✓	✓	✓	✓	✓

Insert			VCGT 1604.. ISO	VCGT 2205.. ISO	XEKT-MA 19M5.. KRLY	XEVT 1606.. TGTC	XEVT 2206.. TGTC	XPHT 16R0803 ZCC-CT	XPHT 20R10T3 ZCC-CT	XPHT 25R1204 ZCC-CT
Page			**F343**	**F343**	**F334**	**F344**	**F344**	**G386**	**G386**	**G386**
Dimeter Range (mm)			Ø40-80	Ø50-80	Ø40-63	Ø50-80	Ø50-80	Ø16	Ø20	Ø25
Approach Angle			90°	90°	90°	90°	90°	-	-	-
Max. Cutting Depth			11mm	14mm	17mm	16mm	21mm	-	-	-
Holder Type	Endmills		-	-	-	-	-	✓ Dia Range (mm) Ø16	✓ Dia Range (mm) Ø20	✓ Dia Range (mm) Ø25
Holder Type	Modular Mills		-	-	-	-	-	-	-	-
Holder Type	Face Mills		✓ Dia Range (mm) Ø40-80	✓ Dia Range (mm) Ø50-80	✓ Dia Range (mm) Ø40-63	✓ Dia Range (mm) Ø50-80	✓ Dia Range (mm) Ø50-80	-	-	-
Holder Type	Helical Mills	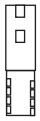	-	-	-	-	-	-	-	-
Application	Face Milling		✓	✓	✓	✓	✓	-	-	-
Application	Shoulder Milling		✓	✓	✓	✓	✓	-	-	-
Application	Slot Milling		✓	✓	✓	✓	✓	-	-	-
Application	Plunging		-	-	-	-	-	-	-	-
Application	Helical Interpolation		✓	✓	✓	✓	✓	-	-	-
Application	Side Profile Milling		-	-	-	-	-	-	-	-
Application	Profile Milling	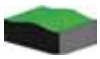	-	-	-	-	-	✓	✓	✓
Application										
Application										

Insert			P3208 WLTR	P3210 WLTR	P3212 WLTR	P3216 WLTR	P3220 WLTR	P3225 WLTR	P3232 WLTR
Page			**G387**	**G387**	**G387**	**G387**	**G387**	**G387**	**G387**
Dimeter Range (mm)			Ø8	Ø10	Ø12	Ø16	Ø20	Ø25	Ø32
Approach Angle			-°	-°	-°	-°	-°	-°	-°
Max. Cutting Depth			-	-	-	-	-	-	-
Holder Type	Endmills		✓ Dia Range (mm) Ø8	✓ Dia Range (mm) Ø10	✓ Dia Range (mm) Ø12	✓ Dia Range (mm) Ø16	✓ Dia Range (mm) Ø20	✓ Dia Range (mm) Ø25	✓ Dia Range (mm) Ø32
Holder Type	Modular Mills		-	-	-	-	-	-	-
Holder Type	Face Mills		-	-	-	-	-	-	-
Holder Type	Helical Mills	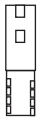	-	-	-	-	-	-	-
Application	Face Milling		-	-	-	-	-	-	-
Application	Shoulder Milling		-	-	-	-	-	-	-
Application	Slot Milling		-	-	-	-	-	-	-
Application	Plunging		-	-	-	-	-	-	-
Application	Helical Interpolation		-	-	-	-	-	-	-
Application	Side Profile Milling		-	-	-	-	-	-	-
Application	Profile Milling	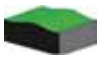	✓	✓	✓	✓	✓	✓	✓
Application									
Application									

SMOXH CUTTING TOOLS
Kalitenin Yükselen Gücü

d=8-32

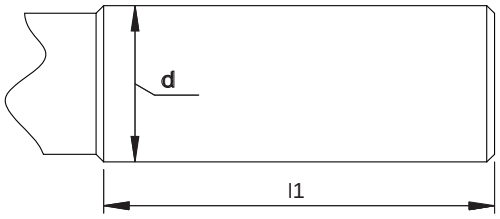

DIN 6535

CYLINDRICAL SHANK STANDARTS (h6) HA	
d (h6)	*l1*
8	36
10	40
12	45
14	45
16	48
18	48
20	50
25	56
32	60

d=8-20

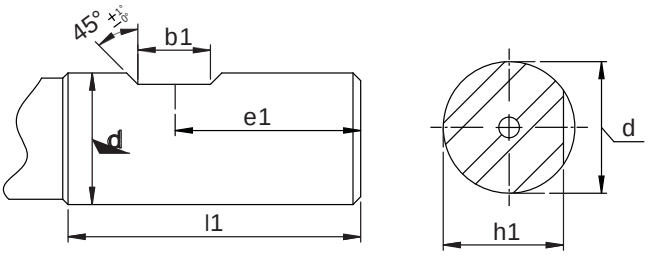

DIN 6535

d=25-32

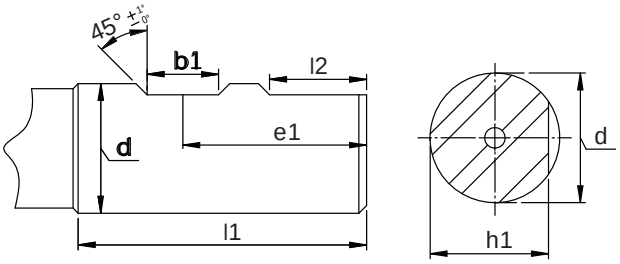

DIN 6535

WELDON TYPE END-MILLS CUTTER (h6) HB					
d (h6)	*b1 (+0.05/-0)*	*e1 (+0/-1)*	*h1 (h11)*	*l1 (+1/-0)*	*l2 (+2/-0)*
8	5.5	18	6.9	36	-
10	7	20	8.5	40	-
12	8	22.5	10.2	45	-
14	8	22.5	12.7	45	-
16	10	24	14.2	48	-
18	10	24	16.2	48	-
20	11	25	18.2	50	-
25	12	32	23	56	17
32	14	36	30	60	19

MOUNTING DIMENSIONS

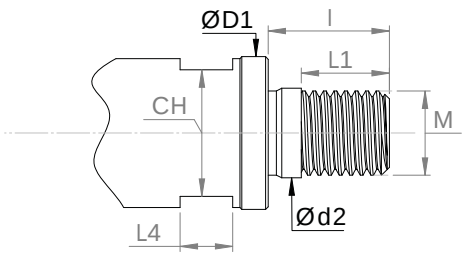

MODULAR TOOL DIMENSIONS

M	D1	d2	l	L1	L4	CH
6	10	6.5	12	7	5	8
8	15	8.5	17	12	6	12
10	18	10.5	19	14	8	15
12	21	12.5	23	18	10	18
16	29	17	23	18	12	24

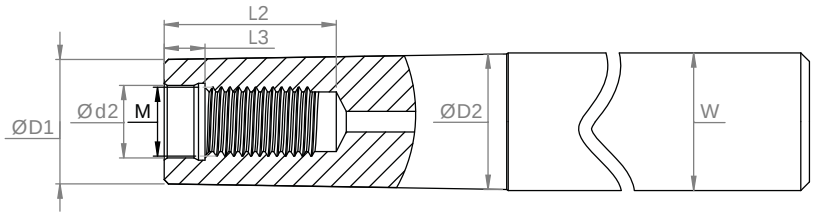

MODULAR TOOL HOLDER DIMENSIONS

M	D1	D2	d2	L2	L3	C
6	10	11.5	6.5	7	7	12
8	15	15.5	8.5	8	8	16
10	18	19.5	10.5	8	8	20
12	23	24.5	12.5	8.5	8.5	25
16	30	31.5	17	9.5	9.5	32

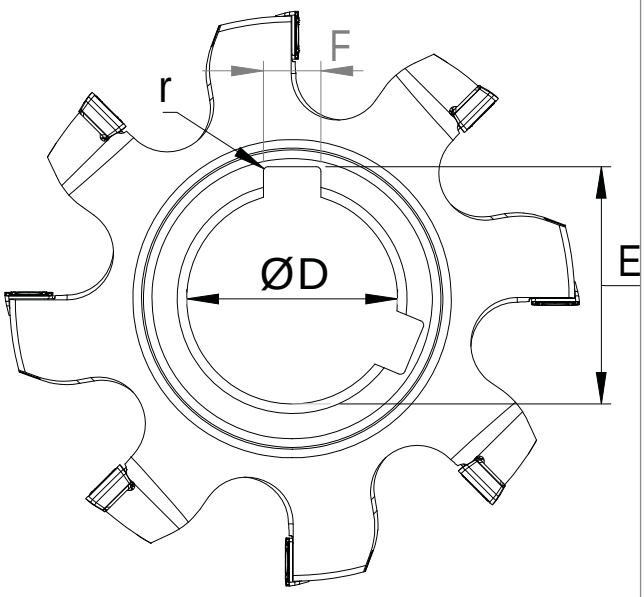

DISC MILLING CUTTER HOLE STANDARTS

Diameter	ØD=h7	E	F	r
13	**13** + 0.018 0	**14.6** + 0.25 0	**3** + 0.16 + 0.06	0.6
16	**16** + 0.018 0	**17.7** + 0.25 0	**4** + 0.19 + 0.07	0.6
19	**19** + 0.021 0	**21.1** + 0.25 0	**5** + 0.19 + 0.07	1
22	**22** + 0.021 0	**24.1** + 0.25 0	**6** + 0.19 + 0.07	1
27	**27** + 0.021 0	**29.8** + 0.25 0	**7** + 0.23 + 0.08	1.2
32	**32** + 0.025 0	**34.8** + 0.25 0	**8** + 0.23 + 0.08	1.2
40	**40** + 0.025 0	**43.5** + 0.25 0	**10** + 0.23 + 0.08	1.2
50	**50** + 0.025 0	**53.5** + 0.25 0	**12** + 0.23 + 0.08	1.6
60	**60** + 0.030 0	**64.2** + 0.25 0	**14** + 0.275 + 0.095	1.6
70	**70** + 0.030 0	**75.0** + 0.25 0	**16** + 0.275 + 0.095	2

SMOXH CUTTING TOOLS
Kalitenin Yükselen Gücü

A Type

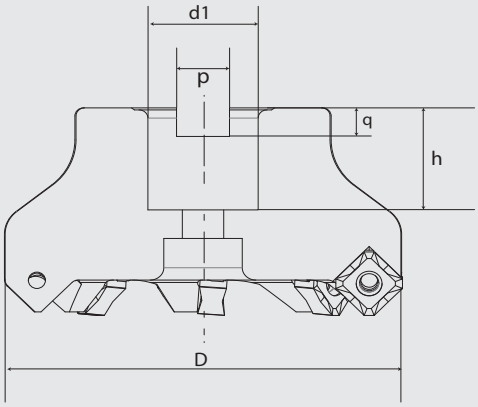

D	d1	d2	p	q	h
40	16	-	8.4	5.6	20
50	22	-	10.4	6.3	22
63	22	-	10.4	6.3	22
80	27	-	12.4	7	25
100	32	-	14.4	8	26

B Type

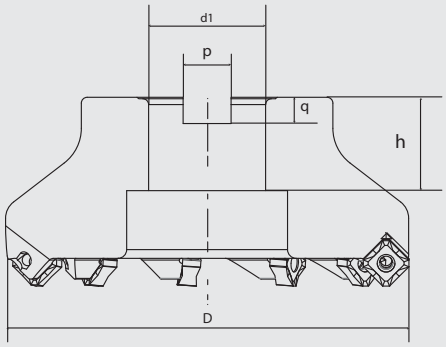

D	d1	d2	p	q	h
125	40	-	16.4	9	32

C Type

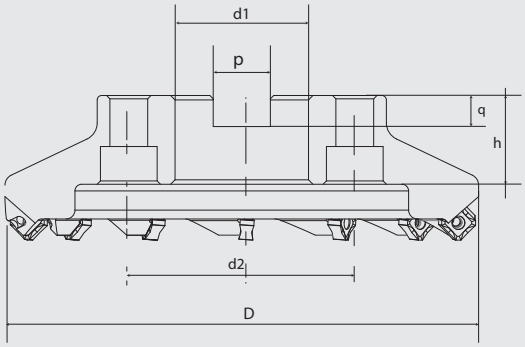

D	d1	d2	p	q	h
160	40	66.7	16.4	9	32
200	60	101.6	25.7	14	40
250	60	101.6	25.7	14	40

D Type

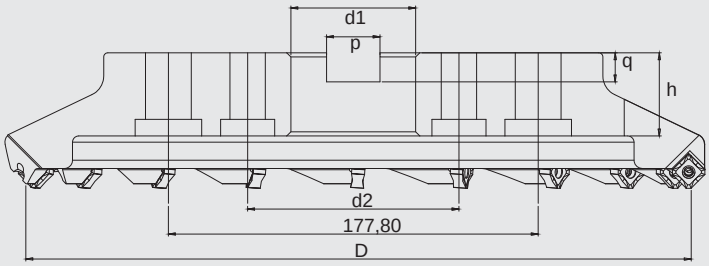

D	d1	d2	p	q	h
315	60	101.6	25.7	14	40

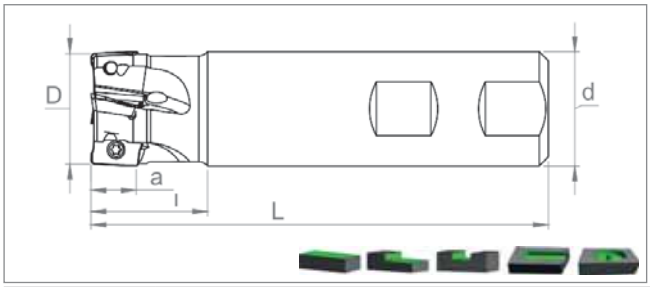

Ordering Code	Item Designation	Dimensions (mm)							Master Insert*
	ST90 APKT 1003.. ISO		*D*	*d*	*Z*	*L*	*l*	*a*	
SM12493	ST90 AP10 D12 W12 L120 Z01	-	12	12	1	120	30	10	
SM12172	ST90 AP10 D12 W16 L120 Z01	-	12	16	1	120	30	10	
SM12189	ST90 AP10 D14 W16 L120 Z01	-	14	16	1	120	30	10	
SM01729	ST90 AP10 D16 W16 L100 Z02-H	✓	16	16	2	100	30	10	
SM12196	ST90 AP10 D16 W16 L120 Z02	-	16	16	2	120	30	10	
SM12486	ST90 AP10 D16 W16 L120 Z02-H	✓	16	16	2	120	30	10	
SM12264	ST90 AP10 D16 W16 L150 Z02	-	16	16	2	150	40	10	
SM27794	ST90 AP10 D16 W16 L150 Z02-H	✓	16	16	2	150	40	10	
SM12318	ST90 AP10 D16 C16 L200 Z02	-	16	16	2	200	50	10	
SM38592	ST90 AP10 D16 C16 L200 Z02-H	✓	16	16	2	200	50	10	
SM38639	ST90 AP10 D17 W16 L150 Z02	-	17	16	2	150	25	10	
SM38585	ST90 AP10 D17 C16 L200 Z02	-	17	16	2	200	25	10	
SM12202	ST90 AP10 D18 W16 L120 Z02	-	18	16	2	120	25	10	
SM61217	ST90 AP10 D18 W16 L120 Z02-H	✓	18	16	2	120	25	10	
SM12271	ST90 AP10 D18 W16 L150 Z02	-	18	16	2	150	25	10	
SM12325	ST90 AP10 D18 C16 L200 Z02	-	18	16	2	200	30	10	
SM38578	ST90 AP10 D18 C16 L200 Z02-H	✓	18	16	2	200	30	10	
SM01736	ST90 AP10 D20 W20 L100 Z03-H	✓	20	20	3	100	30	10	
SM12219	ST90 AP10 D20 W20 L120 Z03	-	20	20	3	120	30	10	
SM12394	ST90 AP10 D20 W20 L120 Z03-H	✓	20	20	3	120	30	10	
SM12288	ST90 AP10 D20 W20 L150 Z03	-	20	20	3	150	40	10	
SM38622	ST90 AP10 D20 W20 L150 Z03-H	✓	20	20	3	150	40	10	
SM12349	ST90 AP10 D20 C20 L200 Z03	-	20	20	3	200	50	10	
SM38561	ST90 AP10 D20 C20 L200 Z03-H	✓	20	20	3	200	50	10	
SM38615	ST90 AP10 D21 W20 L150 Z03	-	21	20	3	150	30	10	
SM38554	ST90 AP10 D21 C20 L200 Z03	-	21	20	3	200	25	10	
SM12226	ST90 AP10 D22 W20 L120 Z03	-	22	20	3	120	25	10	
SM12295	ST90 AP10 D22 W20 L150 Z03	-	22	20	3	150	25	10	APKT 1003..
SM12356	ST90 AP10 D22 C20 L200 Z03	-	22	20	3	200	25	10	
SM12370	ST90 AP10 D23 W20 L120 Z03	-	23	20	3	120	25	10	
SM12233	ST90 AP10 D24 W20 L120 Z03	-	24	20	3	120	30	10	
SM12387	ST90 AP10 D24 W20 L150 Z03	-	24	20	3	150	25	10	
SM26889	ST90 AP10 D24 C20 L200 Z03	-	24	20	3	200	25	10	
SM01743	ST90 AP10 D25 W25 L100 Z03-H	✓	25	25	3	100	30	10	
SM12240	ST90 AP10 D25 W25 L120 Z03	-	25	25	3	120	30	10	
SM12417	ST90 AP10 D25 W25 L120 Z03-H	✓	25	25	3	120	30	10	
SM12332	ST90 AP10 D25 W25 L150 Z03	-	25	25	3	150	40	10	
SM38608	ST90 AP10 D25 W25 L150 Z03-H	✓	25	25	3	150	40	10	
SM12363	ST90 AP10 D25 C25 L200 Z03	-	25	25	3	200	50	10	
SM12479	ST90 AP10 D25 C25 L250 Z03		25	25	3	250	180	10	
SM12509	ST90 AP10 D26 W25 L120 Z03-H	✓	26	25	3	120	25	10	
SM12516	ST90 AP10 D26 W25 L150 Z03	-	26	25	3	150	25	10	
SM12523	ST90 AP10 D26 C25 L200 Z03	-	26	25	3	200	25	10	
SM12165	ST90 AP10 D30 W25 L120 Z04	-	30	25	4	120	30	10	
SM12455	ST90 AP10 D30 W25 L150 Z04	-	30	25	4	150	30	10	
SM12400	ST90 AP10 D32 W25 L120 Z04	-	32	25	4	120	30	10	
SM12257	ST90 AP10 D32 W32 L120 Z04	-	32	32	4	120	30	10	
SM12424	ST90 AP10 D32 W32 L120 Z04-H	✓	32	32	4	120	30	10	
SM12431	ST90 AP10 D32 W25 L150 Z04	-	32	25	4	150	40	10	
SM12448	ST90 AP10 D32 W32 L150 Z04	-	32	32	4	150	40	10	
SM66625	**ST90 AP10 D32 W32 L150 Z04-H**	✓	**32**	**32**	**4**	**150**	**40**	**10**	
SM24113	ST90 AP10 D32 C32 L300 Z04	-	32	32	4	300	230	10	
SM12301	ST90 AP10 D35 W32 L120 Z05	-	35	32	5	120	30	10	
SM12158	ST90 AP10 D40 W32 L120 Z05	-	40	32	5	120	30	10	
SM12462	ST90 AP10 D40 W32 L150 Z05	-	40	32	5	150	40	10	

*Suitable Insert brand is ISO

SMOXH® CUTTING TOOLS
Kalitenin Yükselen Gücü

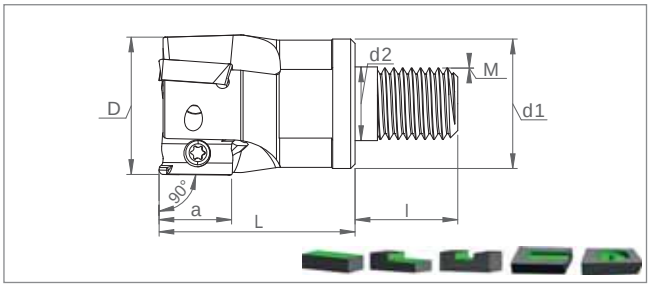

Ordering Code	Item Designation	Dimensions (mm)									Master Insert*
	MT90 APKT 1003.. ISO		*D*	*Z*	*d1*	*d2*	*L*	*l*	*M*	*a*	
SM15586	MT90 AP10 D16 M08 L25 Z02-H	✓	16	2	15	8.5	25	17	8	10	APKT 1003..
SM15593	MT90 AP10 D20 M10 L30 Z03-H	✓	20	3	18	10.5	30	19	10	10	
SM15609	MT90 AP10 D25 M12 L35 Z03-H	✓	25	3	21	12.5	35	23	12	10	
SM15616	MT90 AP10 D32 M16 L43 Z04-H	✓	32	4	29	17	43	23	16	10	
SM15623	MT90 AP10 D40 M16 L43 Z05-H	✓	40	5	29	17	43	23	16	10	
SM15630	MT90 AP10 D42 M16 L43 Z05-H	✓	42	5	29	17	43	23	16	10	

Size Designation	Master Insert*	Spare Parts		
		Screw	Torx Key	Screw Torque Value
				N·m
D12 - D14	APKT 1003..	SSV M2.5x5-9504	STK-T08-9908	1,0
D16 - D42		SSV M2.5x6-9505		

*Suitable Insert brand is ISO

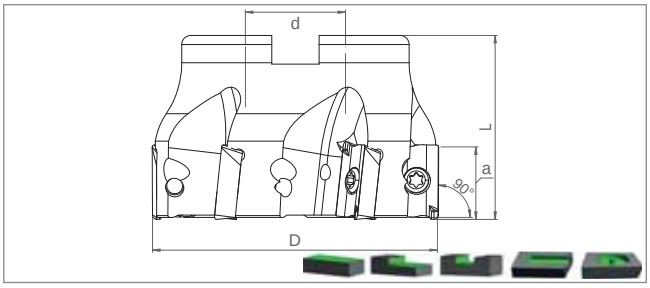

Ordering Code	Item Designation	Dimensions (mm)						Master Insert*
	TK90 APKT 1003.. ISO		*D*	*Z*	*d*	*L*	*a*	
SM29309	TK90 AP10 D40 A16 Z05-H	✓	40	5	16	40	10	APKT 1003..
SM29293	TK90 AP10 D50 A22 Z06-H	✓	50	6	22	40	10	
SM29286	TK90 AP10 D63 A22 Z07-H	✓	63	7	22	40	10	
SM29279	TK90 AP10 D80 A27 Z08-H	✓	80	8	27	50	10	
SM29262	TK90 AP10 D100 A32 Z09-H	✓	100	9	32	50	10	
SM13988	TK90 AP10 D125 B40 Z11	-	125	11	40	63	10	

Cooling mounting screw is optional / See Page "526" for cooling mounting screws.
İçten su vermeli montaj vidaları opsiyoneldir. / Bkz. Sayfa "526" İçten su vermeli montaj vidaları için.

Size Designation	Master Insert*	Spare Parts		
		Screw	Torx Key	Screw Torque Value
				N·m
D40 - D125	APKT 1003..	SSV M2.5x6-9505	STK-T08-9908	1,0

*Suitable Insert brand is ISO

SMOXH CUTTING TOOLS
Kalitenin Yükselen Gücü

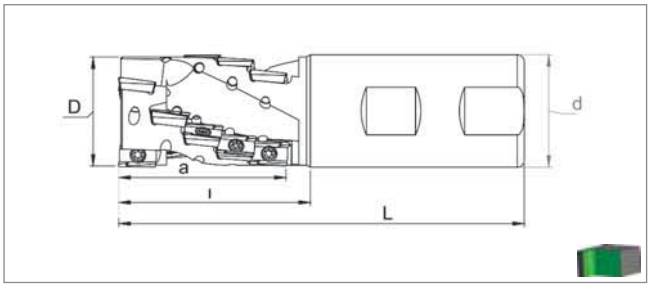

Ordering Code	Item Designation	Dimensions (mm)								Master Insert*
	HT90 APKT 1003.. HELICAL CUTTER ISO		*D*	*Z*	*Z1*	*d*	*L*	*l*	*a*	
SM15777	HT90 AP10 D20 W20 L87 A20 Z06	-	20	2	6	20	87	40	28	APKT 1003..
SM15784	HT90 AP10 D25 W25 L105 Z08-H	✓	25	2	8	25	105	45	38	
SM15791	HT90 AP10 D32 W32 L115 Z15-H	✓	32	3	15	32	115	55	47	
SM15807	HT90 AP10 D40 W32 L130 Z18-H	✓	40	3	18	32	130	75	55	

Size Designation	Master Insert*	Spare Parts		
		Screw	Torx Key	Screw Torque Value
				N·m
D20 - D40	APKT 1003..	SSV M2.5x6-9505	STK-T08-9908	1,0

Milling Tools

Size Designation	Master Insert*	Spare Parts		
		Screw	Torx Key	Screw Torque Value
				N·m
D60 - D90	APKT 1604..	SSV M4x9x5-9528	STK-T15-9910	3,0

*Suitable Insert brand is ISO

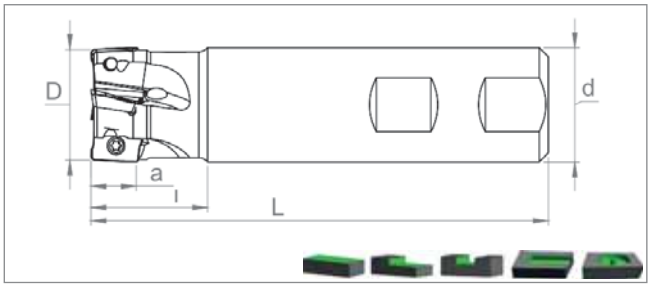

Ordering Code	Item Designation	Dimensions (mm)							Master Insert*
	ST90 APKT 1604.. ISO		*D*	*d*	*Z*	*L*	*l*	*a*	
SM12783	ST90 AP16 D25 W25 L120 Z02	-	25	25	2	120	30	16	
SM57043	ST90 AP16 D25 W25 L120 Z02-H	✓	25	25	2	120	30	16	
SM12875	ST90 AP16 D25 W25 L150 Z02	-	25	25	2	150	40	16	
SM57050	ST90 AP16 D25 W25 L150 Z02-H	✓	25	25	2	150	40	16	
SM12929	ST90 AP16 D25 C25 L200 Z02	-	25	25	2	200	50	16	
SM24137	ST90 AP16 D25 C25 L250 Z02	-	25	25	2	250	180	16	
SM12790	ST90 AP16 D26 W25 L120 Z02	-	26	25	2	120	30	16	
SM57067	ST90 AP16 D26 W25 L120 Z02-H	✓	26	25	2	120	30	16	
SM12950	ST90 AP16 D26 W25 L150 Z02	-	26	25	2	150	30	16	
SM13001	ST90 AP16 D26 C25 L200 Z02	-	26	25	2	200	30	16	
SM12806	ST90 AP16 D28 W25 L120 Z02	-	28	25	2	120	35	16	
SM12967	ST90 AP16 D28 W25 L150 Z02	-	28	25	2	150	35	16	
SM13018	ST90 AP16 D28 C25 L200 Z02	-	28	25	2	200	40	16	
SM12868	ST90 AP16 D30 W25 L120 Z03	-	30	25	3	120	35	16	
SM57074	ST90 AP16 D30 W25 L120 Z03-H	✓	30	25	3	120	35	16	
SM12882	ST90 AP16 D30 W25 L150 Z03	-	30	25	3	150	35	16	
SM12769	ST90 AP16 D30 C25 L200 Z03	-	30	25	3	200	40	16	
SM13032	ST90 AP16 D32 W25 L120 Z03	-	32	25	3	120	35	16	
SM12813	ST90 AP16 D32 W32 L120 Z03	-	32	32	3	120	30	16	APKT 1604..
SM57081	ST90 AP16 D32 W32 L120 Z03-H	✓	32	32	3	120	30	16	
SM12899	ST90 AP16 D32 W32 L150 Z03	-	32	32	3	150	40	16	
SM12974	ST90 AP16 D32 W25 L150 Z03	-	32	25	3	150	35	16	
SM12752	ST90 AP16 D32 C32 L200 Z03	-	32	32	3	200	50	16	
SM24120	ST90 AP16 D32 C32 L250 Z03	-	32	32	3	250	180	16	
SM24106	ST90 AP16 D32 C32 L300 Z03	-	32	32	3	300	230	16	
SM12820	ST90 AP16 D34 W32 L120 Z03	-	34	32	3	120	30	16	
SM12981	ST90 AP16 D34 W32 L150 Z03	-	34	32	3	150	30	16	
SM13025	ST90 AP16 D34 C32 L200 Z03	-	34	32	3	200	30	16	
SM12943	ST90 AP16 D35 W32 L120 Z03	-	35	32	3	120	30	16	
SM12905	ST90 AP16 D35 W32 L150 Z03	-	35	32	3	150	40	16	
SM12936	ST90 AP16 D35 C32 L200 Z03	-	35	32	3	200	30	16	
SM12837	ST90 AP16 D36 W32 L120 Z03	-	36	32	3	120	30	16	
SM12844	ST90 AP16 D38 W32 L120 Z04	-	38	32	4	120	40	16	
SM12851	ST90 AP16 D40 W32 L120 Z04	-	40	32	4	120	40	16	
SM12998	ST90 AP16 D40 W25 L150 Z04	-	40	25	4	150	40	16	
SM12912	ST90 AP16 D40 W32 L150 Z04	-	40	32	4	150	40	16	
SM12776	ST90 AP16 D40 C32 L200 Z04	-	40	32	4	200	40	16	

Size Designation	Master Insert*	Spare Parts		
		Screw	Torx Key	Screw Torque Value
				N·m
D25 - D35	APKT 1604..	SSV M4x9x5-9528	STK-T15-9910	2,7
D36 - D40				

*Suitable Insert brand is ISO

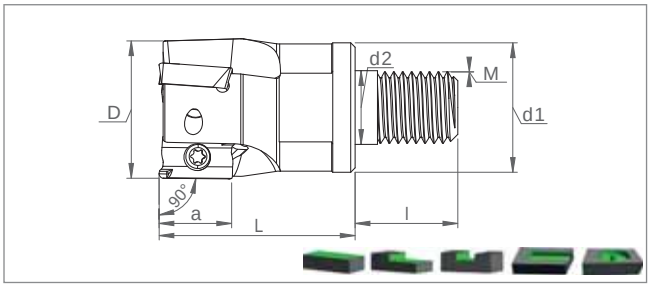

Ordering Code	Item Designation	Dimensions (mm)									Master Insert*
	MT90 APKT 1604.. ISO		*D*	*Z*	*d1*	*d2*	*L*	*l*	*M*	*a*	
SM23833	MT90 AP16 D25 M12 L35 Z02-H	✓	25	2	21	12.5	35	23	12	16	APKT 1604..
SM64416	**MT90 AP16 D30 M16 L43 Z03-H**	✓	**30**	**3**	**29**	**17**	**43**	**23**	**16**	**16**	
SM23840	MT90 AP16 D32 M16 L43 Z03-H	✓	32	3	29	17	43	23	16	16	
SM23857	MT90 AP16 D40 M16 L43 Z04-H	✓	40	4	29	17	43	23	16	16	
SM23864	MT90 AP16 D42 M16 L43 Z04-H	✓	42	4	29	17	43	23	16	16	

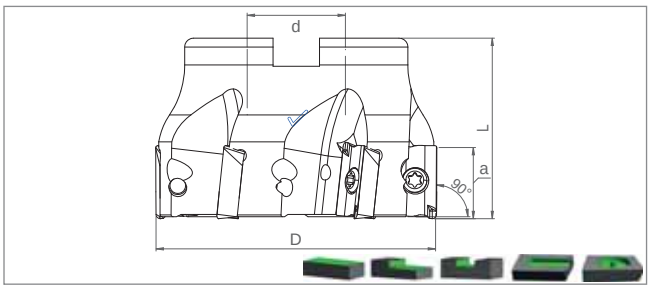

Ordering Code	Item Designation	Dimensions (mm)						Master Insert*
	TK90 APKT 1604.. ISO		*D*	*Z*	*d*	*L*	*a*	
SM29255	TK90 AP16 D40 A16 Z04-H	✓	40	4	16	40	16	APKT 1604..
SM29248	TK90 AP16 D50 A22 Z05-H	✓	50	5	22	40	16	
SM29231	TK90 AP16 D63 A22 Z06-H	✓	63	6	22	40	16	
SM29224	TK90 AP16 D80 A27 Z07-H	✓	80	7	27	50	16	
SM29217	TK90 AP16 D100 A32 Z08-H	✓	100	8	32	50	16	
SM14091	TK90 AP16 D125 B40 Z09	-	125	9	40	63	16	
SM14107	TK90 AP16 D160 C40 Z10	-	160	10	40	63	16	
SM14114	TK90 AP16 D200 C60 Z12	-	200	12	60	63	16	
SM63754	**TK90 AP16 D315 D60 Z16**	**-**	**315**	**16**	**60**	**63**	**16**	

Cooling mounting screw is optional / See Page "526" for cooling mounting screws.
İçten su vermeli montaj vidaları opsiyoneldir. / Bkz. Sayfa "526" İçten su vermeli montaj vidaları için.

Size Designation	Master Insert*	Spare Parts		
		Screw	Torx Key	Screw Torque Value
				N·m
D25 - D200	APKT 1604..	SSV M4x9x5-9528	STK-T15-9910	3,0

*Suitable Insert brand is ISO

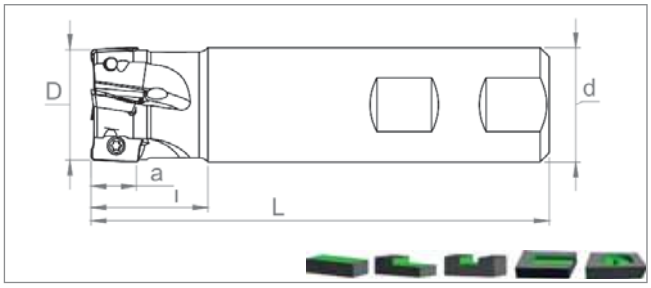

Ordering Code	Item Designation	Dimensions (mm)							Master Insert*
	ST90 APMT 0602.. - 11T3		*D*	*d*	*Z*	*L*	*l*	*a*	
SM35232	ST90 AP06 D10 C10 L120 Z02	-	10	10	2	120	30	6	APMT 0602..
SM35249	ST90 AP06 D12 C12 L120 Z02	-	12	12	2	120	30	6	
SM12547	ST90 AP11 D16 W16 L120 Z02	-	16	16	2	120	30	11	APMT 11T3..
SM51713	ST90 AP11 D16 W16 L120 Z02-H	✓	16	16	2	120	30	11	
SM12592	ST90 AP11 D16 W16 L150 Z02	-	16	16	2	150	40	11	
SM51744	ST90 AP11 D16 W16 L150 Z02-H	✓	16	16	2	150	40	11	
SM12615	ST90 AP11 D16 C16 L200 Z02	-	16	16	2	200	50	11	
SM12554	ST90 AP11 D20 W20 L120 Z03	-	20	20	3	120	30	11	
SM51720	ST90 AP11 D20 W20 L120 Z03-H	✓	20	20	3	120	30	11	
SM12608	ST90 AP11 D20 W20 L150 Z03	-	20	20	3	150	40	11	
SM51751	ST90 AP11 D20 W20 L150 Z03-H	✓	20	20	3	150	40	11	
SM12530	ST90 AP11 D20 C20 L200 Z03	-	20	20	3	200	50	11	
SM12561	ST90 AP11 D25 W25 L120 Z03	-	25	25	3	120	30	11	
SM51737	ST90 AP11 D25 W25 L120 Z03-H	✓	25	25	3	120	30	11	
SM12622	ST90 AP11 D25 W25 L150 Z03	-	25	25	3	150	40	11	
SM51768	ST90 AP11 D25 W25 L150 Z03-H	✓	25	25	3	150	40	11	
SM12660	ST90 AP11 D25 C25 L200 Z03	-	25	25	3	200	50	11	
SM12578	ST90 AP11 D26 W25 L120 Z03	-	26	25	3	120	30	11	
SM12639	ST90 AP11 D26 W25 L150 Z03	-	26	25	3	150	30	11	
SM12677	ST90 AP11 D26 C25 L200 Z03	-	26	25	3	200	30	11	
SM12585	ST90 AP11 D32 W32 L120 Z04	-	32	32	4	120	30	11	
SM12653	ST90 AP11 D32 W32 L150 Z04	-	32	32	4	150	40	11	
SM12684	ST90 AP11 D32 C32 L200 Z04	-	32	32	4	200	50	11	

Size Designation	Master Insert*	Spare Parts		
		Screw	Torx Key	Screw Torque Value N·m
D10 - D12	APMT 0602..	SSV M1.8x4-9501	STK-T06-9906	0,4
D16 - D32	APMT 11T3..	SSV M2.5x6-9505	STK-T08-9908	1,0

*Suitable Insert brand is KRLY

SMOXH® CUTTING TOOLS
Kalitenin Yükselen Gücü

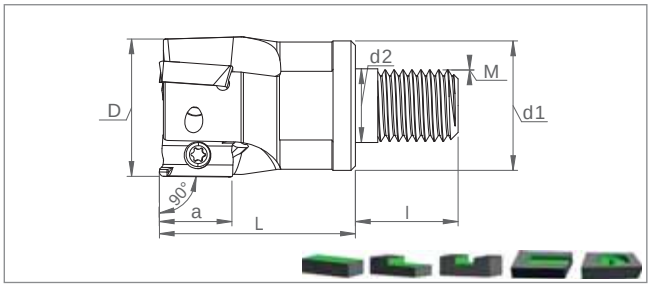

Ordering Code	Item Designation	Dimensions (mm)									Master Insert*
	MT90 APMT 11T3..		*D*	*Z*	*d1*	*d2*	*L*	*l*	*M*	*a*	
SM51928	MT90 AP11 D16 M08 L25 Z02-H	✓	16	2	15	8.5	25	17	8	11	APMT 11T3..
SM51935	MT90 AP11 D20 M10 L30 Z03-H	✓	20	3	18	10.5	30	19	10	11	
SM51942	MT90 AP11 D25 M12 L35 Z04-H	✓	25	4	21	12.5	35	23	12	11	

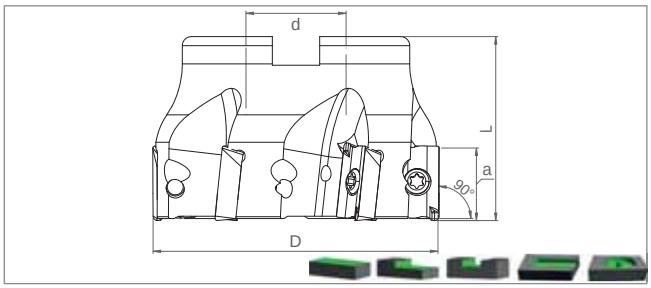

Ordering Code	Item Designation	Dimensions (mm)						Master Insert*
	TK90 APMT 11T3..		*D*	*Z*	*d*	*L*	*a*	
SM46122	TK90 AP11 D40 A16 Z05-H	✓	40	5	16	40	11	APMT 11T3..
SM46139	TK90 AP11 D50 A22 Z06-H	✓	50	6	22	40	11	
SM46146	TK90 AP11 D63 A22 Z07-H	✓	63	7	22	40	11	
SM46153	TK90 AP11 D80 A27 Z08-H	✓	80	8	27	50	11	

Cooling mounting screw is optional / See Page "526" for cooling mounting screws.
İçten su vermeli montaj vidaları opsiyoneldir. / Bkz. Sayfa "526" İçten su vermeli montaj vidaları için.

Size Designation	Master Insert*	Spare Parts		
		Screw	Torx Key	Screw Torque Value
D16 - D25	APMT 11T3..	SSV M2.5x6-9505	STK-T08-9908	1,0
D40 - D80		SSV M2.5x7-9506		

*Suitable Insert brand is KRLY

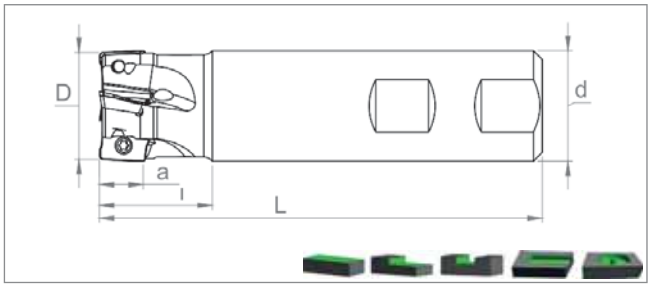

Ordering Code	Item Designation	Dimensions (mm)							Master Insert*
	ST90 APMT 1135..		*D*	*d*	*Z*	*L*	*l*	*a*	
SM51775	ST90 APMT11 D16 W16 L120 Z02-H	✓	16	16	2	120	30	11	APMT 1135..
SM47648	ST90 APMT11 D16 W16 L150 Z02-H	✓	16	16	2	150	40	11	
SM01231	ST90 APMT11 D16 C16 L200 Z02	-	16	16	2	200	50	11	
SM51812	ST90 APMT11 D17 W16 L150 Z02-H	✓	17	16	2	150	30	11	
SM51867	ST90 APMT11 D17 C16 L200 Z02	-	17	16	2	200	30	11	
SM51782	ST90 APMT11 D18 W16 L120 Z02-H	✓	18	16	2	120	30	11	
SM51829	ST90 APMT11 D18 W16 L150 Z02-H	✓	18	16	2	150	30	11	
SM51799	ST90 APMT11 D20 W20 L120 Z03-H	✓	20	20	3	120	30	11	
SM47655	ST90 APMT11 D20 W20 L150 Z03-H	✓	20	20	3	150	40	11	
SM51874	ST90 APMT11 D20 C20 L200 Z03	-	20	20	3	200	50	11	
SM51836	ST90 APMT11 D21 W20 L150 Z03-H	✓	21	20	3	150	30	11	
SM51881	ST90 APMT11 D21 C20 L200 Z03	-	21	20	3	200	30	11	
SM51805	ST90 APMT11 D25 W25 L120 Z04-H	✓	25	25	4	120	30	11	
SM47662	ST90 APMT11 D25 W25 L150 Z04-H	✓	25	25	4	150	40	11	
SM51898	ST90 APMT11 D25 C25 L200 Z04	-	25	25	4	200	50	11	
SM51843	ST90 APMT11 D26 W25 L150 Z04-H	✓	26	25	4	150	30	11	
SM51904	ST90 APMT11 D26 C25 L200 Z04	-	26	25	4	200	30	11	

Size Designation	Master Insert*	Spare Parts		
		Screw	Torx Key	Screw Torque Value
				N·m
D16 - D26	APMT 1135..	SSV M2.5x6-9505	STK-T08-9908	1,0

*Suitable Insert brand is YG-1

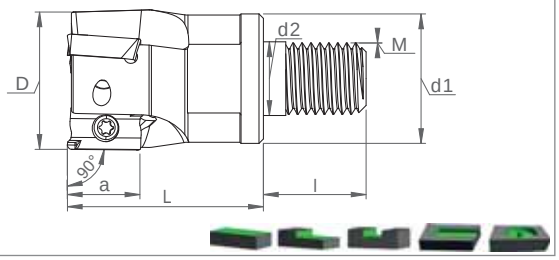

Ordering Code	Item Designation	Dimensions (mm)									Master Insert*
	MT90 APMT 1135..		*D*	*Z*	*d1*	*d2*	*L*	*l*	*M*	*a*	
SM47709	MT90 APMT11 D16 M08 L25 Z02-H	✓	16	2	15	8.5	25	17	8	11	APMT 1135..
SM47716	MT90 APMT11 D20 M10 L30 Z03-H	✓	20	3	18	10.5	30	19	10	11	
SM47723	MT90 APMT11 D25 M12 L35 Z04-H	✓	25	4	21	12.5	35	23	12	11	
SM00876	MT90 APMT11 D32 M16 L43 Z04-H	✓	32	4	29	17	43	23	16	16	

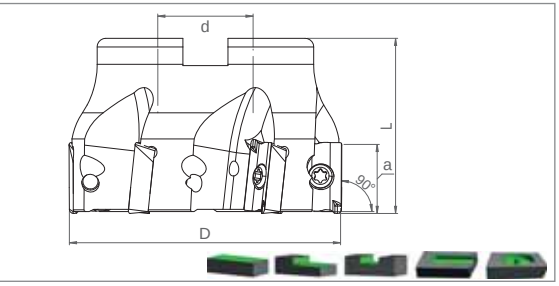

Ordering Code	Item Designation	Dimensions (mm)						Master Insert*
	TK90 APMT 1135..		*D*	*Z*	*d*	*L*	*a*	
SM47679	TK90 APMT11 D40 A16 Z05-H	✓	40	5	16	40	11	APMT 1135..
SM47686	TK90 APMT11 D50 A22 Z06-H	✓	50	6	22	40	11	
SM50181	TK90 APMT11 D63 A22 Z07-H	✓	63	7	22	40	11	
SM50198	TK90 APMT11 D80 A27 Z08-H	✓	80	8	27	50	11	

Cooling mounting screw is optional / See Page “526” for cooling mounting screws.
İçten su vermeli montaj vidaları opsiyoneldir. / Bkz. Sayfa “526” İçten su vermeli montaj vidaları için.

Size Designation	Master Insert*	Spare Parts		
		Screw	Torx Key	Screw Torque Value
				N·m
D16 - D32	APMT 1135..	SSV M2.5x6-9505	STK-T08-9908	1,0
D40 - D80		SSV M2.5x7-9506		

*Suitable Insert brand is YG-1

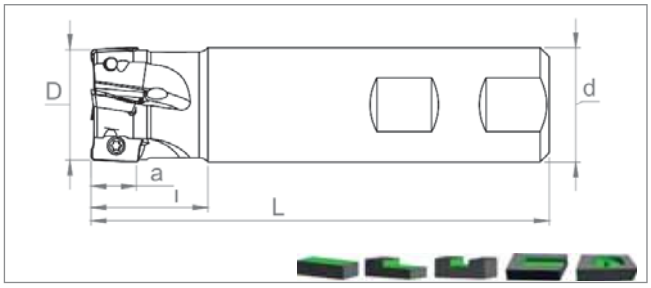

Ordering Code	Item Designation	Dimensions (mm)							Master Insert*
ST90 APKT 09T3.. - 1204.. / 1705..			*D*	*d*	*Z*	*L*	*l*	*a*	
SM32637	ST90 AP09T3 D16 W16 L150 Z02-H	✓	16	16	2	150	40	8.8	APKT 09T3..
SM32644	ST90 AP09T3 D16 C16 L200 Z02	-	16	16	2	200	50	8.8	
SM32620	ST90 AP09T3 D20 W20 L150 Z03-H	✓	20	20	3	150	40	8.8	
SM32651	ST90 AP09T3 D20 C20 L200 Z03	-	20	20	3	200	50	8.8	
SM12691	ST90 AP12 D20 W20 L150 Z02	-	20	20	2	150	40	12	APKT 1204..
SM12707	ST90 AP12 D21 W20 L150 Z02	-	21	20	2	150	30	12	
SM12721	ST90 AP12 D21 C20 L200 Z02	-	21	20	2	200	30	12	
SM12714	ST90 AP12 D25 W25 L150 Z03	-	25	25	3	150	40	12	
SM12738	ST90 AP12 D26 C25 L200 Z03	-	26	25	3	200	30	12	
SM12646	ST90 AP12 D32 W32 L150 Z04	-	32	32	4	150	40	12	
SM13049	ST90 AP17 D25 W25 L120 Z02	-	25	25	2	120	30	16	APKT 1705..
SM01552	**ST90 AP17 D25 C25 L200 Z02**	**-**	**25**	**25**	**2**	**200**	**40**	**16**	
SM13063	ST90 AP17 D26 C25 L200 Z02	-	26	25	2	200	30	16	
SM13070	ST90 AP17 D26 C25 L250 Z02	-	26	25	2	250	50	16	
SM13087	ST90 AP17 D30 C25 L300 Z02	-	30	25	2	300	50	16	
SM13056	ST90 AP17 D32 W32 L150 Z03	-	32	32	3	150	40	16	
SM00814	**ST90 AP17 D32 C32 L200 Z03**	**-**	**32**	**32**	**3**	**200**	**40**	**16**	
SM01569	**ST90 AP17 D40 C32 L200 Z04**	**-**	**40**	**32**	**4**	**200**	**40**	**16**	

Size Designation	Master Insert*	Spare Parts		
		Screw	Torx Key	Screw Torque Value N·m
D16	APKT 09T3..**	SSV M2.5x5-9504	STK-T08-9908	1,0
D20		SSV M2.5x6-9505		
D20 - D32	APKT 1204..**	SSV M3.5x8-SC-9513	STK-T10-9909	2,7
D25 - D40	APKT 1705..**	SSV M4x10-9514	STK-T15-9910	3,0

**Body corners should be modified for R2 and more radius inserts / R2 ve üstü radyüslü uçlarda takımın modifiye edilmesi gerekmektedir.

*Suitable Insert brand is TGTC

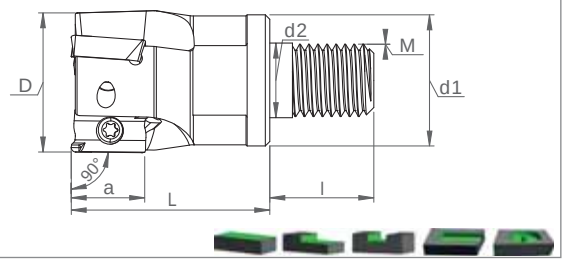

Ordering Code	Item Designation	Dimensions (mm)									Master Insert*
MT90 APKT 09T3.. - 1204..			*D*	*Z*	*d1*	*d2*	*L*	*l*	*M*	*a*	
SM56138	MT90 AP09 D16 M08 L25 Z02-H	✓	16	2	15	8.5	25	17	8	8.8	APKT 09T3..
SM56145	MT90 AP09 D20 M10 L30 Z03-H	✓	20	3	18	10.5	30	19	10	8.8	
SM56329	MT90 AP12 D20 M10 L30 Z02-H	✓	20	2	18	10.5	30	19	10	12	APKT 1204..
SM56336	MT90 AP12 D25 M12 L35 Z03-H	✓	25	3	21	12.5	35	23	12	12	
SM56343	MT90 AP12 D32 M16 L43 Z04-H	✓	32	4	29	17	43	23	16	12	

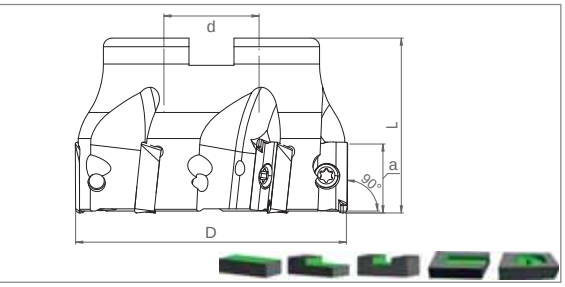

Ordering Code	Item Designation	Dimensions (mm)						Master Insert*
TK90 APKT 1204.. / 1705..			*D*	*Z*	*d*	*L*	*a*	
SM54240	TK90 AP12 D40 A16 Z05-H	✓	40	5	16	40	12	APKT 1204..
SM54257	TK90 AP12 D50 A22 Z06-H	✓	50	6	22	40	12	
SM54264	TK90 AP12 D63 A22 Z07-H	✓	63	7	22	40	12	
SM28852	TK90 AP17 D50 A22 Z05-H	✓	50	5	22	40	16	APKT 1705..
SM28845	TK90 AP17 D63 A22 Z06-H	✓	63	6	22	40	16	
SM28838	TK90 AP17 D80 A27 Z07-H	✓	80	7	27	50	16	
SM28821	TK90 AP17 D100 A32 Z09-H	✓	100	9	32	50	16	

Cooling mounting screw is optional / See Page “526” for cooling mounting screws.
İçten su vermeli montaj vidaları opsiyoneldir. / Bkz. Sayfa “526” İçten su vermeli montaj vidaları için.

Size Designation	Master Insert*	Spare Parts		
		Screw	Torx Key	Screw Torque Value
D16	APKT 09T3..**	SSV M2.5x5-9504	STK-T08-9908	1,0
D20		SSV M2.5x6-9505		
D20 - D63	APKT 1204..**	SSV M3.5x8-SC-9513	STK-T10-9909	2,7
D50 - D100	APKT 1705..**	SSV M4x10-9514	STK-T15-9910	3,0

**Body corners should be modified for R2 and more radius inserts / R2 ve üstü radyüslü uçlarda takımın modifiye edilmesi gerekmektedir.
*Suitable Insert brand is TGTC

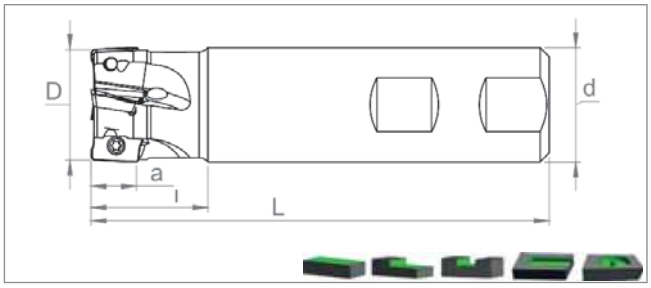

Ordering Code	Item Designation	Dimensions (mm)							Master Insert*
	ST90 APKT 11T3..		*D*	*d*	*Z*	*L*	*l*	*a*	
SM44159	ST90 APKT11 D16 W16 L150 Z02-H	✓	16	16	2	150	40	11	APKT 11T3..
SM49697	ST90 APKT11 D17 W16 L150 Z02-H	✓	17	16	2	150	30	11	
SM44166	ST90 APKT11 D20 W20 L150 Z03-H	✓	20	20	3	150	40	11	
SM49703	ST90 APKT11 D21 W20 L150 Z03-H	✓	21	20	3	150	30	11	
SM44173	ST90 APKT11 D25 W25 L150 Z04-H	✓	25	25	4	150	40	11	
SM49710	ST90 APKT11 D26 W25 L150 Z04-H	✓	26	25	4	150	30	11	
SM44180	ST90 APKT11 D32 W32 L150 Z04-H	✓	32	32	4	150	40	11	

Size Designation	Master Insert*	Spare Parts		
		Screw	Torx Key	Screw Torque Value N·m
D16 - D32	APKT 11T3..	SSV M2.5x6-9505	STK-T08-9908	1,0

*Suitable Insert brand is ZCC-CT

SMOXH® CUTTING TOOLS
Kalitenin Yükselen Gücü

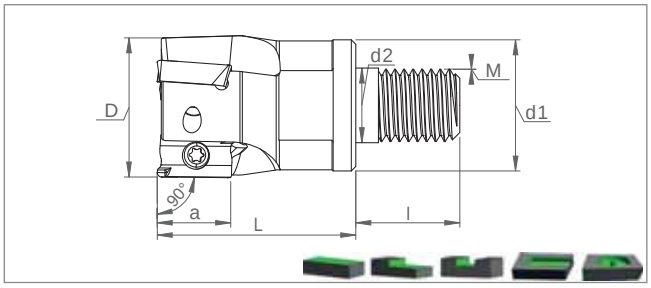

Ordering Code	Item Designation	Dimensions (mm)									Master Insert*
	MT90 APKT 11T3..		*D*	*Z*	*d1*	*d2*	*L*	*l*	*M*	*a*	
SM46344	MT90 APKT11 D16 M08 L25 Z02-H	✓	16	2	15	8.5	25	17	8	11	APKT 11T3..
SM46351	MT90 APKT11 D20 M10 L30 Z03-H	✓	20	3	18	10.5	30	19	10	11	
SM46368	MT90 APKT11 D25 M12 L35 Z04-H	✓	25	4	21	12.5	35	23	12	11	

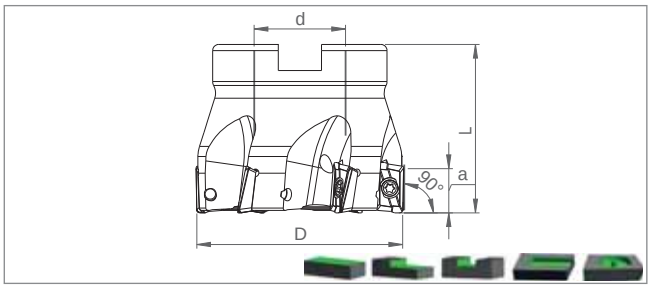

Ordering Code	Item Designation	Dimensions (mm)						Master Insert*
	TK90 APKT 11T3..		*D*	*Z*	*d*	*L*	*a*	
SM44883	TK90 APKT11 D40 A16 Z05-H	✓	40	5	16	40	11	APKT 11T3..
SM44890	TK90 APKT11 D50 A22 Z06-H	✓	50	6	22	40	11	
SM44906	TK90 APKT11 D63 A22 Z07-H	✓	63	7	22	40	11	

Cooling mounting screw is optional / See Page “526” for cooling mounting screws.
İçten su vermeli montaj vidaları opsiyoneldir. / Bkz. Sayfa “526” İçten su vermeli montaj vidaları için.

Size Designation	Master Insert*	Spare Parts		
		Screw	Torx Key	Screw Torque Value
				N·m
D16 - D25	APKT 11T3..	SSV M2.5x6-9505	STK-T08-9908	1,0
D40 - D63		SSV M2.5x7-9506		

*Suitable Insert brand is ZCC-CT

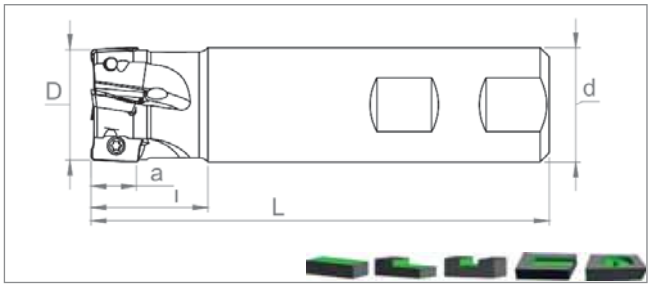

Ordering Code	Item Designation	Dimensions (mm)							Master Insert*
ST90 R390.0702.. / R390.11T3.. / R390.1704			*D*	*d*	*Z*	*L*	*l*	*a*	
SM58101	ST90 R390.07 D10 W10 L100 Z02-H	✓	10	10	2	100	25	5.8	R390-0702..
SM58118	ST90 R390.07 D12 W12 L100 Z02-H	✓	12	12	2	100	25	5.8	
SM58125	ST90 R390.07 D14 W12 L100 Z03-H	✓	14	12	3	100	25	5.8	
SM58132	ST90 R390.07 D16 W16 L110 Z04-H	✓	16	16	4	110	30	5.8	
SM29873	ST90 R390.11 D16 W16 L100 Z02-H	✓	16	16	2	100	30	10	R390-11T3..
SM13780	ST90 R390.11 D16 W16 L150 Z02	-	16	16	2	150	40	10	
SM13797	ST90 R390.11 D16 W16 L150 Z02-H	✓	16	16	2	150	40	10	
SM13759	ST90 R390.11 D20 W20 L100 Z03-H	✓	20	20	3	100	30	10	
SM27053	ST90 R390.11 D20 W20 L110 Z03-H	✓	20	20	3	110	30	10	
SM13803	ST90 R390.11 D20 W20 L150 Z03	-	20	20	3	150	40	10	
SM13810	ST90 R390.11 D20 W20 L150 Z03-H	✓	20	20	3	150	40	10	
SM37885	ST90 R390.11 D25 W25 L100 Z03-H	✓	25	25	3	100	30	10	
SM13827	ST90 R390.11 D25 W25 L150 Z03	-	25	25	3	150	40	10	
SM13858	ST90 R390.11 D25 W25 L150 Z03-H	✓	25	25	3	150	40	10	
SM13834	ST90 R390.17 D25 W25 L150 Z02	-	25	25	2	150	40	15.7	R390-1704..
SM13865	ST90 R390.17 D25 W25 L150 Z02-H	✓	25	25	2	150	40	15.7	
SM13841	ST90 R390.17 D30 W25 L150 Z03	-	30	25	3	150	30	15.7	
SM13872	ST90 R390.17 D30 W25 L150 Z03-H	✓	30	25	3	150	30	15.7	

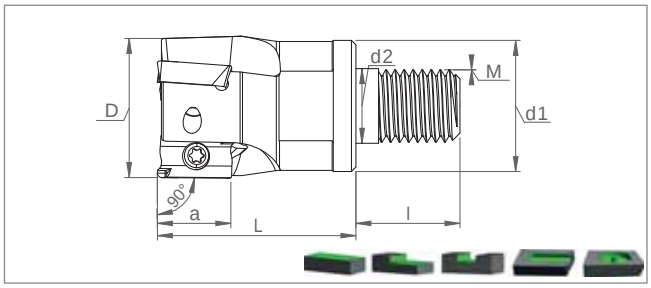

Ordering Code	Item Designation	Dimensions (mm)								Master Insert*
MT90 R390.11T3..			*D*	*Z*	*d1*	*d2*	*L*	*l*	*M*	*a*	
SM23871	MT90 R390.11 D16 M08 L25 Z02-H	✓	16	2	15	8.5	25	17	8	10	R390-11T3..
SM23888	MT90 R390.11 D20 M10 L30 Z03-H	✓	20	3	18	10.5	30	19	10	10	
SM23895	MT90 R390.11 D25 M12 L35 Z03-H	✓	25	3	21	12.5	35	23	12	10	
SM23918	MT90 R390.11 D32 M16 L43 Z04-H	✓	32	4	29	17	43	23	16	10	

Size Designation	Master Insert*	Spare Parts		
		Screw	Torx Key	Screw Torque Value
				N·m
D10 - D16	R390-0702..	SSV M1.8x4-9501	STK-T06-9906	0,4
D16	R390-11T3..	SSV M2.5x5-9504	STK-T08-9908	1,0
D20 - D32		SSV M2.5x6-9505		
D25 - D30	R390-1704..	SSV M3.5x8-9510	STK-T15-9910	2,7

SMOXH CUTTING TOOLS
Kalitenin Yükselen Gücü

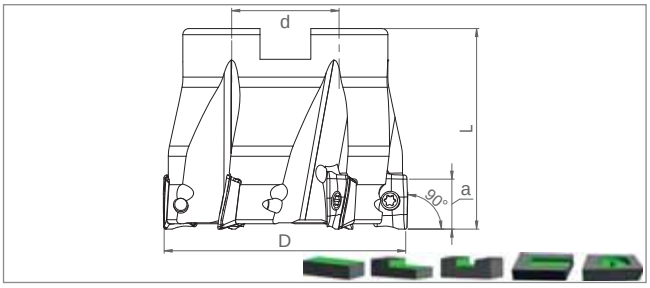

Ordering Code	Item Designation	Dimensions (mm)						Master Insert*
TK90 R390.11T3.. / R390.1704.. / R390.1806..			*D*	*Z*	*d*	*L*	*a*	
SM29156	TK90 R390.11 D40 A16 Z05-H	✓	40	5	16	40	10	R390-11T3..
SM29149	TK90 R390.11 D50 A22 Z06-H	✓	50	6	22	40	10	
SM29132	TK90 R390.11 D63 A22 Z07-H	✓	63	7	22	40	10	
SM29125	TK90 R390.17 D40 A16 Z04-H	✓	40	4	16	40	15.7	R390-1704..
SM29118	TK90 R390.17 D50 A22 Z05-H	✓	50	5	22	40	15.7	
SM29101	TK90 R390.17 D63 A22 Z06-H		63	6	22	40	15.7	
SM29095	TK90 R390.17 D80 A27 Z07-H	✓	80	7	27	50	15.7	
SM29088	TK90 R390.17 D100 A32 Z08-H	✓	100	8	32	50	15.7	
SM14305	TK90 R390.17 D125 B40 Z09	-	125	9	40	63	15.7	
SM50204	TK90 R390.18 D50 A22 Z05-H	✓	50	5	22	40	15.4	R390-1806..
SM50211	TK90 R390.18 D63 A22 Z06-H	✓	63	6	22	40	15.4	
SM50228	TK90 R390.18 D80 A27 Z07-H	✓	80	7	27	50	15.4	
SM50235	TK90 R390.18 D100 A32 Z08-H	✓	100	8	32	50	15.4	
SM54097	TK90 R390.18 D125 B40 Z09	-	125	9	40	63	15.4	
SM54103	TK90 R390.18 D160 C40 Z12	-	160	12	40	63	15.4	

Cooling mounting screw is optional / See Page “526” for cooling mounting screws.
İçten su vermeli montaj vidaları opsiyoneldir. / Bkz. Sayfa “526” İçten su vermeli montaj vidaları için.

Size Designation	Master Insert*	Spare Parts		
		Screw	Torx Key	Screw Torque Value
				N·m
D40 - D63	R390-11T3..	SSV M2.5x7-9506	STK-T08-9908	1,0
D40 - D125	R390-1704..	SSV M3.5x10-9511	STK-T15-9910	2,7
D50 - D63	R390-1806..**	SSV M4x9x5-9528		3,0
D80 - D160				

**Body corners should be modified for R2 and more radius inserts / R2 ve üstü radyüslü uçlarda takımın modifiye edilmesi gerekmektedir.
*Suitable Insert brand is SNDVK

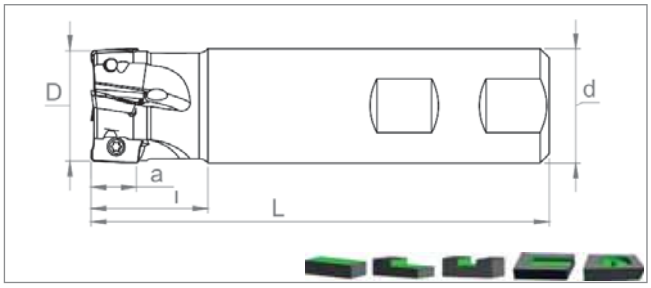

Ordering Code	Item Designation	Dimensions (mm)							Master Insert*
	ST90 ASMT / ASGT 11T3..		*D*	*d*	*Z*	*L*	*l*	*a*	
SM53670	ST90 AS11 D16 W16 L150 Z02-H	✓	16	16	2	150	40	10.6	AS.T 11T3..
SM53687	ST90 AS11 D20 W20 L150 Z03-H	✓	20	20	3	150	40	10.6	
SM53694	ST90 AS11 D25 W25 L150 Z04-H	✓	25	25	4	150	40	10.6	
SM53700	ST90 AS11 D32 W32 L150 Z05-H	✓	32	32	5	150	40	10.6	

Size Designation	Master Insert*	Spare Parts		
		Screw	Torx Key	Screw Torque Value N·m
D16 - D32	AS.T 11T3..**	SSV M2.5x6-9505	STK-T08-9908	1,0

**Body corners should be modified for R2 and more radius inserts / R2 ve üstü radyüslü uçlarda takımın modifiye edilmesi gerekmektedir.

*Suitable Insert brand is TUNGLY

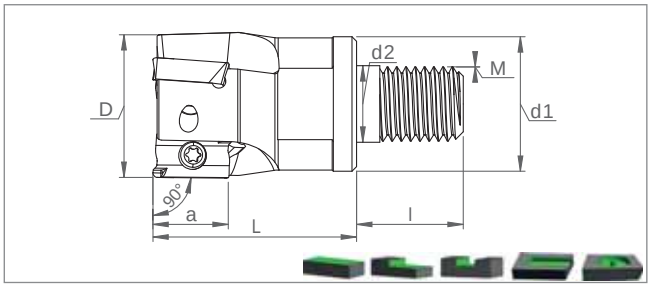

Ordering Code	Item Designation	Dimensions (mm)									Master Insert*
	MT90 ASMT / ASGT 11T3..		*D*	*Z*	*d1*	*d2*	*L*	*l*	*M*	*a*	
SM53717	MT90 AS11 D20 M10 L30 Z03-H	✓	20	3	18	10.5	30	19	10	10.6	AS.T 11T3..
SM53724	MT90 AS11 D25 M12 L35 Z04-H	✓	25	4	21	12.5	35	23	12	10.6	
SM53731	MT90 AS11 D32 M16 L43 Z05-H	✓	32	5	29	17	43	23	16	10.6	

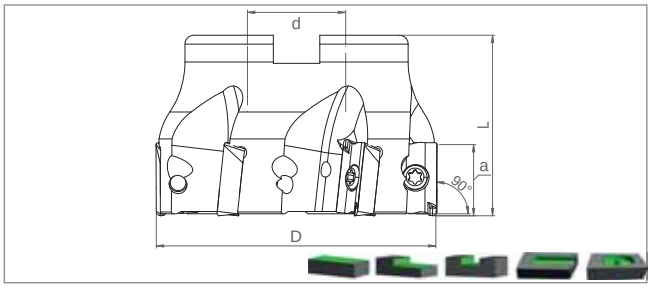

Ordering Code	Item Designation	Dimensions (mm)						Master Insert*
	TK90 ASMT / ASGT 11T3..		*D*	*Z*	*d*	*L*	*a*	
SM52918	TK90 AS11 D40 A16 Z06-H	✓	40	6	16	40	10.6	AS.T 11T3..
SM52925	TK90 AS11 D50 A22 Z07-H	✓	50	7	22	40	10.6	
SM52932	TK90 AS11 D63 A22 Z08-H	✓	63	8	22	40	10.6	

Cooling mounting screw is optional / See Page “526” for cooling mounting screws.
İçten su vermeli montaj vidaları opsiyoneldir. / Bkz. Sayfa “526” İçten su vermeli montaj vidaları için.

Size Designation	Master Insert*	Spare Parts		
		Screw	Torx Key	Screw Torque Value
				N·m
D20 - D32	AS.T 11T3..**	SSV M2.5x6-9505	STK-T08-9908	1,0
D40 - D63		SSV M2.5x7-9506		

**Body corners should be modified for R2 and more radius inserts / R2 ve üstü radyüslü uçlarda takımın modifiye edilmesi gerekmektedir.
*Suitable Insert brand is TUNGLY

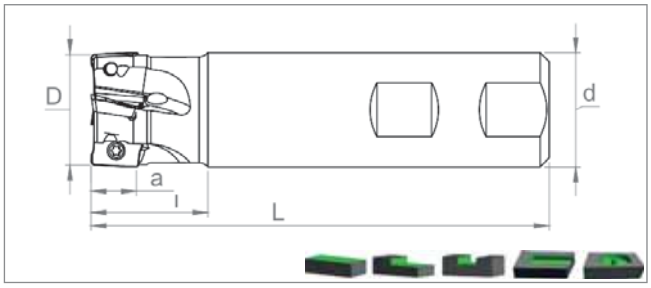

Ordering Code	Item Designation	Dimensions (mm)							Master Insert*
	ST90 BDMT / BDGT 0703.. / 11T3.. / 1704..		*D*	*d*	*Z*	*L*	*l*	*a*	
SM27701	ST90 BD07 D10 C10 L100 Z01	-	10	10	1	100	25	6	BD..0703..
SM27688	ST90 BD07 D10 C10 L100 Z01-H	✓	10	10	1	100	25	6	
SM27718	ST90 BD07 D12 C12 L120 Z02	-	12	12	2	120	30	6	
SM27695	ST90 BD07 D12 C12 L120 Z02-H	✓	12	12	2	120	30	6	
SM54066	ST90 BD11 D16 W16 L100 Z02-H	✓	16	16	2	100	30	10	BD..11T3..
SM37953	ST90 BD11 D16 W16 L150 Z02	-	16	16	2	150	40	10	
SM29811	ST90 BD11 D16 W16 L150 Z02-H	✓	16	16	2	150	40	10	
SM27596	ST90 BD11 D17 W16 L150 Z02-H	✓	17	16	2	150	30	10	
SM27572	ST90 BD11 D17 C16 L200 Z02	-	17	16	2	200	30	10	
SM54073	ST90 BD11 D20 W20 L100 Z03-H	✓	20	20	3	100	30	10	
SM76938	**ST90 BD11 D20 W20 L150 Z02-H**	✓	**20**	**20**	**2**	**150**	**40**	**10**	
SM37960	ST90 BD11 D20 W20 L150 Z03	-	20	20	3	150	40	10	
SM29804	ST90 BD11 D20 W20 L150 Z03-H	✓	20	20	3	150	40	10	
SM27633	ST90 BD11 D21 W20 L150 Z03-H	✓	21	20	3	150	30	10	
SM27619	ST90 BD11 D21 C20 L200 Z03	-	21	20	3	200	30	10	
SM64119	**ST90 BD11 D23 C20 L120 Z03-H**	**-**	**23**	**20**	**3**	**120**	**30**	**10**	
SM54080	ST90 BD11 D25 W25 L100 Z04-H	✓	25	25	4	100	30	10	
SM37977	ST90 BD11 D25 W25 L150 Z04	-	25	25	4	150	40	10	
SM29798	ST90 BD11 D25 W25 L150 Z04-H	✓	25	25	4	150	40	10	
SM27671	ST90 BD11 D26 W25 L150 Z04-H	✓	26	25	4	150	30	10	
SM27657	ST90 BD11 D26 C25 L200 Z04	-	26	25	4	200	30	10	
SM37984	ST90 BD11 D32 W32 L150 Z05-H	✓	32	32	5	150	40	10	
SM35881	ST90 BD17 D25 W25 L150 Z02	-	25	25	2	150	40	15.7	BD..1704..
SM35898	ST90 BD17 D25 W25 L150 Z02-H	✓	25	25	2	150	40	15.7	
SM35911	ST90 BD17 D25 C25 L200 Z02	-	25	25	2	200	50	15.7	
SM35904	ST90 BD17 D32 W32 L150 Z03	-	32	32	3	150	40	15.7	
SM35928	ST90 BD17 D32 C32 L200 Z03	-	32	32	3	200	50	15.7	

Size Designation	Master Insert*	Spare Parts		
		Screw	Torx Key	Screw Torque Value N·m
D10 - D12	BD..0703..	SSV M2x4-9521	STK-T06-9906	0,4
D16 - D17	BD..11T3..	SSV M2.5x5-9504	STK-T08-9908	1,0
D20 - D32		SSV M2.5x6-9505		
D25 - D32	BD..1704..	SSV M4x9x5-9528	STK-T15-9910	3,0

*Suitable Insert brand is KYCR

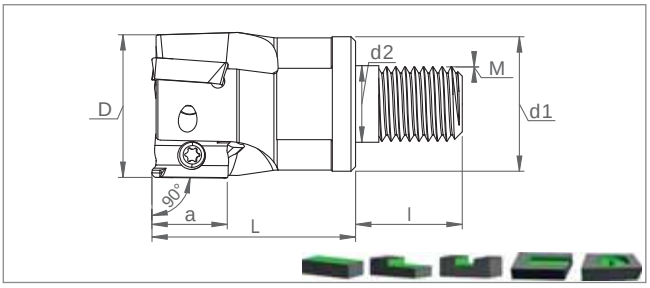

Ordering Code	Item Designation	Dimensions (mm)									Master Insert*
	MT90 BDMT / BDGT 11T3..		*D*	*Z*	*d1*	*d2*	*L*	*l*	*M*	*a*	
SM36543	MT90 BD11 D16 M08 L25 Z02-H	✓	16	2	15	8.5	25	17	8	10	BD..11T3..
SM36550	MT90 BD11 D20 M10 L30 Z03-H	✓	20	3	18	10.5	30	19	10	10	
SM36567	MT90 BD11 D25 M12 L35 Z04-H	✓	25	4	21	12.5	35	23	12	10	
SM36574	MT90 BD11 D32 M16 L43 Z05-H	✓	32	5	29	17	43	23	16	10	

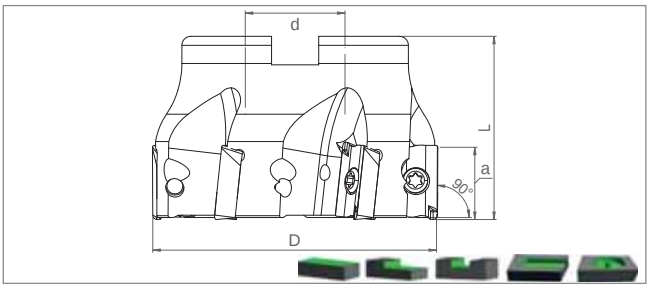

Ordering Code	Item Designation	Dimensions (mm)						Master Insert*
	TK90 BDMT / BDGT 11T3.. / 1704..		*D*	*Z*	*d*	*L*	*a*	
SM52994	TK90 BD11 D40 A16 Z04-H	✓	40	4	16	40	10	BD..11T3..
SM01767	TK90 BD11 D40 A16 Z05-H	✓	40	5	16	40	10	
SM53007	TK90 BD11 D50 A22 Z04-H	✓	50	4	22	40	10	
SM01774	TK90 BD11 D50 A22 Z05-H	✓	50	5	22	40	10	
SM01781	TK90 BD11 D63 A22 Z06-H	✓	63	6	22	40	10	
SM53014	TK90 BD11 D80 A27 Z06-H	✓	80	6	27	50	10	
SM01798	TK90 BD11 D80 A27 Z07-H	✓	80	7	27	50	10	
SM53021	TK90 BD11 D100 A32 Z07-H	✓	100	7	32	50	10	
SM39872	TK90 BD17 D40 A16 Z04-H	✓	40	4	16	40	15.7	BD..1704..
SM31067	TK90 BD17 D50 A22 Z05-H	✓	50	5	22	40	15.7	
SM31074	TK90 BD17 D63 A22 Z06-H	✓	63	6	22	40	15.7	
SM31081	TK90 BD17 D80 A27 Z07-H	✓	80	7	27	50	15.7	
SM54059	TK90 BD17 D100 A32 Z08-H	✓	100	8	32	50	15.7	

Cooling mounting screw is optional / See Page "526" for cooling mounting screws.
İçten su vermeli montaj vidaları opsiyoneldir. / Bkz. Sayfa "526" İçten su vermeli montaj vidaları için.

Size Designation	Master Insert*	Spare Parts		
		Screw	Torx Key	Screw Torque Value N·m
D16	BD..11T3..	SSV M2.5x5-9504	STK-T08-9908	1,0
D20 - D100		SSV M2.5x6-9505		
D40 - D100	BD..1704..	SSV M4x9x5-9528	STK-T15-9910	3,0

*Suitable Insert brand is KYCR

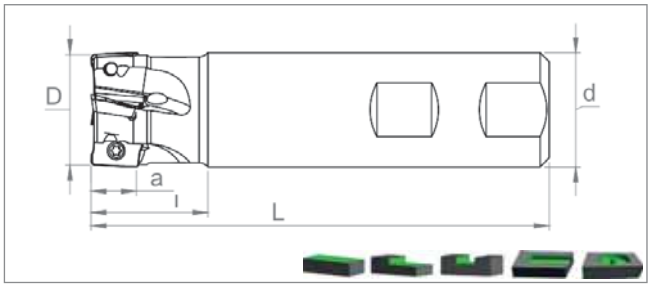

Ordering Code	Item Designation	Dimensions (mm)							Master Insert*
	ST90 AXMT 1235.. / 1705..		*D*	*d*	*Z*	*L*	*l*	*a*	
SM26803	ST90 AX12 D16 W16 L120 Z02	-	16	16	2	120	30	10	AXMT 1235..
SM26810	ST90 AX12 D16 W16 L150 Z02	-	16	16	2	150	40	10	
SM27220	ST90 AX12 D16 C16 L200 Z02	-	16	16	2	200	50	10	
SM27817	ST90 AX12 D20 W20 L110 Z03-H	✓	20	20	3	110	30	10	
SM26902	ST90 AX12 D20 W20 L120 Z03	-	20	20	3	120	30	10	
SM27824	ST90 AX12 D20 W20 L120 Z03-H	✓	20	20	3	120	30	10	
SM13100	ST90 AX12 D20 W20 L150 Z03	-	20	20	3	150	40	10	
SM27800	ST90 AX12 D20 W20 L150 Z03-H	✓	20	20	3	150	40	10	
SM52130	ST90 AX12 D20 C20 L200 Z03	-	20	20	3	200	50	10	
SM27848	ST90 AX12 D25 C20 L120 Z04	-	25	20	4	120	30	10	
SM26827	ST90 AX12 D25 W25 L120 Z04	-	25	25	4	120	30	10	
SM12745	ST90 AX12 D25 W25 L150 Z03	-	25	25	3	150	40	10	
SM39025	ST90 AX12 D25 W25 L150 Z04-H	✓	25	25	4	150	40	10	
SM22225	ST90 AX12 D25 C25 L200 Z04	-	25	25	4	200	50	10	
SM13117	ST90 AX17 D25 W25 L150 Z02	-	25	25	2	150	40	14	AXMT 1705..
SM27077	ST90 AX17 D32 W32 L120 Z03	-	32	32	3	120	30	14	
SM27060	ST90 AX17 D32 W32 L120 Z03-H	✓	32	32	3	120	30	14	
SM22249	ST90 AX17 D32 W32 L150 Z03	-	32	32	3	150	40	14	
SM27084	ST90 AX17 D32 C32 L200 Z03	-	32	32	3	200	50	14	
SM26797	ST90 AX17 D32 C32 L250 Z03	-	32	32	3	250	50	14	
SM27022	ST90 AX17 D40 W32 L150 Z04	-	40	32	4	150	40	14	
SM27039	ST90 AX17 D40 C32 L200 Z04	-	40	32	4	200	40	14	

Size Designation	Master Insert*	Spare Parts		
		Screw	Torx Key	Screw Torque Value
				N·m
D16 - D25	AXMT 1235..**	SSV M3x6-9507	STK-T08-9908	1,9
D25 - D40	AXMT 1705..**	SSV M4x9x5-9528	STK-T15-9910	3,9

**Body corners should be modified for R2 and more radius inserts / R2 ve üstü radyüslü uçlarda takımın modifiye edilmesi gerekmektedir.
*Suitable Insert brand is SMTM

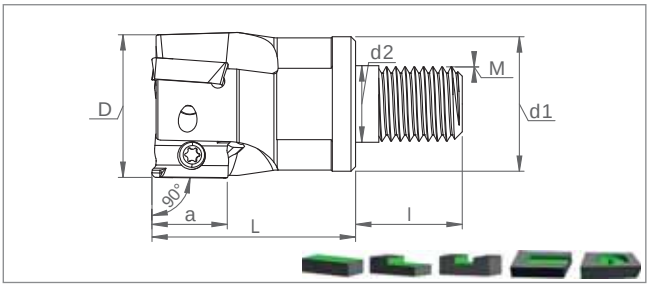

Ordering Code	Item Designation	Dimensions (mm)									Master Insert*
	MT90 AXMT 1235.. / 1705..		*D*	*Z*	*d1*	*d2*	*L*	*l*	*M*	*a*	
SM23994	MT90 AX12 D16 M08 L25 Z02-H	✓	16	2	15	8.5	25	17	8	10	AXMT 1235..
SM24007	MT90 AX12 D20 M10 L30 Z03-H	✓	20	3	18	10.5	30	19	10	10	
SM62412	MT90 AX12 D25 M12 L35 Z03-H	✓	25	3	21	12.5	35	23	12	10	
SM24014	MT90 AX12 D25 M12 L35 Z04-H	✓	25	4	21	12.5	35	23	12	10	
SM56466	MT90 AX17 D32 M16 L43 Z03-H	✓	32	3	29	17	43	23	16	14	AXMT 1705..
SM56473	MT90 AX17 D40 M16 L43 Z04-H	✓	40	4	29	17	43	23	16	14	

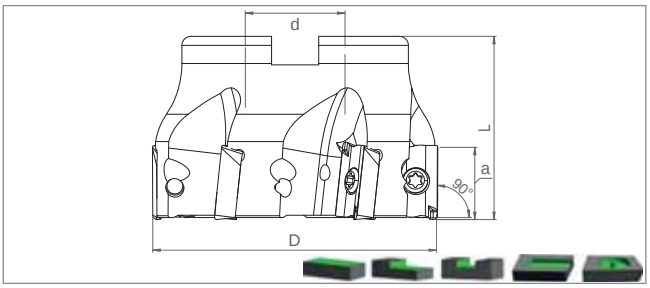

Ordering Code	Item Designation	Dimensions (mm)						Master Insert*
	TK90 AXMT 1235.. / 1705..		*D*	*Z*	*d*	*L*	*a*	
SM28395	TK90 AX12 D40 A16 Z05-H	✓	40	5	16	40	10	AXMT 1235..
SM28388	TK90 AX12 D50 A22 Z06-H	✓	50	6	22	40	10	
SM28371	TK90 AX12 D63 A22 Z07-H	✓	63	7	22	40	10	
SM28364	TK90 AX12 D80 A27 Z09-H	✓	80	9	27	50	10	
SM28357	TK90 AX17 D40 A16 Z04-H	✓	40	4	16	40	14	AXMT 1705..
SM28340	TK90 AX17 D50 A22 Z05-H	✓	50	5	22	40	14	
SM28333	TK90 AX17 D63 A22 Z06-H	✓	63	6	22	40	14	
SM24373	TK90 AX17 D80 A27 Z07-H	✓	80	7	27	50	14	
SM24380	TK90 AX17 D100 A32 Z08-H	✓	100	8	32	50	14	

Cooling mounting screw is optional / See Page "526" for cooling mounting screws.
İçten su vermeli montaj vidaları opsiyoneldir. / Bkz. Sayfa "526" İçten su vermeli montaj vidaları için.

Size Designation	Master Insert*	Spare Parts		
		Screw	Torx Key	Screw Torque Value
				N·m
D16 - D80	AXMT 1235..**	SSV M3x6-9507	STK-T08-9908	1,9
D32 - D100	AXMT 1705..**	SSV M4x9x5-9528	STK-T15-9910	3,9

**Body corners should be modified for R2 and more radius inserts / R2 ve üstü radyüslü uçlarda takımın modifiye edilmesi gerekmektedir.
*Suitable Insert brand is SMTM

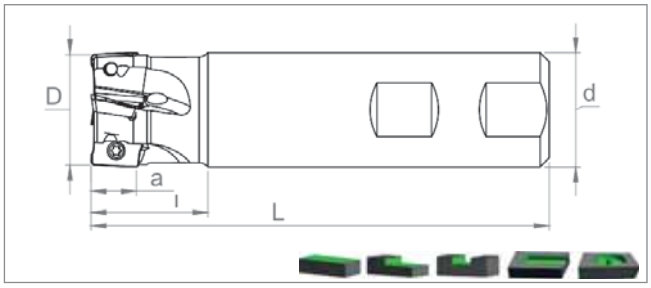

Ordering Code	Item Designation	Dimensions (mm)							Master Insert*
	ST90 ADMX 0702.. / 11T3.. / 1606..		*D*	*d*	*Z*	*L*	*l*	*a*	
SM44197	ST90 ADMX07 D10 C10 L120 Z02-H	✓	10	10	2	120	30	7	ADMX 0702..
SM44203	ST90 ADMX07 D12 C12 L120 Z03-H	✓	12	12	3	120	30	7	
SM63877	**ST90 ADMX07 D13 C12 L120 Z03-H**	✓	**13**	**12**	**3**	**120**	**30**	**7**	
SM43770	ST90 ADMX11 D20 W20 L150 Z02-H	✓	20	20	2	150	40	10.5	ADMX 11T3..
SM43787	ST90 ADMX11 D25 W25 L150 Z03-H	✓	25	25	3	150	40	10.5	
SM43794	ST90 ADMX11 D32 W32 L150 Z04-H	✓	32	32	4	150	40	10.5	
SM43800	ST90 ADMX16 D25 W25 L150 Z02-H	✓	25	25	2	150	40	16	ADMX 1606..
SM43817	ST90 ADMX16 D32 W32 L150 Z03-H	✓	32	32	3	150	40	16	

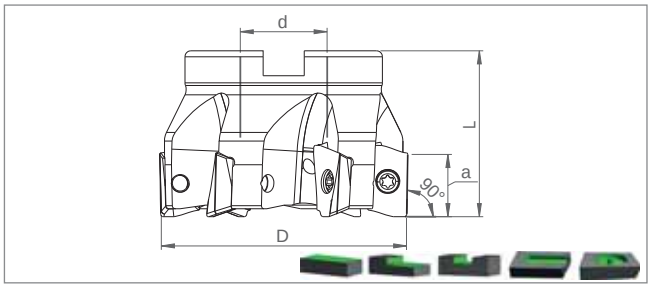

Ordering Code	Item Designation	Dimensions (mm)						Master Insert*
	TK90 ADMX 11T3.. / 1606..		*D*	*Z*	*d*	*L*	*a*	
SM43527	TK90 ADMX11 D40 A16 Z05-H	✓	40	5	16	40	10.5	ADMX 11T3..
SM43534	TK90 ADMX11 D50 A22 Z06-H	✓	50	6	22	40	10.5	
SM43541	TK90 ADMX11 D63 A22 Z07-H	✓	63	7	22	40	10.5	
SM42902	TK90 ADMX16 D50 A22 Z05-H	✓	50	5	22	40	16	ADMX 1606..
SM42919	TK90 ADMX16 D63 A22 Z06-H	✓	63	6	22	40	16	
SM42926	TK90 ADMX16 D80 A27 Z07-H	✓	80	7	27	50	16	

Cooling mounting screw is optional / See Page “526” for cooling mounting screws.
İçten su vermeli montaj vidaları opsiyoneldir. / Bkz. Sayfa “526” İçten su vermeli montaj vidaları için.

Size Designation	Master Insert*	Spare Parts		
		Screw	Torx Key	Screw Torque Value
D10 - D12	ADMX 0702..	SSV M2x5-9502	STK-T06-9906	0,4
D20	ADMX 11T3..	SSV M2.5x6-9505	STK-T08-9908	1,0
D25 - D63		SSV M2.5x7 -9506		
D25 - D80	ADMX 1606..	SSV M4x10-9514	STK-T15-9910	3,9

*Suitable Insert brand is PRMT

SMOXH CUTTING TOOLS
Kalitenin Yükselen Gücü

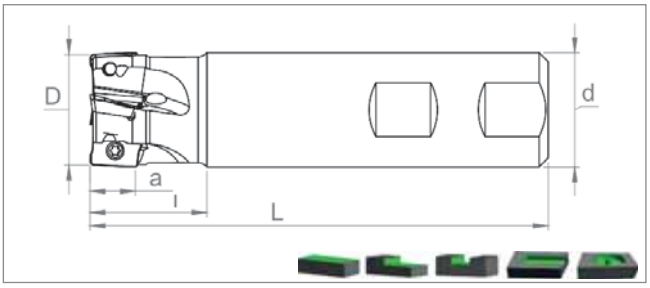

Ordering Code	Item Designation	Dimensions (mm)							Master Insert*
	ST90 APMT 1135..		*D*	*d*	*Z*	*L*	*l*	*a*	
SM01422	ST90 AP1135A D16 W16 L150 Z02-H	✓	16	16	2	150	40	11	APMT 1135..
SM01477	ST90 AP1135A D17 W16 L150 Z02-H	✓	17	16	2	150	30	11	
SM01446	ST90 AP1135A D20 W20 L150 Z03-H	✓	20	20	3	150	40	11	
SM60777	ST90 AP1135A D21 W20 L150 Z03-H	✓	21	20	3	150	30	11	
SM60784	ST90 AP1135A D26 C25 L200 Z03	✓	26	25	3	200	30	11	
SM65093	ST90 AP1135A D33 C32 L200 Z04	✓	33	32	4	200	30	11	

Size Designation	Master Insert*	Spare Parts		
		Screw	Torx Key	Screw Torque Value
				N·m
D16 - D80	APMT 1135..*	SSV M2.5x6-9505	STK-T08-9908	1,0

*Suitable Insert brand is ACHTK

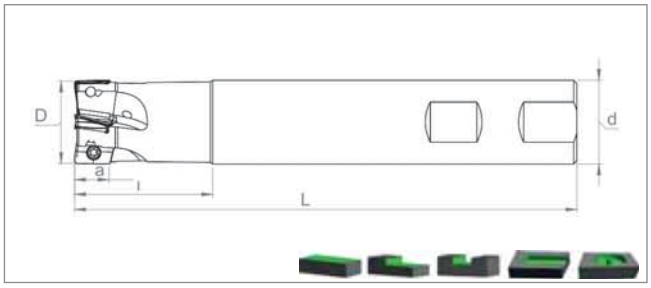

Ordering Code	Item Designation	Dimensions (mm)							Master Insert*
	ST90 ADKT 1505..		*D*	*d*	*Z*	*L*	*l*	*a*	
SM12110	ST90 AD1505 D25 W25 L120 Z02	-	25	25	2	120	30	14.3	ADKT 1505..
SM12134	ST90 AD1505 D25 W25 L150 Z02	-	25	25	2	150	40	14.3	
SM26704	ST90 AD1505 D30 W25 L150 Z03	-	30	25	3	150	30	14.3	
SM12127	ST90 AD1505 D32 W32 L120 Z03	-	32	32	3	120	30	14.3	
SM12141	ST90 AD1505 D32 W32 L150 Z03	-	32	32	3	150	40	14.3	

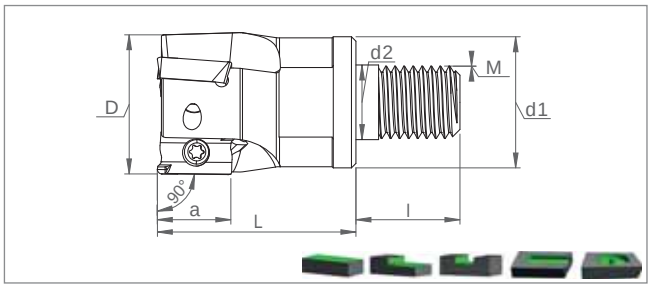

Ordering Code	Item Designation	Dimensions (mm)									Master Insert*
	MT90 ADKT 1505..		*D*	*Z*	*d1*	*d2*	*L*	*l*	*M*	*a*	
SM56442	MT90 AD1505 D25 M12 L35 Z02-H	✓	25	2	21	12.5	35	23	12	14.3	ADKT 1505..
SM56459	MT90 AD1505 D32 M16 L43 Z03-H	✓	32	3	29	17	43	23	16	14.3	

Size Designation	Master Insert*	Spare Parts		
		Screw	Torx Key	Screw Torque Value
D25 - D32	ADKT 1505..	SSV M4x10-9514	STK-T15-9910	3,9 N·m

**Body corners should be modified for R2 and more radius inserts / R2 ve üstü radyüslü uçlarda takımın modifiye edilmesi gerekmektedir.

*Suitable Insert brand is ISC

SMOXH® CUTTING TOOLS
Kalitenin Yükselen Gücü

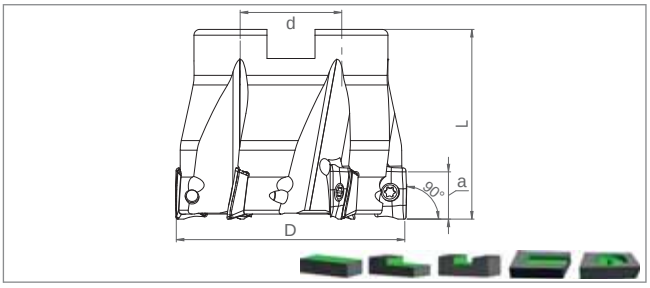

Ordering Code	Item Designation	Dimensions (mm)						Master Insert*
	TK90 ADKT 1505..		*D*	*Z*	*d*	*L*	*a*	
SM29200	TK90 AD1505 D40 A16 Z04-H	✓	40	4	16	40	14.3	ADKT 1505..
SM29194	TK90 AD1505 D50 A22 Z05-H	✓	50	5	22	40	14.3	
SM29187	TK90 AD1505 D63 A22 Z06-H	✓	63	6	22	40	14.3	
SM29170	TK90 AD1505 D80 A27 Z07-H	✓	80	7	27	50	14.3	
SM29163	TK90 AD1505 D100 A32 Z08-H	✓	100	8	32	50	14.3	
SM13933	TK90 AD1505 D125 B40 Z09	-	125	9	40	63	14.3	

Cooling mounting screw is optional / See Page “526” for cooling mounting screws.
İçten su vermeli montaj vidaları opsiyoneldir. / Bkz. Sayfa “526” İçten su vermeli montaj vidaları için.

Size Designation	Master Insert*	Spare Parts		
		Screw	Torx Key	Screw Torque Value
				N·m
D40 - D125	ADKT 1505..	SSV M4x10-9514	STK-T15-9910	3,9

**Body corners should be modified for R2 and more radius inserts / R2 ve üstü radyüslü uçlarda takımın modifiye edilmesi gerekmektedir. ■
*Suitable Insert brand is ISC

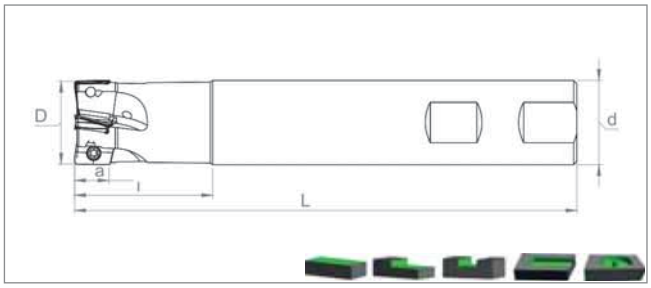

Ordering Code	Item Designation	Dimensions (mm)						Master Insert*	Master Insert*
	ST90 AD.T 0803.. / 10T3.. / 1204..		*D*	*d*	*Z*	*L*	*l*	*a*	
SM35300	ST90 AD08 D16 W16 L150 Z02-H	✓	16	16	2	150	40	8	ADMT 0803..
SM35331	ST90 AD08 D16 C16 L200 Z02	-	16	16	2	200	50	8	
SM35317	ST90 AD08 D20 W20 L150 Z03-H	✓	20	20	3	150	40	8	
SM35348	ST90 AD08 D20 C20 L200 Z03	-	20	20	3	200	50	8	
SM35324	ST90 AD08 D25 W25 L150 Z04-H	✓	25	25	4	150	40	8	
SM35355	ST90 AD10 D16 W16 L150 Z02-H	✓	16	16	2	150	40	10	ADMT 10T3..
SM35362	ST90 AD10 D20 W20 L150 Z03-H	✓	20	20	3	150	40	10	
SM35379	ST90 AD10 D25 W25 L150 Z04-H	✓	25	25	4	150	40	10	
SM35386	ST90 AD12 D20 W20 L150 Z02	-	20	20	2	150	40	11.7	ADKT 1204..
SM35393	ST90 AD12 D25 W25 L150 Z03	-	25	25	3	150	40	11.7	
SM35409	ST90 AD12 D30 W25 L150 Z04	-	30	25	4	150	30	11.7	
SM35416	ST90 AD12 D32 W32 L150 Z04	-	32	32	4	150	40	11.7	

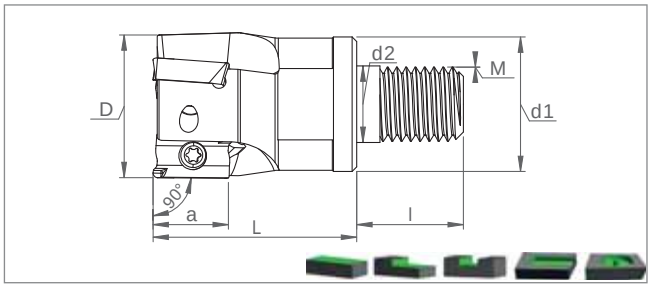

Ordering Code	Item Designation	Dimensions (mm)									Master Insert*
	MT90 AD.T 0803.. / 10T3.. / 1204..		*D*	*Z*	*d1*	*d2*	*L*	*l*	*M*	*a*	
SM56350	MT90 AD08 D16 M08 L25 Z02-H	✓	16	2	15	8.5	25	17	8	8	ADMT 0803..
SM56367	MT90 AD08 D20 M10 L30 Z03-H	✓	20	3	18	10.5	30	19	10	8	
SM56374	MT90 AD08 D25 M12 L35 Z04-H	✓	25	4	21	12.5	35	23	12	8	
SM56381	MT90 AD10T3 D16 M08 L25 Z02-H	✓	16	2	15	8.5	25	17	8	10	ADMT 10T3..
SM56398	MT90 AD10T3 D20 M10 L30 Z03-H	✓	20	3	18	10.5	30	19	10	10	
SM56404	MT90 AD10T3 D25 M12 L35 Z04-H	✓	25	4	21	12.5	35	23	12	10	
SM56411	MT90 AD12 D20 M10 L30 Z02-H	✓	20	2	18	10.5	30	19	10	11.7	ADKT 1204..
SM56428	MT90 AD12 D25 M12 L35 Z03-H	✓	25	3	21	12.5	35	23	12	11.7	
SM56435	MT90 AD12 D32 M16 L43 Z04-H	✓	32	4	29	17	43	23	16	11.7	

**Body corners should be modified for R2 and more radius inserts / R2 ve üstü radyüslü uçlarda takımın modifiye edilmesi gerekmektedir.

*Suitable Insert brand is WLTR

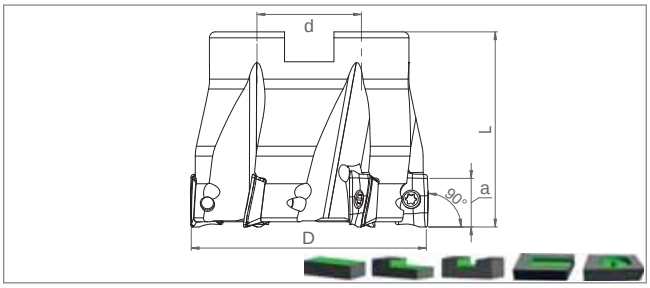

Ordering Code	Item Designation		Dimensions (mm)					Master Insert*
	TK90 AD.T 10T3.. / 1204.. / 1606..		*D*	*Z*	*d*	*L*	*a*	
SM31340	TK90 AD10T3 D40 A16 Z05-H		40	5	16	40	10	ADMT 10T3..
SM31234	TK90 AD10T3 D50 A22 Z06-H		50	6	22	40	10	
SM31258	TK90 AD10T3 D63 A22 Z07-H		63	7	22	40	10	
SM54271	TK90 AD12 D40 A16 Z05-H	NEW	40	5	16	40	11.7	ADKT 1204..
SM54288	TK90 AD12 D50 A22 Z06-H	NEW	50	6	22	40	11.7	
SM54295	TK90 AD12 D63 A22 Z07-H	NEW	63	7	22	40	11.7	
SM54301	TK90 AD12 D80 A27 Z08-H	NEW	80	8	27	50	11.7	
SM31296	TK90 AD1606 D50 A22 Z05-H		50	5	22	40	15	ADMT 1606..
SM31319	TK90 AD1606 D63 A22 Z06-H		63	6	22	40	15	
SM31333	TK90 AD1606 D80 A27 Z07-H		80	7	27	50	15	

Cooling mounting screw is optional / See Page “526” for cooling mounting screws.
İçten su vermeli montaj vidaları opsiyoneldir. / Bkz. Sayfa “526” İçten su vermeli montaj vidaları için.

Size Designation	Master Insert*	Spare Parts		
		Screw	Torx Key	Screw Torque Value N·m
D16 - D20	ADMT 0803..**	SSV M2.5x5-9504	STK-T08-9908	1,0
D25		SSV M2.5x6 -9505		
D16 - D25	ADMT 10T3..**	SSV M2.5x6-9505		
D40 - D63		SSV M2.5x7-9506		
D20 - D25	ADKT 1204..**	SSV M3x6-9507		1,9
D30 - D63		SSV M3x8-9508		
D50 - D80	ADMT 1606..**	SSV M3.5x10-9511	STK-T15-9910	2,7

**Body corners should be modified for R2 and more radius inserts / R2 ve üstü radyüslü uçlarda takımın modifiye edilmesi gerekmektedir.
*Suitable Insert brand is WLTR

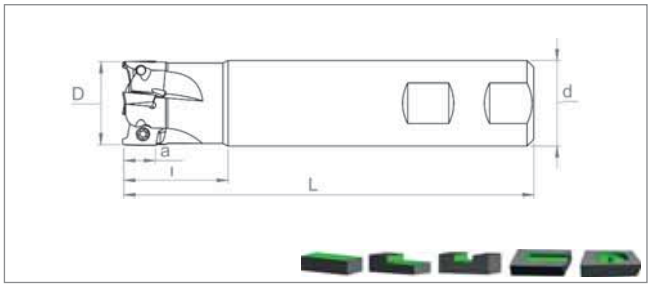

Ordering Code	Item Designation	Dimensions (mm)							Master Insert*
	ST90 RT 0702.. / 1003.. / 1606..		*D*	*d*	*Z*	*L*	*l*	*a*	
SM13452	ST90 RT07 D10 C10 L120 Z02	-	10	10	2	120	30	7	RT 0702..
SM13445	ST90 RT07 D12 C12 L120 Z02	-	12	12	2	120	30	7	
SM13469	ST90 RT07 D12 W12 L120 Z02	-	12	12	2	120	30	7	
SM13476	ST90 RT07 D14 W12 L120 Z02	-	14	12	2	120	30	7	
SM13490	ST90 RT10 D16 W16 L120 Z02	-	16	16	2	120	30	10	RT 1003..
SM13537	ST90 RT10 D16 W16 L150 Z02	-	16	16	2	150	40	10	
SM13599	ST90 RT10 D16 C16 L200 Z02	-	16	16	2	200	50	10	
SM13544	ST90 RT10 D17 W16 L150 Z02	-	17	16	2	150	30	10	
SM13506	ST90 RT10 D18 W16 L120 Z02	-	18	16	2	120	30	10	
SM13513	ST90 RT10 D20 W20 L120 Z03	-	20	20	3	120	30	10	
SM13551	ST90 RT10 D20 W20 L150 Z03	-	20	20	3	150	40	10	
SM13483	ST90 RT10 D20 C20 L200 Z03	-	20	20	3	200	50	10	
SM13568	ST90 RT10 D22 W20 L120 Z03	-	22	20	3	120	30	10	
SM13575	ST90 RT10 D22 W20 L150 Z03	-	22	20	3	150	30	10	
SM13612	ST90 RT10 D22 C20 L200 Z03	-	22	20	3	200	30	10	
SM13520	ST90 RT10 D25 W25 L120 Z04	-	25	25	4	120	30	10	
SM26896	ST90 RT10 D25 W25 L150 Z04	-	25	25	4	150	40	10	
SM13636	ST90 RT10 D25 C25 L200 Z04	-	25	25	4	200	50	10	
SM13582	ST90 RT10 D32 W32 L120 Z05	-	32	32	5	120	30	10	
SM13629	ST90 RT10 D32 W32 L150 Z05	-	32	32	5	150	40	10	
SM13643	ST90 RT10 D32 C32 L200 Z05	-	32	32	5	200	50	10	
SM13650	ST90 RT16 D25 W25 L120 Z02	-	25	25	2	120	30	16	RT 1606..
SM13674	ST90 RT16 D25 W25 L150 Z02	-	25	25	2	150	40	16	
SM13698	ST90 RT16 D25 C25 L200 Z02	-	25	25	2	200	50	16	
SM13667	ST90 RT16 D32 W32 L120 Z03	-	32	32	3	120	30	16	
SM13681	ST90 RT16 D32 W32 L150 Z03	-	32	32	3	150	40	16	
SM13735	ST90 RT16 D32 C32 L200 Z03	-	32	32	3	200	40	16	
SM13711	ST90 RT16 D32 C32 L250 Z03	-	32	32	3	250	180	16	
SM13704	ST90 RT16 D40 W32 L120 Z04	-	40	32	4	120	30	16	
SM13728	ST90 RT16 D40 W32 L150 Z04	-	40	32	4	150	40	16	
SM13742	ST90 RT16 D40 C32 L200 Z04	-	40	32	4	200	30	16	

Size Designation	Master Insert*	Spare Parts		
		Screw	Torx Key	Screw Torque Value N·m
D10 - D14	RT 0703..	SSV M2x4-9521	STK-T06-9906	0,4
D16 - D18	RT 1003..	SSV M2.5x5-9504	STK-T08-9908	1,0
D20 - D32		SSV M2.5x6-9505		
D25 - D40	RT 1606..	SSV M4x10-9514	STK-T15-9910	3,9

*Suitable Insert brand is SAFETY

SMOXH CUTTING TOOLS
Kalitenin Yükselen Gücü

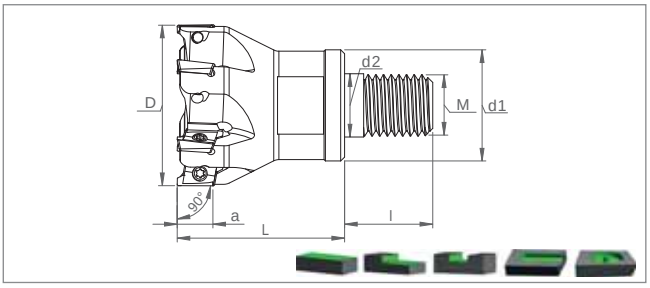

Ordering Code	Item Designation	Dimensions (mm)									Master Insert*
	MT90 RT 1003..		*D*	*Z*	*d1*	*d2*	*L*	*l*	*M*	*a*	
SM24069	MT90 RT10 D25 M12 L35 Z04-H	✓	25	4	21	12.5	35	23	12	10	RT 1003..
SM24076	MT90 RT10 D32 M16 L43 Z05-H	✓	32	5	29	17	43	23	16	10	
SM24083	MT90 RT10 D42 M16 L43 Z06-H	✓	42	6	29	17	43	23	16	10	

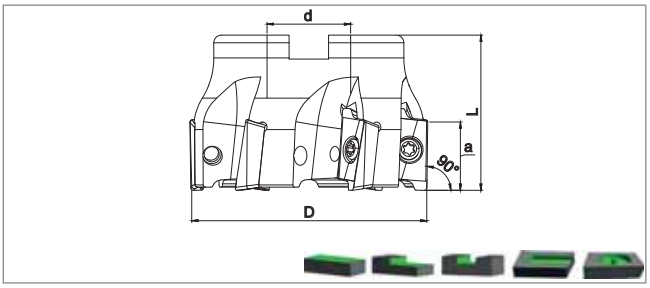

Ordering Code	Item Designation	Dimensions (mm)						Master Insert*
	TK90 RT 1003.. / 1606..		*D*	*Z*	*d*	*L*	*a*	
SM28258	TK90 RT10 D40 A16 Z06-H	✓	40	6	16	40	10	RT 1003..
SM28241	TK90 RT10 D50 A22 Z07-H	✓	50	7	22	40	10	
SM28234	TK90 RT10 D63 A22 Z09-H	✓	63	9	22	40	10	
SM28227	TK90 RT16 D50 A22 Z05-H	✓	50	5	22	40	16	RT 1606..
SM28210	TK90 RT16 D63 A22 Z06-H	✓	63	6	22	40	16	
SM24311	TK90 RT16 D80 A27 Z07-H	✓	80	7	27	50	16	
SM24328	TK90 RT16 D100 A32 Z08-H	✓	100	8	32	50	16	

Cooling mounting screw is optional / See Page “526” for cooling mounting screws.
İçten su vermeli montaj vidaları opsiyoneldir. / Bkz. Sayfa “526” İçten su vermeli montaj vidaları için.

Size Designation	Master Insert*	Spare Parts		
		Screw	Torx Key	Screw Torque Value
				N·m
D25 - D32	RT 1003..	SSV M2.5x6-9505	STK-T08-9908	1,0
D40 - D63		SSV M2.5x7-9506		
D50 - D100	RT 1606..	SSV M4x10-9514	STK-T15-9910	3,9

*Suitable Insert brand is SAFETY

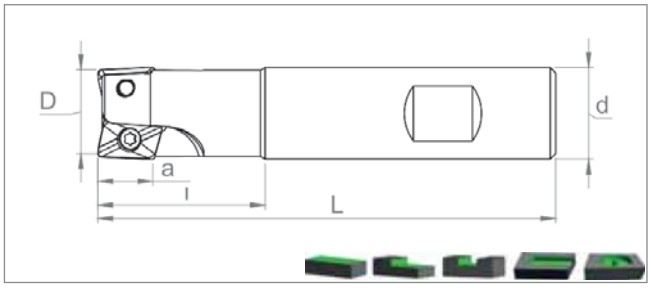

Ordering Code	Item Designation	Dimensions (mm)							Master Insert*
	ST90 XOMX 0602.. / 10T3.. / 1204..		*D*	*d*	*Z*	*L*	*l*	*a*	
SM35485	ST90 XO06 D10 C10 L120 Z02	-	10	10	2	120	30	5.5	XOMX 0602..
SM35492	ST90 XO06 D12 C12 L120 Z03	-	12	12	3	120	30	5.5	
SM49734	ST90 XO06 D16 W16 L120 Z03-H	✓	16	16	3	120	30	5.5	
SM43176	ST90 XO06 D20 W20 L120 Z04-H	✓	20	20	4	120	30	5.5	
SM37892	ST90 XO10 D16 W16 L120 Z02	-	16	16	2	120	30	9	XOMX 10T3..
SM35508	ST90 XO10 D16 W16 L120 Z02-H	✓	16	16	2	120	30	9	
SM35522	ST90 XO10 D16 W16 L150 Z02-H	✓	16	16	2	150	40	9	
SM37908	ST90 XO10 D20 W20 L120 Z03	-	20	20	3	120	30	9	
SM35515	ST90 XO10 D20 W20 L120 Z03-H	✓	20	20	3	120	30	9	
SM35539	ST90 XO10 D20 W20 L150 Z03-H	✓	20	20	3	150	40	9	
SM35546	ST90 XO10 D20 C20 L200 Z03	-	20	20	3	200	50	9	
SM35553	ST90 XO12 D20 W20 L120 Z02-H	✓	20	20	2	120	30	11	XOMX 1204..
SM35560	ST90 XO12 D20 W20 L150 Z02-H	✓	20	20	2	150	40	11	
SM35584	ST90 XO12 D20 C20 L200 Z02	-	20	20	2	200	50	11	
SM35577	ST90 XO12 D25 W25 L150 Z03-H	✓	25	25	3	150	40	11	
SM35591	ST90 XO12 D25 C25 L200 Z03	-	25	25	3	200	50	11	
SM26483	ST90 XO12 D32 W32 L150 Z04-H	✓	32	32	4	150	40	11	
SM35607	ST90 XO12 D32 C32 L200 Z04	-	32	32	4	200	50	11	

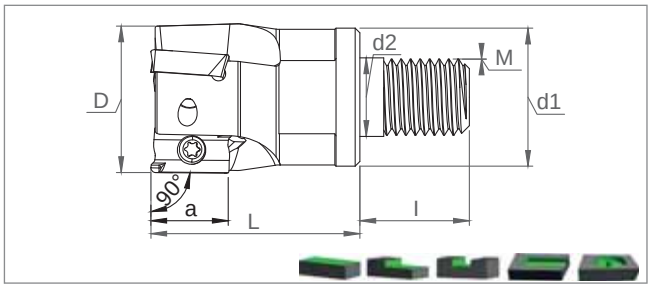

Ordering Code	Item Designation	Dimensions (mm)									Master Insert*
	MT90 XOMX 10T3.. / 1204.. SCO		*D*	*Z*	*d1*	*d2*	*L*	*l*	*M*	*a*	
SM36581	MT90 XO10 D16 M08 L25 Z02-H	✓	16	2	15	8.5	25	17	8	9	XOMX 10T3..
SM36598	MT90 XO10 D20 M10 L30 Z03-H	✓	20	3	18	10.5	30	19	10	9	
SM36604	MT90 XO12 D20 M10 L30 Z02-H	✓	20	2	18	10.5	30	19	10	11	XOMX 1204..
SM36611	MT90 XO12 D25 M12 L35 Z03-H	✓	25	3	21	12.5	35	23	12	11	
SM36628	MT90 XO12 D32 M16 L43 Z04-H	✓	32	4	29	17	43	23	16	11	

**Body corners should be modified for R2 and more radius inserts / R2 ve üstü radyüslü uçlarda takımın modifiye edilmesi gerekmektedir.

*Suitable Insert brand is SCO

SMOXH® CUTTING TOOLS
Kalitenin Yükselen Gücü

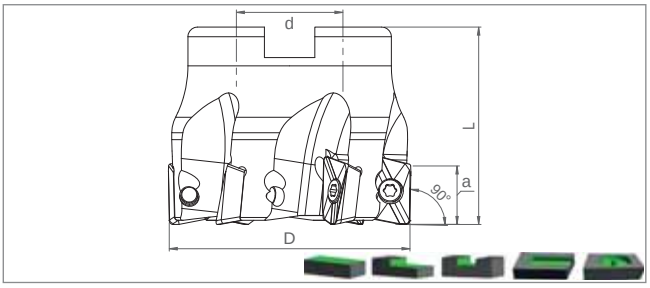

Ordering Code	Item Designation	Dimensions (mm)						Master Insert*
	TK90 XOMX 10T3.. / 1204.. / 1806..		*D*	*Z*	*d*	*L*	*a*	
SM53847	TK90 XO10 D40 A16 Z05-H	✓	40	5	16	40	9	XOMX 10T3..
SM53854	TK90 XO10 D40 A16 Z06-H	✓	40	6	16	40	9	
SM53861	TK90 XO10 D50 A22 Z06-H	✓	50	6	22	40	9	
SM53878	TK90 XO10 D50 A22 Z07-H	✓	50	7	22	40	9	
SM53885	TK90 XO10 D63 A22 Z07-H	✓	63	7	22	40	9	
SM53892	TK90 XO10 D63 A22 Z08-H	✓	63	8	22	40	9	
SM53908	TK90 XO12 D40 A16 Z04-H	✓	40	4	16	40	11	XOMX 1204..
SM28944	TK90 XO12 D40 A16 Z05-H	✓	40	5	16	40	11	
SM53915	TK90 XO12 D50 A22 Z05-H	✓	50	5	22	40	11	
SM27237	TK90 XO12 D50 A22 Z06-H	✓	50	6	22	40	11	
SM53922	TK90 XO12 D63 A22 Z07-H	✓	63	7	22	40	11	
SM28937	TK90 XO12 D63 A22 Z08-H	✓	63	8	22	40	11	
SM53939	TK90 XO12 D80 A27 Z08-H	✓	80	8	27	50	11	
SM28920	TK90 XO12 D80 A27 Z09-H	✓	80	9	27	50	11	
SM38196	TK90 XO12 D100 A32 Z11-H	✓	100	11	32	50	11	
SM38202	TK90 XO12 D125 B40 Z12	-	125	12	40	63	11	
SM31012	TK90 XO18 D50 A22 Z04-H	✓	50	4	22	40	17	XOMX 1806..
SM31029	TK90 XO18 D63 A22 Z05-H	✓	63	5	22	40	17	
SM31036	TK90 XO18 D80 A27 Z07-H	✓	80	7	27	50	17	
SM31043	TK90 XO18 D100 A32 Z08-H	✓	100	8	32	50	17	
SM31050	TK90 XO18 D125 B40 Z10	-	125	10	40	63	17	

Cooling mounting screw is optional / See Page "526" for cooling mounting screws.
İçten su vermeli montaj vidaları opsiyoneldir. / Bkz. Sayfa "526" İçten su vermeli montaj vidaları için.

Size Designation	Master Insert*	Spare Parts		
		Screw	Torx Key	Screw Torque Value N·m
D10 - D20	XOMX 0602..**	SSV M1.8X4-9501	STK-T06-9906	0,4
D16	XOMX 10T3..**	SSV M2.5x5-9504	STK-T08-9908	1,0
D20 - D63		SSV M2.5x7-9506		
D20 - D125	XOMX 1204..**	SSV M3.5x8 SC-9513	STK-T10-9909	2,7
D50 - D125	XOMX 1806..**	SSV M4.5x11-9518	STK-T20-9911	4,7

**Body corners should be modified for R2 and more radius inserts / R2 ve üstü radyüslü uçlarda takımın modifiye edilmesi gerekmektedir.
*Suitable Insert brand is SCO

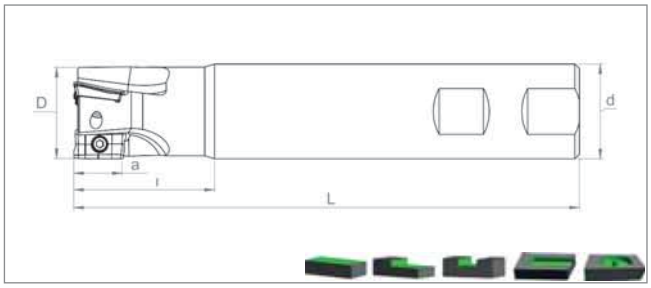

Ordering Code	Item Designation	Dimensions (mm)							Master Insert*
	ST90 EDPT 10T3.. / 1404..		*D*	*d*	*Z*	*L*	*l*	*a*	
SM43220	ST90 ED10 D16 W16 L150 Z02-H	✓	16	16	2	150	40	9.8	EDPT 10T3..
SM43237	ST90 ED10 D20 W20 L150 Z03-H	✓	20	20	3	150	40	9.8	
SM43244	ST90 ED10 D25 W25 L150 Z04-H	✓	25	25	4	150	40	9.8	
SM49680	ST90 ED10 D32 W32 L150 Z05-H	✓	32	32	5	150	40	9.8	
SM43268	ST90 ED14 D20 W20 L150 Z02-H	✓	20	20	2	150	40	14	EDPT 1404..
SM43275	ST90 ED14 D25 W25 L150 Z03-H	✓	25	25	3	150	40	14	
SM43282	ST90 ED14 D32 W32 L150 Z04-H	✓	32	32	4	150	40	14	
SM43299	ST90 ED14 D40 W32 L150 Z05-H	✓	40	32	5	150	30	14	

Size Designation	Master Insert*	Spare Parts		
		Screw	Torx Key	Screw Torque Value
				N·m
D16 - D20	EDPT 10T3..**	SSV M2.5x6-9505	STK-T08-9908	1,0
D25 - D32		SSV M2.5x7-9506		
D20	EDPT 1404..**	SSV M3x6-9507		1,9
D25 - D40		SSV M3x8-9508		

**Body corners should be modified for R2 and more radius inserts / R2 ve üstü radyüslü uçlarda takımın modifiye edilmesi gerekmektedir.

*Suitable Insert brand is KNMTL

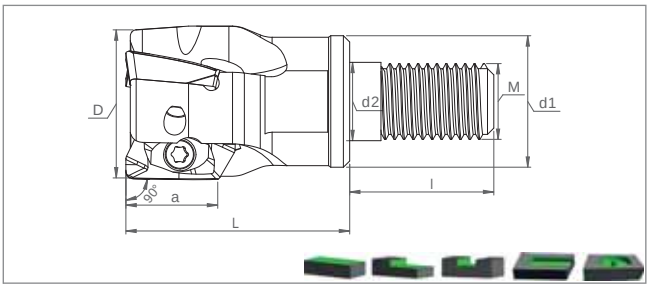

Ordering Code	Item Designation	Dimensions (mm)									Master Insert*
	MT90 EDPT 10T3.. / 1404..		*D*	*Z*	*d1*	*d2*	*L*	*l*	*M*	*a*	
SM43848	MT90 ED10 D16 M08 L25 Z02-H	✓	16	2	15	8.5	25	17	8	10	EDPT 10T3..
SM43855	MT90 ED10 D20 M10 L30 Z03-H	✓	20	3	18	10.5	30	19	10	10	
SM43862	MT90 ED10 D25 M12 L35 Z04-H	✓	25	4	21	12.5	35	23	12	10	
SM56558	MT90 ED10 D32 M16 L43 Z05-H	✓	32	5	29	17	43	23	16	10	
SM43879	MT90 ED14 D20 M10 L30 Z02-H	✓	20	2	18	10.5	30	19	10	14	EDPT 1404..
SM43886	MT90 ED14 D25 M12 L35 Z03-H	✓	25	3	21	12.5	35	23	12	14	
SM43893	MT90 ED14 D32 M16 L43 Z04-H	✓	32	4	29	17	43	23	16	14	

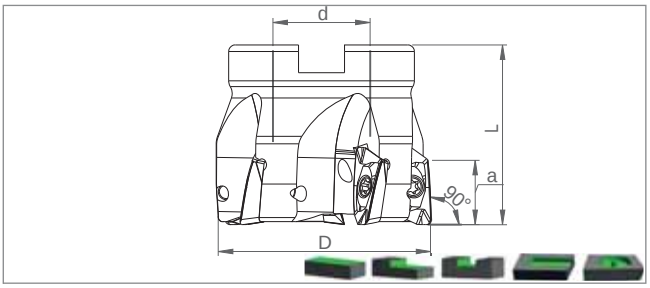

Ordering Code	Item Designation	Dimensions (mm)						Master Insert*
	TK90 EDPT 10T3.. / 1404..		*D*	*Z*	*d*	*L*	*a*	
SM42995	TK90 ED10 D40 A16 Z05-H	✓	40	5	16	40	9.87	EDPT 10T3..
SM43008	TK90 ED10 D50 A22 Z06-H	✓	50	6	22	40	9.87	
SM43015	TK90 ED10 D63 A22 Z07-H	✓	63	7	22	40	9.87	
SM43022	TK90 ED14 D40 A16 Z04-H	✓	40	4	16	40	13.8	EDPT 1404..
SM43039	TK90 ED14 D50 A22 Z05-H	✓	50	5	22	40	13.8	
SM43046	TK90 ED14 D63 A22 Z06-H	✓	63	6	22	40	13.8	
SM43053	TK90 ED14 D80 A27 Z07-H	✓	80	7	27	50	13.8	

Cooling mounting screw is optional / See Page "526" for cooling mounting screws.
İçten su vermeli montaj vidaları opsiyoneldir. / Bkz. Sayfa "526" İçten su vermeli montaj vidaları için.

Size Designation	Master Insert*	Spare Parts		
		Screw	Torx Key	Screw Torque Value
				N·m
D16 - D20	EDPT 10T3..**	SSV M2.5x6-9505	STK-T08-9908	1,0
D25 - D32		SSV M2.5x7-9506		
D20	EDPT 1404..**	SSV M3x6-9507		1,9
D25 - D80		SSV M3x8-9508		

**Body corners should be modified for R2 and more radius inserts / R2 ve üstü radyüslü uçlarda takımın modifiye edilmesi gerekmektedir. ■
*Suitable Insert brand is KNMTL

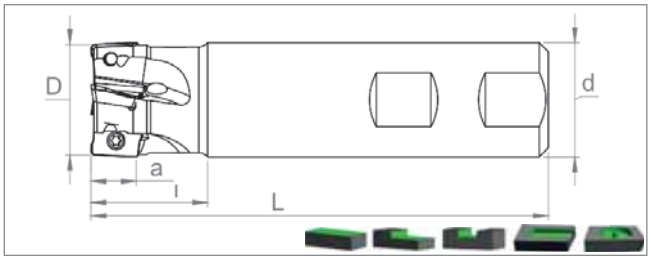

Ordering Code	Item Designation	Dimensions (mm)							Master Insert*
	ST90 AOMT 1236..		*D*	*d*	*Z*	*L*	*l*	*a*	
SM35614	ST90 AO12 D16 W16 L150 Z02-H	✓	16	16	2	150	40	10	AOMT 1236..
SM35621	ST90 AO12 D20 W20 L150 Z03-H	✓	20	20	3	150	40	10	
SM35638	ST90 AO12 D22 W20 L150 Z03-H	✓	22	20	3	150	30	10	
SM35645	ST90 AO12 D25 W25 L150 Z04-H	✓	25	25	4	150	40	10	
SM35652	ST90 AO12 D32 W32 L150 Z05-H	✓	32	32	5	150	40	10	

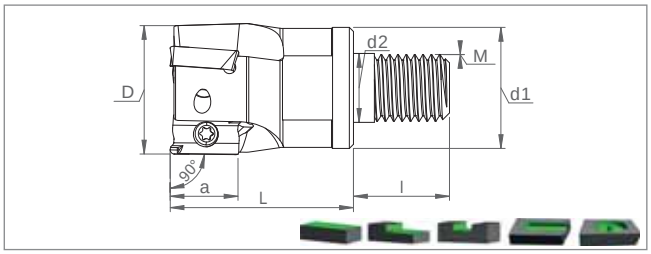

Ordering Code	Item Designation	Dimensions (mm)									Master Insert*
	MT90 AOMT 1236..		*D*	*Z*	*d1*	*d2*	*L*	*l*	*M*	*a*	
SM54981	MT90 AO12 D16 M08 L25 Z02-H	✓	16	2	15	8.5	25	17	8	10	AOMT 1236..
SM54998	MT90 AO12 D20 M10 L30 Z03-H	✓	20	3	18	10.5	30	19	10	10	
SM55001	MT90 AO12 D25 M12 L35 Z04-H	✓	25	4	21	12.5	35	23	12	10	
SM55018	MT90 AO12 D32 M16 L43 Z05-H	✓	32	5	29	17	43	23	16	10	

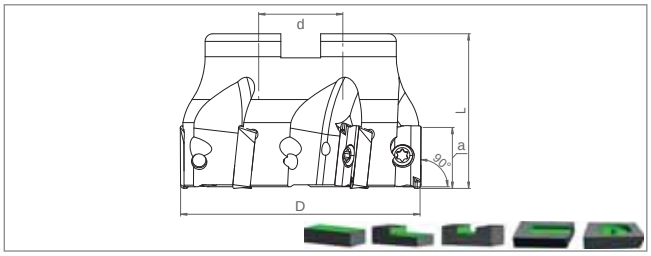

Ordering Code	Item Designation	Dimensions (mm)						Master Insert*
	TK90 AOMT 1236..		*D*	*Z*	*d*	*L*	*a*	
SM30961	TK90 AO12 D40 A16 Z05-H	✓	40	5	16	40	10	AOMT 1236..
SM30978	TK90 AO12 D50 A22 Z06-H	✓	50	6	22	40	10	
SM30985	TK90 AO12 D63 A22 Z07-H	✓	63	7	22	40	10	
SM30992	TK90 AO12 D80 A27 Z08-H	✓	80	8	27	50	10	
SM31005	TK90 AO12 D100 A32 Z10-H	✓	100	10	32	50	10	

Size Designation	Master Insert*	Spare Parts		
		Screw	Torx Key	Screw Torque Value
				N·m
D16 - D20	AOMT 1236..	SSV M2.5x5-9504	STK-T08-9908	1,0
D22 - D100		SSV M2.5x6-9505		

*Suitable Insert brand is MTSBH

SMOXH® CUTTING TOOLS
Kalitenin Yükselen Gücü

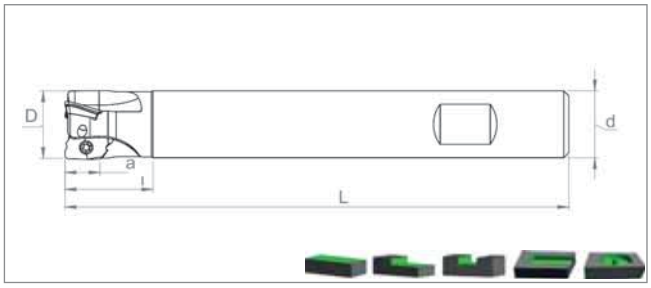

Ordering Code	Item Designation	Dimensions (mm)							Master Insert*
	ST90 XDKT 0703.. / 11T3..		*D*	*d*	*Z*	*L*	*l*	*a*	
SM29781	ST90 XD07 D12 C10 L120 Z02	-	12	10	2	120	30	7	XDKT 0703..
SM29774	ST90 XD07 D12 C12 L120 Z02	-	12	12	2	120	30	7	
SM37922	ST90 XD07 D16 W16 L150 Z03-H	✓	16	16	3	150	40	7	
SM29750	ST90 XD07 D16 C16 L200 Z03	-	16	16	3	200	50	7	
SM37915	ST90 XD07 D17 W16 L150 Z03-H	✓	17	16	3	150	30	7	
SM29743	ST90 XD11 D16 W16 L150 Z02-H	✓	16	16	2	150	40	11	XDKT 11T3..
SM29736	ST90 XD11 D16 C16 L200 Z02	-	16	16	2	200	50	11	
SM29712	ST90 XD11 D17 W16 L150 Z02-H	✓	17	16	2	150	30	11	
SM29729	ST90 XD11 D17 C16 L200 Z02	-	17	16	2	200	30	11	
SM29590	ST90 XD11 D20 W20 L150 Z03-H	✓	20	20	3	150	40	11	
SM29613	ST90 XD11 D20 C20 L200 Z03	-	20	20	3	200	50	11	
SM29583	ST90 XD11 D21 W20 L150 Z03-H	✓	21	20	3	150	30	11	
SM29606	ST90 XD11 D21 C20 L200 Z03	-	21	20	3	200	30	11	
SM29620	ST90 XD11 D25 W25 L150 Z03-H	✓	25	25	3	150	40	11	
SM29576	ST90 XD11 D25 C25 L200 Z03	-	25	25	3	200	50	11	
SM29705	ST90 XD11 D26 W25 L150 Z04-H	✓	26	25	4	150	30	11	
SM29699	ST90 XD11 D26 C25 L200 Z04	-	26	25	4	200	30	11	

Size Designation	Master Insert*	Spare Parts		
		Screw	Torx Key	Screw Torque Value
D12 - D16	XDKT 0703..	SSV M2.2x5-9503	STK-T06-9906	0,65
D16 - D17	XDKT 11T3..	SSV M2.5x5-9504	STK-T08-9908	1,0
D20 - D26		SSV M2.5x6-9505		

*Suitable Insert brand is CRTZ

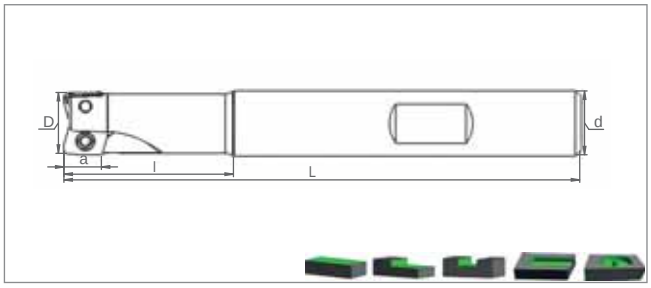

Ordering Code	Item Designation	Dimensions (mm)							Master Insert*
	ST90 AXMT 0602..		*D*	*d*	*Z*	*L*	*l*	*a*	
SM43138	ST90 AX06 D10 W10 L120 Z02-H	✓	10	10	2	120	30	5.75	AXMT 0602..
SM43145	ST90 AX06 D12 W12 L120 Z02-H	✓	12	12	2	120	30	5.75	
SM43152	ST90 AX06 D16 W16 L120 Z04-H	✓	16	16	4	120	30	5.75	

Size Designation	Master Insert*	Spare Parts		
		Screw	Torx Key	Screw Torque Value
D10 - D16	AXMT 0602..*	SSV M1.8x4-9501	STK-T06-9906	0,4 N·m

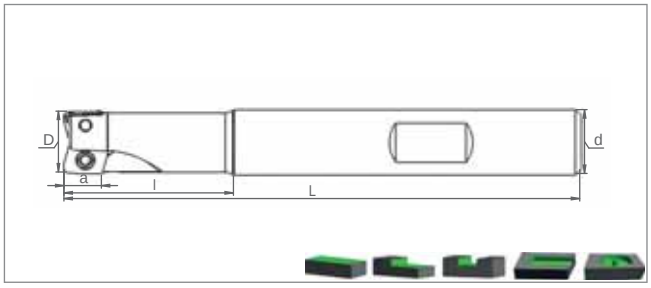

Ordering Code	Item Designation	Dimensions (mm)							Master Insert*
	ST90 APKT 0602..		*D*	*d*	*Z*	*L*	*l*	*a*	
SM43374	ST90 APKT06 D10 W10 L120 Z02-H	✓	10	10	2	120	30	5.5	APKT 0602..
SM43381	ST90 APKT06 D11 W10 L120 Z02-H	✓	11	10	2	120	30	5.5	
SM43398	ST90 APKT06 D12 W12 L120 Z03-H	✓	12	12	3	120	30	5.5	
SM43404	ST90 APKT06 D13 W12 L120 Z03-H	✓	13	12	3	120	30	5.5	

Size Designation	Master Insert**	Spare Parts		
		Screw	Torx Key	Screw Torque Value
D10 - D13	APKT 0602..	SSV M1.8x4-9501	STK-T06-9906	0,4 N·m

*Suitable Insert brand is TGTC
**Suitable Insert brand is LMN

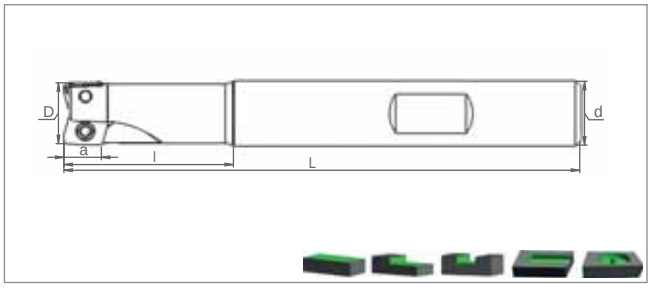

Ordering Code	Item Designation	Dimensions (mm)							Master Insert*
	ST90 AOMT 0702..		*D*	*d*	*Z*	*L*	*l*	*a*	
SM46306	ST90 AO07 D12 W12 L120 Z02-H	✓	12	12	2	120	30	7	AOMT 0702..
SM46313	ST90 AO07 D16 W16 L120 Z03-H	✓	16	16	3	120	30	7	
SM46320	ST90 AO07 D20 W20 L150 Z04-H	✓	20	20	4	150	40	7	
SM46337	ST90 AO07 D22 W20 L150 Z04-H	✓	22	20	4	150	30	7	

Size Designation	Master Insert*	Spare Parts		
		Screw	Torx Key	Screw Torque Value
				N·m
D12 - D22	AOMT 0702..	SSV M2.2x5-9503	STK-T06-9906	0,65

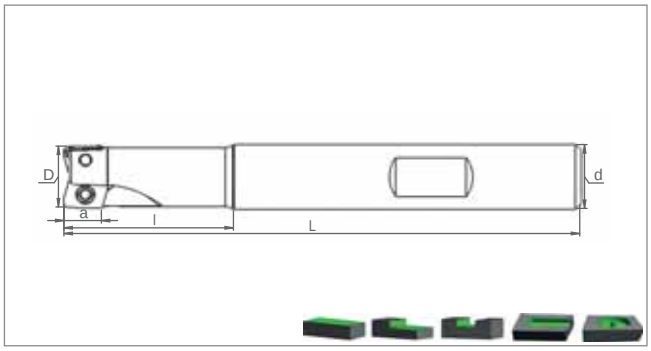

Ordering Code	Item Designation	Dimensions (mm)							Master Insert*
	ST90 AVMT 0402..		*D*	*d*	*Z*	*L*	*l*	*a*	
SM71803	ST90 AV04 D08 C08 L100 Z02-H	✓	8	8	2	100	20	4	AVMT 0402..
SM71810	ST90 AV04 D10 C10 L100 Z02-H	✓	10	10	2	100	20	4	
SM71827	ST90 AV04 D12 C12 L100 Z03-H	✓	12	12	3	100	20	4	

Size Designation	Master Insert*	Spare Parts		
		Screw	Torx Key	Screw Torque Value
				N·m
D08 - D12	AVMT 0402..	SSV M1.8x4-9501	STK-T06-9906	0,4

*Suitable Insert brand is TNGLY

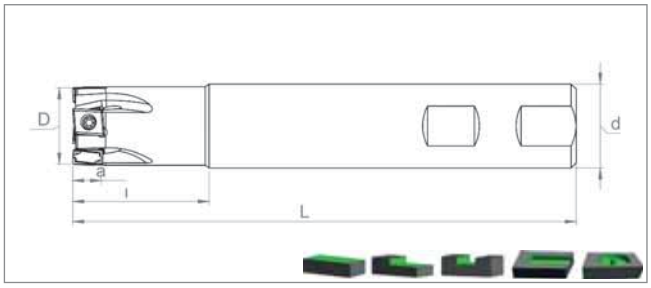

Ordering Code	Item Designation	Dimensions (mm)							Master Insert*
	ST90 LNHU 0904..		*D*	*d*	*Z*	*L*	*l*	*a*	
SM35836	ST90 LN09 D20 W20 L150 Z03-H	✓	20	20	3	150	40	9	LNHU 0904..
SM35843	ST90 LN09 D25 W25 L150 Z04-H	✓	25	25	4	150	40	9	
SM35850	ST90 LN09 D32 W32 L150 Z05-H	✓	32	32	5	150	40	9	

Size Designation	Master Insert*	Spare Parts		
		Screw	Torx Key	Screw Torque Value
				N·m
D20	LNHU 0904..**	SSV M3x6-9507	STK-T08-9908	1,9
D25 - D32		SSV M3x8-9508		

**Body corners should be modified for R2 and more radius inserts / R2 ve üstü radyüslü uçlarda takımın modifiye edilmesi gerekmektedir.

*Suitable Insert brand is WLTR

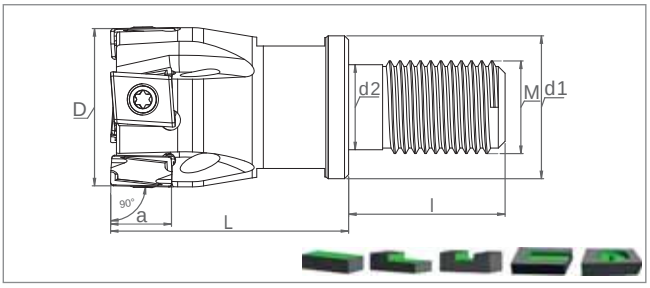

Ordering Code	Item Designation	Dimensions (mm)									Master Insert*
	MT90 LNHU 0904..		*D*	*Z*	*d1*	*d2*	*L*	*l*	*M*	*a*	
SM54677	MT90 LN09 D20 M10 L30 Z03-H	✓	20	3	18	10.5	30	19	10	9	LNHU 0904..
SM54684	MT90 LN09 D25 M12 L35 Z04-H	✓	25	4	21	12.5	35	23	12	9	
SM54691	MT90 LN09 D32 M16 L43 Z05-H	✓	32	5	29	17	43	23	16	9	

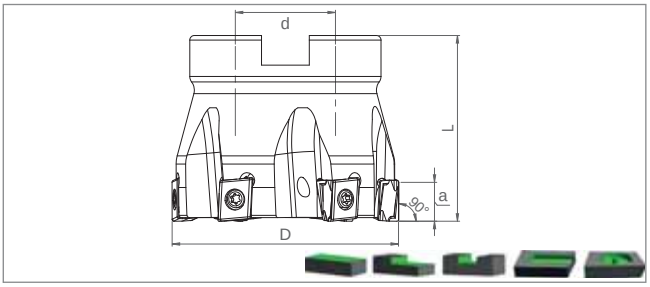

Ordering Code	Item Designation	Dimensions (mm)						Master Insert*
	TK90 LNHU / LNHU 0904.. / 1306..		*D*	*Z*	*d*	*L*	*a*	
SM32026	TK90 LN09 D40 A16 Z05-H	✓	40	5	16	40	8	LNHU 0904..
SM32040	TK90 LN09 D50 A22 Z06-H	✓	50	6	22	40	8	
SM32064	TK90 LN09 D63 A22 Z07-H	✓	63	7	22	40	8	
SM32088	TK90 LN09 D80 A27 Z09-H	✓	80	9	27	50	8	
SM53236	TK90 LNHU13 D40 A16 Z04-H	✓	40	4	16	40	12	LNHU 1306..
SM01392	TK90 LNHU13 D50 A22 Z05-H	✓	50	5	22	40	12	
SM53243	TK90 LNHU13 D63 A22 Z06-H	✓	63	6	22	40	12	
SM53250	TK90 LNHU13 D80 A27 Z07-H	✓	80	7	27	50	12	
SM53267	TK90 LNHU13 D100 A32 Z09-H	✓	100	9	32	50	12	

Cooling mounting screw is optional / See Page "526" for cooling mounting screws.
İçten su vermeli montaj vidaları opsiyoneldir. / Bkz. Sayfa "526" İçten su vermeli montaj vidaları için.

Size Designation	Master Insert*	Spare Parts		
		Screw	Torx Key	Screw Torque Value
D20	LNHU 0904..**	SSV M3x6-9507	STK-T08-9908	1,9
D25 - D80		SSV M3x8-9508		
D40 - D100	LNHU 1306..**	SSV M4x12x5-9529	STK-T15-9910	3,9

**Body corners should be modified for R2 and more radius inserts / R2 ve üstü radyüslü uçlarda takımın modifiye edilmesi gerekmektedir.
*Suitable Insert brand is WLTR

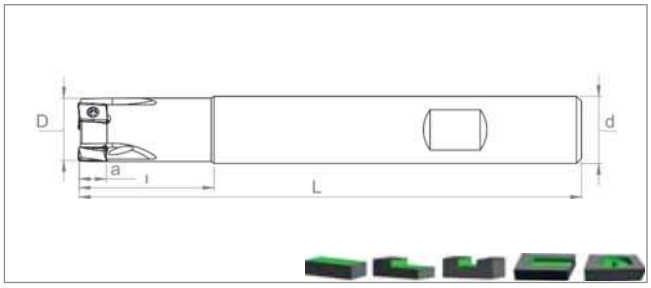

Ordering Code	Item Designation	Dimensions (mm)							Master Insert*
ST90 LN.. 0804.. / 1306..			*D*	*d*	*Z*	*L*	*l*	*a*	
SM35935	ST90 LN08 D16 W16 L150 Z02-H	✓	16	16	2	150	40	8	LN.. 0804..
SM35942	ST90 LN08 D20 W20 L150 Z03-H	✓	20	20	3	150	40	8	
SM35959	ST90 LN08 D25 W25 L150 Z04-H	✓	25	25	4	150	40	8	
SM35966	ST90 LN08 D30 W25 L150 Z04-H	✓	30	25	4	150	30	8	
SM35973	ST90 LN08 D32 W32 L150 Z05-H	✓	32	32	5	150	40	8	
SM59122	ST90 LN13 D32 W32 L150 Z03-H	✓	32	32	3	150	40	12.5	LN.. 1306..
SM59139	ST90 LN13 D40 W32 L150 Z04-H	✓	40	32	4	150	40	12.5	

Size Designation	Master Insert*	Spare Parts		
		Screw	Torx Key	Screw Torque Value
D16	LN.. 0804..**	SSV M2.5x6-9505	STK-T08-9908	1,0
D20 - D32		SSV M2.5x7-9506		
D32 - D40	LN.. 1306..**	SSV M4x10-9514	STK-T15-9910	3,9

**Body corners should be modified for R2 and more radius inserts / R2 ve üstü radyüslü uçlarda takımın modifiye edilmesi gerekmektedir.

*Suitable Insert brand is ISC

SMOXH CUTTING TOOLS
Kalitenin Yükselen Gücü

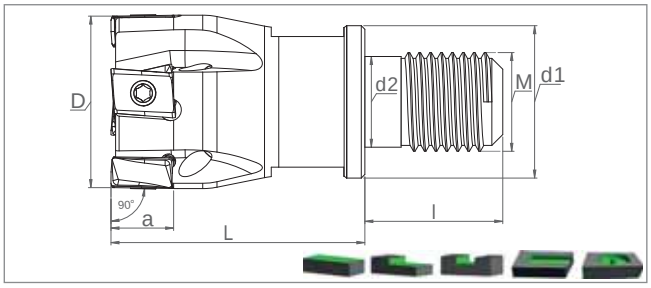

Ordering Code	Item Designation	Dimensions (mm)									Master Insert*
	MT90 LN.. 0804..		*D*	*Z*	*d1*	*d2*	*L*	*l*	*M*	*a*	
SM54950	MT90 LN08 D20 M10 L30 Z03-H	✓	20	3	18	10.5	30	19	10	8	LN.. 0804..
SM54967	MT90 LN08 D25 M12 L35 Z04-H	✓	25	4	21	12.5	35	23	12	8	
SM54974	MT90 LN08 D32 M16 L43 Z05-H	✓	32	5	29	17	43	23	16	8	

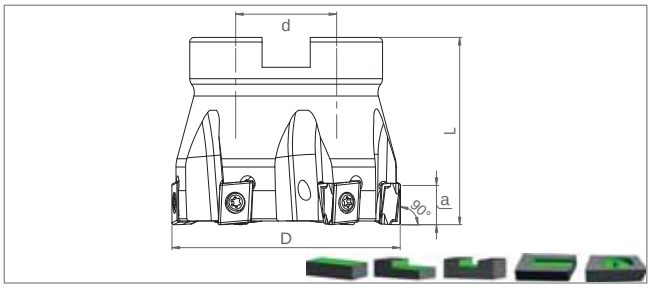

Ordering Code	Item Designation	Dimensions (mm)						Master Insert*
	TK90 LN.. 0804.. / 1306..		*D*	*Z*	*d*	*L*	*a*	
SM31845	TK90 LN08 D40 A16 Z05-H	✓	40	5	16	40	8	LN.. 0804..
SM31869	TK90 LN08 D50 A22 Z06-H	✓	50	6	22	40	8	
SM31883	TK90 LN08 D63 A22 Z08-H	✓	63	8	22	40	8	
SM31906	TK90 LN08 D80 A27 Z09-H	✓	80	9	27	50	8	
SM58446	TK90 LN13 D40 A16 Z04-H	✓	40	4	16	40	12.5	LN.. 1306..
SM31937	TK90 LN13 D50 A22 Z05-H	✓	50	5	22	40	12.5	
SM31951	TK90 LN13 D63 A22 Z06-H	✓	63	6	22	40	12.5	
SM31975	TK90 LN13 D80 A27 Z08-H	✓	80	8	27	50	12.5	
SM31999	TK90 LN13 D100 A32 Z09-H	✓	100	9	32	50	12.5	
SM32002	TK90 LN13 D125 B40 Z12	-	125	12	40	63	12.5	

Cooling mounting screw is optional / See Page “526” for cooling mounting screws.
İçten su vermeli montaj vidaları opsiyoneldir. / Bkz. Sayfa “526” İçten su vermeli montaj vidaları için.

Size Designation	Master Insert*	Spare Parts		
		Screw	Torx Key	Screw Torque Value
D20 - D80	LN..0804..*	SSV M2.5x7-9506	STK-T08-9908	1,0
D40 - D125	LN..1306..*	SSV M4x10-9514	STK-T15-9910	3,9

**Body corners should be modified for R2 and more radius inserts / R2 ve üstü radyüslü uçlarda takımın modifiye edilmesi gerekmektedir.
*Suitable Insert brand is ISC

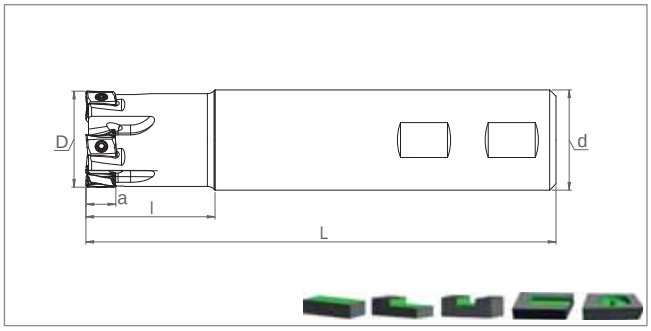

Ordering Code	Item Designation	Dimensions (mm)							Master Insert*
	ST90 LOEX 0804..		*D*	*d*	*Z*	*L*	*l*	*a*	
SM58668	ST90 LO08 D20 W20 L150 Z03-H	✓	20	20	3	150	40	8	LOEX 0804..
SM58675	ST90 LO08 D25 W25 L150 Z04-H	✓	25	25	4	150	40	8	
SM58682	ST90 LO08 D32 W32 L150 Z05-H	✓	32	32	5	150	40	8	

Size Designation	Master Insert*	Spare Parts		
		Screw	Torx Key	Screw Torque Value
				N·m
D20 - D32	LOEX 0804..**	SSV M2.5x7-9506	STK-T08-9908	1,0

**Body corners should be modified for R2 and more radius inserts / R2 ve üstü radyüslü uçlarda takımın modifiye edilmesi gerekmektedir.

*Suitable Insert brand is SCO

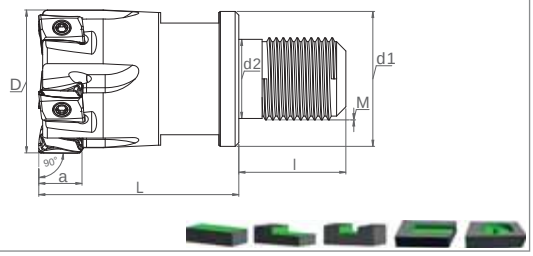

Ordering Code	Item Designation	Dimensions (mm)									Master Insert*
	MT90 LOEX 0804..		*D*	*Z*	*d1*	*d2*	*L*	*l*	*M*	*a*	
SM58699	MT90 LO08 D20 M10 L30 Z03-H	✓	20	3	18	10.5	30	19	10	8	LOEX 0804..
SM58705	MT90 LO08 D25 M12 L35 Z04-H	✓	25	4	21	12.5	35	23	12	8	
SM58712	MT90 LO08 D32 M16 L43 Z05-H	✓	32	5	29	17	43	23	16	8	

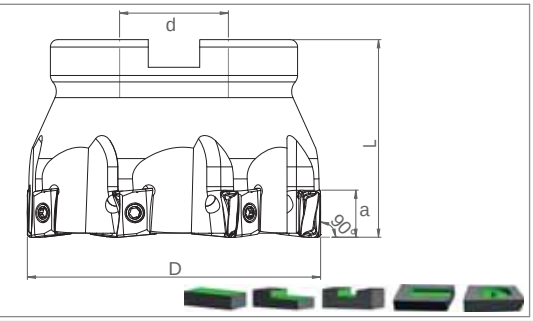

Ordering Code	Item Designation	Dimensions (mm)						Master Insert*
	TK90 LOEX 0804.. / 1207..		*D*	*Z*	*d*	*L*	*a*	
SM56893	TK90 LO08 D40 A16 Z06-H	✓	40	6	16	40	8	LOEX 0804..
SM56909	TK90 LO08 D50 A22 Z07-H	✓	50	7	22	40	8	
SM56916	TK90 LO08 D63 A22 Z08-H	✓	63	8	22	40	8	
SM58729	TK90 LO12 D40 A16 Z04-H	✓	40	4	16	40	12	LOEX 1207..
SM60333	TK90 LO12 D50 A22 Z04-H	✓	50	4	22	40	12	
SM58736	TK90 LO12 D50 A22 Z05-H	✓	50	5	22	40	12	
SM58743	TK90 LO12 D63 A22 Z06-H	✓	63	6	22	40	12	
SM58750	TK90 LO12 D80 A27 Z07-H	✓	80	7	27	50	12	
SM60340	TK90 LO12 D80 A27 Z08-H	✓	80	8	27	50	12	
SM58767	TK90 LO12 D100 A32 Z09-H	✓	100	9	32	50	12	
SM62528	TK90 LO12 D125 B40 Z12	-	125	12	40	63	12	
SM62535	TK90 LO12 D160 C40 Z15	-	160	15	40	63	12	

Cooling mounting screw is optional / See Page "526" for cooling mounting screws.
İçten su vermeli montaj vidaları opsiyoneldir. / Bkz. Sayfa "526" İçten su vermeli montaj vidaları için.

Size Designation	Master Insert*	Spare Parts		
		Screw	Torx Key	Screw Torque Value N·m
D20 - D63	LOEX 0804..**	SSV M2.5x7-9506	STK-T08-9908	1,0
D40 - D160	LOEX 1207..**	SSV M3.5x12-9526	STK-T15-9910	3,9

**Body corners should be modified for R2 and more radius inserts / R2 ve üstü radyüslü uçlarda takımın modifiye edilmesi gerekmektedir.
*Suitable Insert brand is SCO

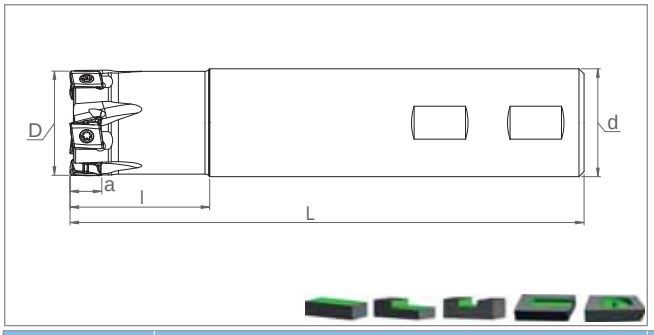

Ordering Code	Item Designation	Dimensions (mm)							Master Insert*
	ST90 LPHU / LPKU 0904..		*D*	*d*	*Z*	*L*	*l*	*a*	
SM58491	ST90 LP09 D20 W20 L150 Z03-H	✓	20	20	3	150	40	8.3	LP.U 0904..
SM58507	ST90 LP09 D25 W25 L150 Z04-H	✓	25	25	4	150	40	8.3	
SM58514	ST90 LP09 D32 W32 L150 Z05-H	✓	32	32	5	150	40	8.3	

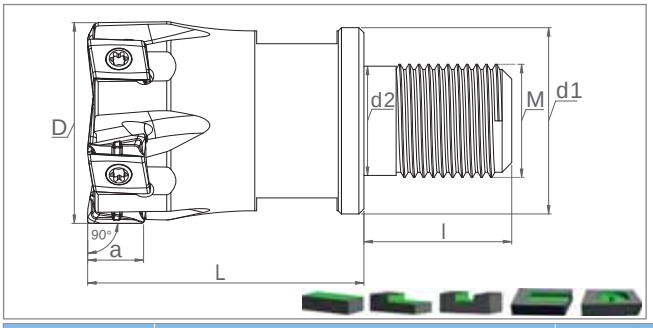

Ordering Code	Item Designation	Dimensions (mm)									Master Insert*
	MT90 LPHU / LPKU 0904..		*D*	*Z*	*d1*	*d2*	*L*	*l*	*M*	*a*	
SM58521	MT90 LP09 D20 M10 L30 Z03-H	✓	20	3	18	10.5	30	19	10	8.3	LP.U 0904..
SM58538	MT90 LP09 D25 M12 L35 Z04-H	✓	25	4	21	12.5	35	23	12	8.3	
SM58545	MT90 LP09 D32 M16 L43 Z05-H	✓	32	5	29	17	43	23	16	8.3	

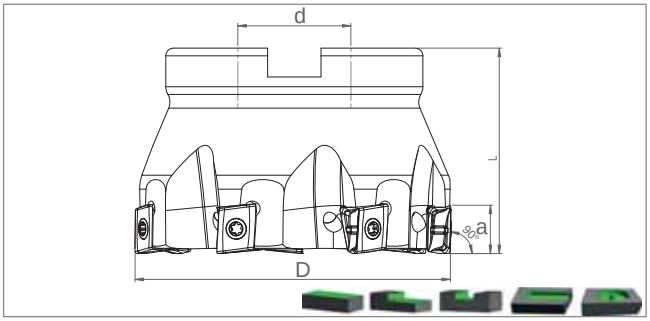

Ordering Code	Item Designation	Dimensions (mm)						Master Insert*
	TK90 LPHU / LPKU 0904..		*D*	*Z*	*d*	*L*	*a*	
SM55278	TK90 LP09 D40 A16 Z05-H	✓	40	5	16	40	8.3	LP.U 0904..
SM55285	TK90 LP09 D50 A22 Z06-H	✓	50	6	22	40	8.3	
SM55292	TK90 LP09 D63 A22 Z07-H	✓	63	7	22	40	8.3	

Cooling mounting screw is optional / See Page "526" for cooling mounting screws.
İçten su vermeli montaj vidaları opsiyoneldir. / Bkz. Sayfa "526" İçten su vermeli montaj vidaları için.

Size Designation	Master Insert*	Spare Parts		
		Screw	Torx Key	Screw Torque Value
D20 - D32	LP.U 0904..**	SSV M3x7-9527	STK-T08-9908	1,9
D40 - D63		SSV M3x8-9508		

**Body corners should be modified for R2 and more radius inserts / R2 ve üstü radyüslü uçlarda takımın modifiye edilmesi gerekmektedir.
*Suitable Insert brand is TGTC

SMOXH CUTTING TOOLS
Kalitenin Yükselen Gücü

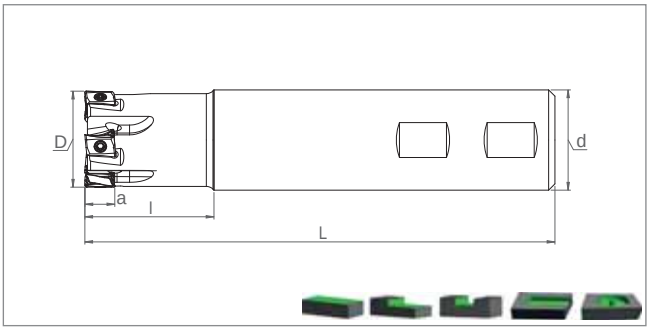

Ordering Code	Item Designation	Dimensions (mm)						Master Insert*
	ST90 LMMU 1107..		*D*	*d*	*Z*	*L*	*l*	*a*	
SM71865	ST90 LM11 D32 W32 L150 Z03-H	✓	32	32	3	150	40	9.70	LMMU 1107..
SM71872	ST90 LM11 D40 W32 L150 Z04-H	✓	40	40	4	150	40	9.70	

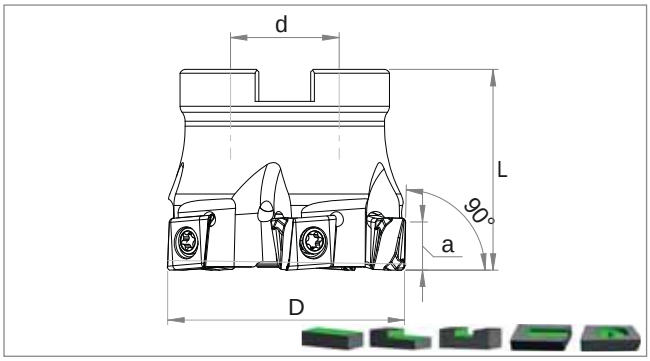

Ordering Code	Item Designation	Dimensions (mm)						Master Insert*
	TK90 LMMU 1107..		*D*	*Z*	*d*	*L*	*a*	
SM71889	TK90 LM11 D50 A22 Z05-H	✓	50	5	22	40	9.70	LMMU 1107..
SM71896	TK90 LM11 D63 A22 Z06-H	✓	63	6	22	40	9.70	
SM71902	TK90 LM11 D80 A27 Z07-H	✓	80	7	27	50	9.70	

**Body corners should be modified for R2 and more radius inserts / R2 ve üstü radyüslü uçlarda takımın modifiye edilmesi gerekmektedir. ■

Cooling mounting screw is optional / See Page "526" for cooling mounting screws.
İçten su vermeli montaj vidaları opsiyoneldir. / Bkz. Sayfa "526" İçten su vermeli montaj vidaları için.

Size Designation	Master Insert*	Spare Parts		
		Screw	Torx Key	Screw Torque Value
				N·m
D32 - D80	LMMU 1107..	SSV M3.5x12-9526	STK-T15-9910	3,9

*Suitable Insert brand is TNGLY

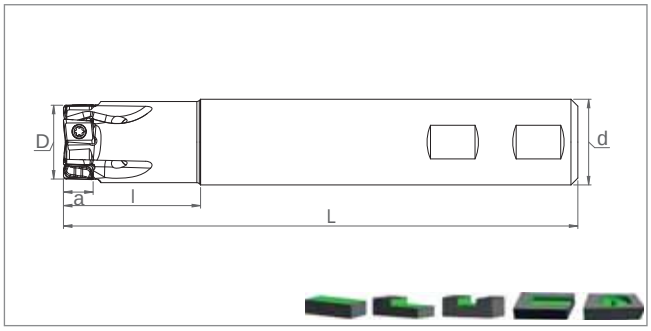

Ordering Code	Item Designation	Dimensions (mm)							Master Insert*
	ST90 LOGU 0904		*D*	*d*	*Z*	*L*	*l*	*a*	
SM55094	ST90 LO09 D20 W20 L150 Z03-H	✓	20	20	3	150	40	8	LOGU 0904..
SM55100	ST90 LO09 D25 W25 L150 Z04-H	✓	25	25	4	150	40	8	
SM55117	ST90 LO09 D32 W32 L150 Z05-H	✓	32	32	5	150	40	8	

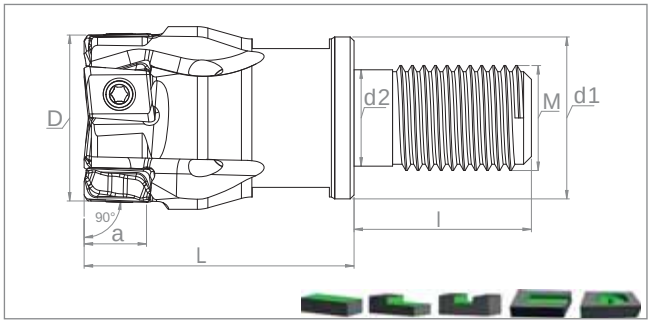

Ordering Code	Item Designation	Dimensions (mm)									Master Insert*
	MT90 LOGU 0904		*D*	*Z*	*d1*	*d2*	*L*	*l*	*M*	*a*	
SM52772	MT90 LO09 D20 M10 L30 Z03-H	✓	20	3	18	10.5	30	19	10	8	LOGU 0904..
SM52789	MT90 LO09 D25 M12 L35 Z04-H	✓	25	4	21	12.5	35	23	12	8	
SM52796	MT90 LO09 D32 M16 L43 Z05-H	✓	32	5	29	17	43	23	16	8	

Size Designation	Master Insert*	Spare Parts		
		Screw	Torx Key	Screw Torque Value
				N·m
D20 - D32	LOGU 0904..**	SSV M2.5x7-9506	STK-T08-9908	1,0

**Body corners should be modified for R2 and more radius inserts / R2 ve üstü radyüslü uçlarda takımın modifiye edilmesi gerekmektedir.

*Suitable Insert brand is MTSBH

SMOXH CUTTING TOOLS
Kalitenin Yükselen Gücü

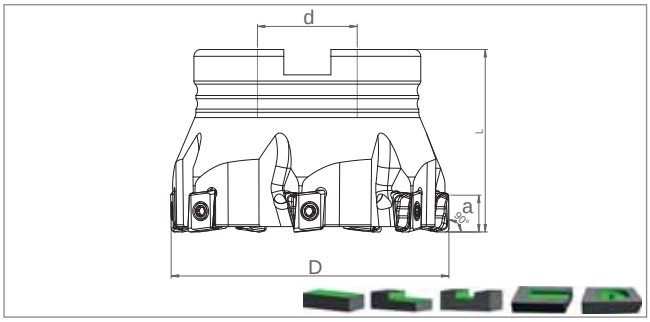

Ordering Code	Item Designation	Dimensions (mm)						Master Insert*
	TK90 LOGU 0904		*D*	*Z*	*d*	*L*	*a*	
SM52734	TK90 LO09 D40 A16 Z05-H	✓	40	5	16	40	8	LOGU 0904..
SM52741	TK90 LO09 D50 A22 Z06-H	✓	50	6	22	40	8	
SM52758	TK90 LO09 D63 A22 Z07-H	✓	63	7	22	40	8	
SM52765	TK90 LO09 D80 A27 Z09-H	✓	80	9	27	50	8	

Cooling mounting screw is optional / See Page "526" for cooling mounting screws.
İçten su vermeli montaj vidaları opsiyoneldir. / Bkz. Sayfa "526" İçten su vermeli montaj vidaları için.

Size Designation	Master Insert*	Spare Parts		
		Screw	Torx Key	Screw Torque Value
D20 - D80	LOGU 0904..**	SSV M2.5x7-9506	STK-T08-9908	1,0 N·m

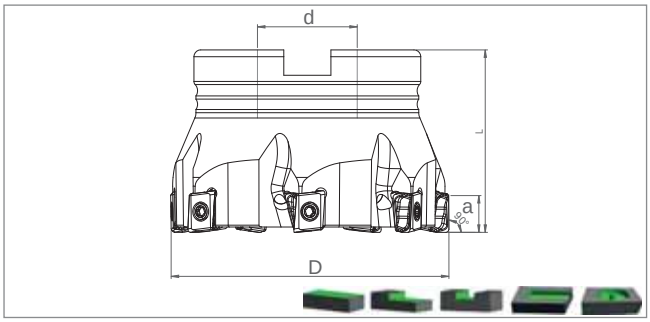

Ordering Code	Item Designation	Dimensions (mm)						Master Insert**
	TK90 LNHU 1306..		*D*	*Z*	*d*	*L*	*a*	
SM00821	TK90 LN13A D50 A22 Z05-H	✓	50	5	22	40	12	LNHU 1306..
SM69749	TK90 LN13A D63 A22 Z07-H	✓	63	7	22	40	12	
SM69756	TK90 LN13A D80 A27 Z09-H	✓	80	9	27	50	12	
SM69763	TK90 LN13A D100 A32 Z10-H	✓	100	10	32	50	12	

Cooling mounting screw is optional / See Page "526" for cooling mounting screws.
İçten su vermeli montaj vidaları opsiyoneldir. / Bkz. Sayfa "526" İçten su vermeli montaj vidaları için.

Size Designation	Master Insert*	Spare Parts		
		Screw	Torx Key	Screw Torque Value
D50 - D100	LNHU 1306..**	SSV M4x12x5-9511	STK-T15-9910	3,9 N·m

***Body corners should be modified for R2 and more radius inserts / R2 ve üstü radyüslü uçlarda takımın modifiye edilmesi gerekmektedir. ■
*Suitable Insert brand is MTSBH
**Suitable Insert brand is ACHTK

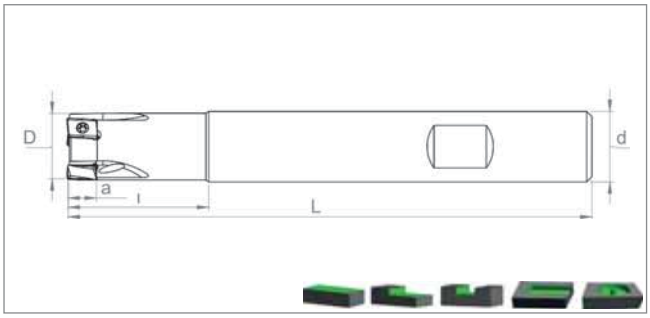

Ordering Code	Item Designation	Dimensions (mm)							Master Insert*
	ST90 LN..1106..T490		*D*	*d*	*Z*	*L*	*l*	*a*	
SM59016	ST90 LN11 D25 W25 L150 Z03-H	✓	25	25	3	150	40	9	LN.. 1106.. T490
SM59023	ST90 LN11 D32 W32 L150 Z04-H	✓	32	32	4	150	40	9	

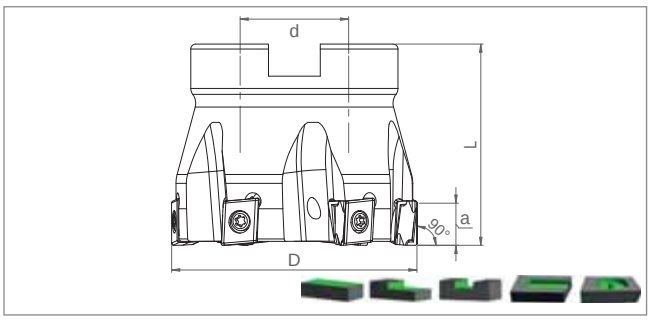

Ordering Code	Item Designation	Dimensions (mm)						Master Insert*
	TK90 LN..1106..T490		*D*	*Z*	*d*	*L*	*a*	
SM55124	TK90 LN11 D40 A16 Z04-H	✓	40	4	16	40	9	LN.. 1106.. T490
SM55131	TK90 LN11 D40 A16 Z05-H	✓	40	5	16	40	9	
SM55148	TK90 LN11 D50 A22 Z05-H	✓	50	5	22	40	9	
SM55155	TK90 LN11 D50 A22 Z06-H	✓	50	6	22	40	9	
SM55162	TK90 LN11 D63 A22 Z06-H	✓	63	6	22	40	9	
SM55179	TK90 LN11 D63 A22 Z09-H	✓	63	9	22	40	9	
SM55186	TK90 LN11 D80 A27 Z08-H	✓	80	8	27	50	9	
SM55193	TK90 LN11 D80 A27 Z11-H	✓	80	11	27	50	9	

Size Designation	Master Insert*	Spare Parts		
		Screw	Torx Key	Screw Torque Value
D25 - D32	LN.. 1106..**	SSV M3.5x10-9511	STK-T15-9910	2,7
D40 - D80		SSV M3.5x12-9526		

**Body corners should be modified for R2 and more radius inserts / R2 ve üstü radyüslü uçlarda takımın modifiye edilmesi gerekmektedir.

*Suitable Insert brand is ISC

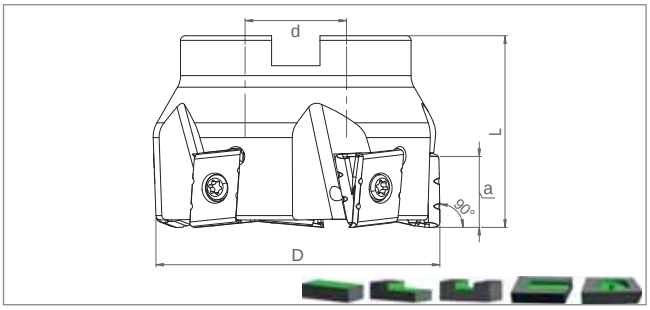

Ordering Code	Item Designation	Dimensions (mm)						Master Insert*
	TK90 LNKT 1506..		*D*	*Z*	*d*	*L*	*a*	
SM31500	TK90 LNKT15 D50 A22 Z04-H	✓	50	4	22	40	12	LNKT 1506..
SM31524	TK90 LNKT15 D63 A22 Z05-H	✓	63	5	22	40	12	
SM31548	TK90 LNKT15 D80 A27 Z06-H	✓	80	6	27	50	12	
SM31562	TK90 LNKT15 D100 A32 Z07-H	✓	100	7	32	50	12	
SM31579	TK90 LNKT15 D125 B40 Z08	-	125	8	40	63	12	

Size Designation	Master Insert*	Spare Parts		
		Screw	Torx Key	Screw Torque Value
D50 - D125	LNKT 1506..	SSV M4x12-9515	STK-T15-9910	3,9 N·m

Cooling mounting screw is optional / See Page "526" for cooling mounting screws.
İçten su vermeli montaj vidaları opsiyoneldir. / Bkz. Sayfa "526" İçten su vermeli montaj vidaları için.

*Suitable Insert brand is ZCC-CT

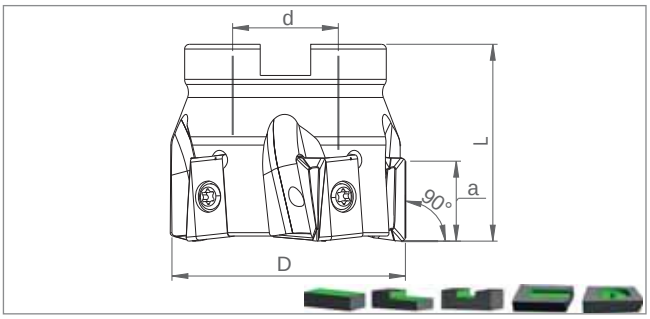

Ordering Code	Item Designation	Dimensions (mm)						Master Insert*
	TK90 LNKT 1707..		*D*	*Z*	*d*	*L*	*a*	
SM44111	TK90 LN17 D50 A22 Z05-H	✓	50	5	22	40	16.5	LNKT 1707..
SM44128	TK90 LN17 D63 A22 Z06-H	✓	63	6	22	40	16.5	
SM44135	TK90 LN17 D80 A27 Z07-H	✓	80	7	27	50	16.5	
SM44142	TK90 LN17 D100 A32 Z09-H	✓	100	9	32	50	16.5	

Size Designation	Master Insert*	Spare Parts		
		Screw	Torx Key	Screw Torque Value
D50 - D100	LNKT 1707..	SSV M4x12-9515	STK-T15-9910	3,9 N·m

Cooling mounting screw is optional / See Page "526" for cooling mounting screws.
İçten su vermeli montaj vidaları opsiyoneldir. / Bkz. Sayfa "526" İçten su vermeli montaj vidaları için.

*Suitable Insert brand is KRLY

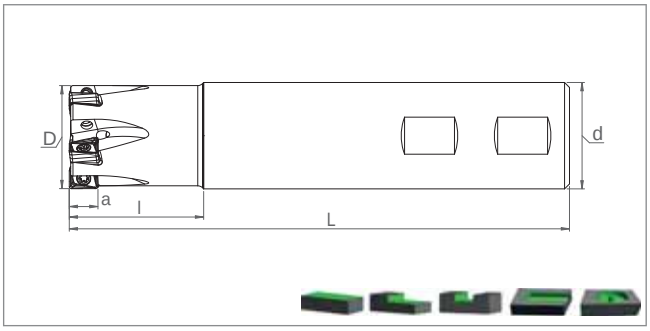

Ordering Code	Item Designation	Dimensions (mm)							Master Insert*
	ST90 ANKX / ANCX 0904..		*D*	*d*	*Z*	*L*	*l*	*a*	
SM58583	ST90 AN09 D16 W16 L150 Z02-H	✓	16	16	2	150	40	8	AN.X 0904..
SM58590	ST90 AN09 D20 W20 L150 Z03-H	✓	20	20	3	150	40	8	
SM58606	ST90 AN09 D25 W25 L150 Z04-H	✓	25	25	4	150	40	8	
SM58613	ST90 AN09 D32 W32 L150 Z05-H	✓	32	32	5	150	40	8	

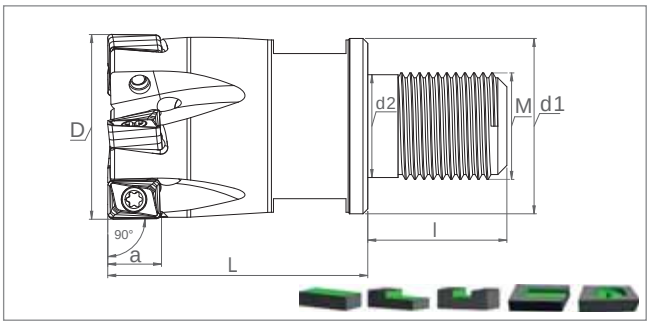

Ordering Code	Item Designation	Dimensions (mm)									Master Insert*
	MT90 ANKX / ANCX 0904..		*D*	*Z*	*d1*	*d2*	*L*	*l*	*M*	*a*	
SM58552	MT90 AN09 D20 M10 L30 Z03-H	✓	20	3	18	10.5	30	19	10	8	AN.X 0904..
SM58569	MT90 AN09 D25 M12 L35 Z04-H	✓	25	4	21	12.5	35	23	12	8	
SM58576	MT90 AN09 D32 M16 L43 Z05-H	✓	32	5	29	17	43	23	16	8	

Size Designation	Master Insert*	Spare Parts		
		Screw	Torx Key	Screw Torque Value
				N·m
D16 - D32	AN.X 0904..*	SSV M3x6.5 LG-9509	STK-T08-9908	1,9

**Body corners should be modified for R2 and more radius inserts / R2 ve üstü radyüslü uçlarda takımın modifiye edilmesi gerekmektedir.

*Suitable Insert brand is ISC

SMOXH CUTTING TOOLS
Kalitenin Yükselen Gücü

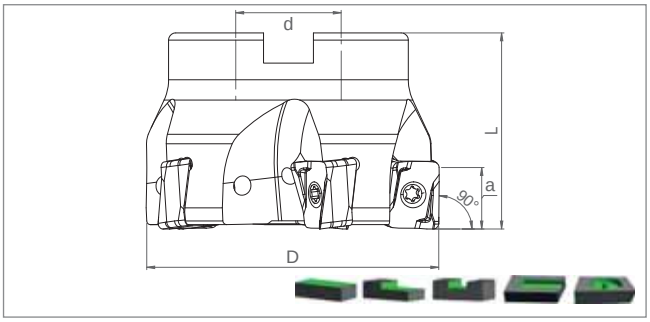

Ordering Code	Item Designation	Dimensions (mm)						Master Insert*
	TK90 ANKX / ANCX 0904.. / 1205.. / 1706..		*D*	*Z*	*d*	*L*	*a*	
SM54615	TK90 AN09 D40 A16 Z05-H	✓	40	5	16	40	8	AN.X 0904..
SM54622	TK90 AN09 D40 A16 Z06-H	✓	40	6	16	40	8	
SM54646	TK90 AN09 D50 A22 Z06-H	✓	50	6	22	40	8	
SM54639	TK90 AN09 D50 A22 Z07-H	✓	50	7	22	40	8	
SM54653	TK90 AN09 D63 A22 Z08-H	✓	63	8	22	40	8	
SM54660	TK90 AN09 D63 A22 Z09-H	✓	63	9	22	40	8	
SM31678	TK90 AN12 D50 A22 Z04-H	✓	50	4	22	40	12	AN.X 1205..
SM31692	TK90 AN12 D63 A22 Z05-H	✓	63	5	22	40	12	
SM31715	TK90 AN12 D80 A27 Z07-H	✓	80	7	27	50	12	
SM31739	TK90 AN12 D100 A32 Z09-H	✓	100	9	32	50	12	
SM31753	TK90 AN17 D50 A22 Z04-H	✓	50	4	22	40	16.3	AN.X 1706..
SM31777	TK90 AN17 D63 A22 Z06-H	✓	63	6	22	40	16.3	
SM31791	TK90 AN17 D80 A27 Z07-H	✓	80	7	27	50	16.3	
SM31814	TK90 AN17 D100 A32 Z08-H	✓	100	8	32	50	16.3	
SM31821	TK90 AN17 D125 B40 Z10	-	125	10	40	63	16.3	

Cooling mounting screw is optional / See Page "526" for cooling mounting screws.
İçten su vermeli montaj vidaları opsiyoneldir. / Bkz. Sayfa "526" İçten su vermeli montaj vidaları için.

Size Designation	Master Insert*	Spare Parts		
		Screw	Torx Key	Screw Torque Value
				N·m
D40 - D63	AN.X 0904..*	SSV M3x6.5 LG-9509	STK-T08-9908	1,9
D50 - D63	AN.X 1205..*	SSV M4x9x5-9528	STK-T15-9910	3,9
D80 - D100		SSV M4x12x5-9529		
D50 - D125	AN.X 1706..*	SSV M5x13-9519	STK-T20-9911	5,5

**Body corners should be modified for R2 and more radius inserts / R2 ve üstü radyüslü uçlarda takımın modifiye edilmesi gerekmektedir.
*Suitable Insert brand is ISC

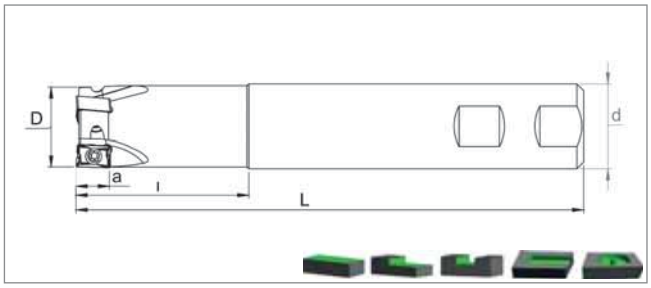

Ordering Code	Item Designation	Dimensions (mm)							Master Insert*
	ST90 LN.X 1006.. / 1510..		*D*	*d*	*Z*	*L*	*l*	*a*	
SM22911	ST90 LN10 D16 W16 L120 Z01	-	16	16	1	120	30	9	LN.X 1006..
SM51614	ST90 LN10 D16 W16 L120 Z01-H	✓	16	16	1	120	30	9	
SM22904	ST90 LN10 D18 W16 L120 Z02	-	18	16	2	120	30	9	
SM22898	ST90 LN10 D20 W20 L150 Z02	-	20	20	2	150	40	9	
SM51621	ST90 LN10 D20 W20 L150 Z02-H	✓	20	20	2	150	40	9	
SM26711	ST90 LN10 D22 W20 L150 Z02	-	22	20	2	150	30	9	
SM22881	ST90 LN10 D25 W25 L150 Z03	-	25	25	3	150	40	9	
SM51638	ST90 LN10 D25 W25 L150 Z03-H	✓	25	25	3	150	40	9	
SM22874	ST90 LN10 D32 W32 L150 Z04	-	32	32	4	150	40	9	
SM22867	ST90 LN10 D40 W32 L150 Z05	-	40	32	5	150	40	9	
SM22805	ST90 LN15 D32 W32 L150 Z02	-	32	32	2	150	40	14	LN.X 1510..
SM51645	ST90 LN15 D32 W32 L150 Z02-H	✓	32	32	2	150	40	14	
SM22812	ST90 LN15 D32 C32 L250 Z02	-	32	32	2	250	180	14	
SM22775	ST90 LN15 D32 C32 L300 Z02	-	32	32	2	300	230	14	
SM22829	ST90 LN15 D35 W32 L150 Z03	-	35	32	3	150	30	14	
SM22836	ST90 LN15 D35 C32 L250 Z03	-	35	32	3	250	50	14	
SM22782	ST90 LN15 D35 C32 L300 Z03	-	35	32	3	300	50	14	
SM22843	ST90 LN15 D40 W32 L150 Z03	-	40	32	3	150	40	14	
SM51652	ST90 LN15 D40 W32 L150 Z03-H	✓	40	32	3	150	40	14	
SM22850	ST90 LN15 D40 C32 L250 Z03	-	40	32	3	250	50	14	
SM22799	ST90 LN15 D40 C32 L300 Z03	-	40	32	3	300	50	14	

Size Designation	Master Insert*	Spare Parts		
		Screw	Torx Key	Screw Torque Value
				N·m
D16 - D22	LN.X 1006..	SSV M3x6-9507	STK-T08-9908	1,9
D25 - D40		SSV M3x8-9508		
D32 - D40	LN.X 1510..	SSV M4x14-9516	STK-T15-9910	3,9

*Suitable Insert brand is KRLY

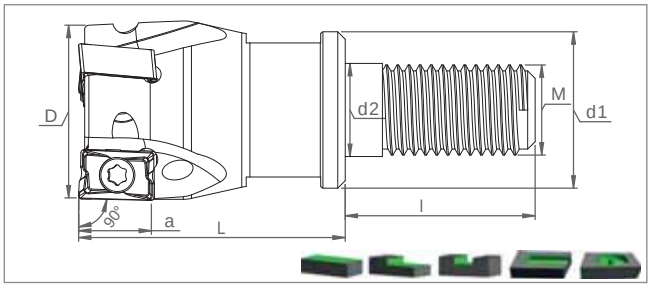

Ordering Code	Item Designation	Dimensions (mm)									Master Insert*
	MT90 LN.X 1006..		*D*	*Z*	*d1*	*d2*	*L*	*l*	*M*	*a*	
SM47549	MT90 LN10 D20 M10 L30 Z02-H	✓	20	2	18	10.5	30	19	10	9	LN.X 1006..
SM47556	MT90 LN10 D25 M12 L35 Z03-H	✓	25	3	21	12.5	35	23	12	9	
SM47563	MT90 LN10 D32 M16 L43 Z04-H	✓	32	4	29	17	43	23	16	9	

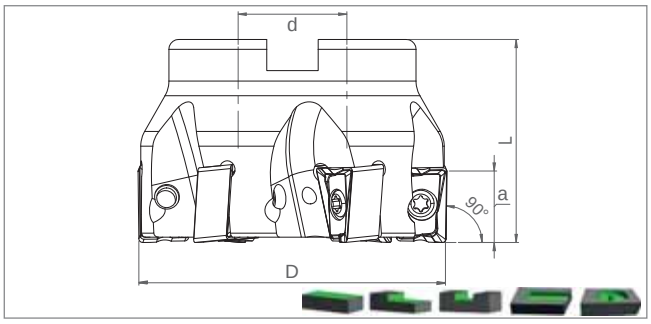

Ordering Code	Item Designation	Dimensions (mm)						Master Insert*
	TK90 LN.X 1006.. / 1510..		*D*	*Z*	*d*	*L*	*a*	
SM22690	TK90 LN10 D40 A16 Z05-H	✓	40	5	16	40	9	LN.X 1006..
SM28456	TK90 LN10 D50 A22 Z06-H	✓	50	6	22	40	9	
SM22713	TK90 LN10 D63 A22 Z07-H	✓	63	7	22	40	9	
SM28432	TK90 LN15 D50 A22 Z05-H	✓	50	5	22	40	14	LN.X 1510..
SM28425	TK90 LN15 D63 A22 Z06-H	✓	63	6	22	40	14	
SM28418	TK90 LN15 D80 A27 Z07-H	✓	80	7	27	50	14	
SM28401	TK90 LN15 D100 A32 Z09-H	✓	100	9	32	50	14	
SM38479	TK90 LN15 D125 B40 Z10	-	125	10	40	63	14	
SM38486	TK90 LN15 D160 C40 Z12	-	160	12	40	63	14	

Cooling mounting screw is optional / See Page “526” for cooling mounting screws.
İçten su vermeli montaj vidaları opsiyoneldir. / Bkz. Sayfa “526” İçten su vermeli montaj vidaları için.

Size Designation	Master Insert*	Spare Parts		
		Screw	Torx Key	Screw Torque Value N·m
D20	LN.X 1006..	SSV M3x6-9507	STK-T08-9908	1,9
D25 - D32		SSV M3x8-9508		
D50 - D160	LN.X 1510..	SSV M4x12x5-9529	STK-T15-9910	3,9

*Suitable Insert brand is KRLY

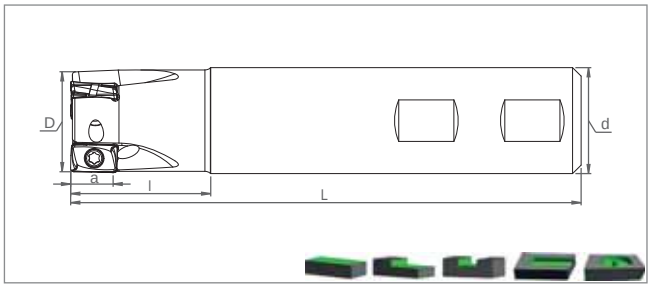

Ordering Code	Item Designation	Dimensions (mm)							Master Insert*
	ST90 LOMU 1004..		*D*	*d*	*Z*	*L*	*l*	*a*	
SM51607	ST90 LM10 D16 W16 L120 Z02-H	✓	16	16	2	120	30	10	LOMU 1004..
SM43701	ST90 LM10 D16 W16 L150 Z02-H	✓	16	16	2	150	40	10	
SM53984	ST90 LM10 D18 W16 L150 Z02-H	✓	18	16	2	150	30	10	
SM49765	ST90 LM10 D20 W20 L120 Z03-H	✓	20	20	3	120	30	10	
SM43718	ST90 LM10 D20 W20 L150 Z03-H	✓	20	20	3	150	40	10	
SM61118	ST90 LM10 D21 W20 L150 Z03-H	✓	21	20	3	150	30	10	
SM53991	ST90 LM10 D22 W20 L150 Z03-H	✓	22	20	3	150	30	10	
SM39858	ST90 LM10 D25 W25 L120 Z03-H	✓	25	25	3	120	30	10	
SM43725	ST90 LM10 D25 W25 L150 Z03-H	✓	25	25	3	150	40	10	
SM54004	ST90 LM10 D26 W25 L150 Z03-H	✓	26	25	3	150	30	10	
SM49772	ST90 LM10 D32 W32 L120 Z04-H	✓	32	32	4	120	30	10	
SM49789	ST90 LM10 D32 W32 L150 Z04-H	✓	32	32	4	150	40	10	
SM54011	ST90 LM10 D33 W32 L150 Z04-H	✓	33	32	4	150	30	10	

Size Designation	Master Insert*	Spare Parts		
		Screw	Torx Key	Screw Torque Value
				N·m
D16 - D33	LOMU 1004..**	SSV M3x6.5 LG-9509	STK-T08-9908	1,9

**Body corners should be modified for R2 and more radius inserts / R2 ve üstü radyüslü uçlarda takımın modifiye edilmesi gerekmektedir.

*Suitable Insert brand is KRYC

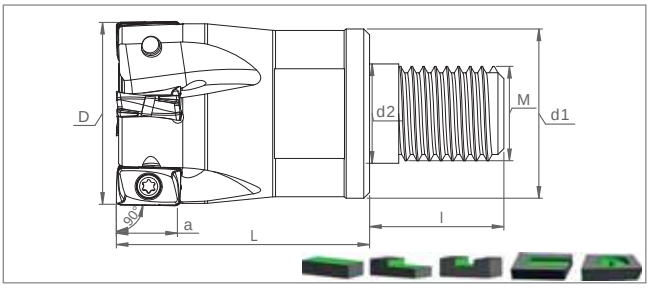

Ordering Code	Item Designation	Dimensions (mm)									Master Insert*
	MT90 LOMU 1003..		*D*	*Z*	*d1*	*d2*	*L*	*l*	*M*	*a*	
SM50464	MT90 LM10 D16 M08 L25 Z02-H	✓	16	2	15	8.5	25	17	8	10	LOMU 1004..
SM43749	MT90 LM10 D20 M10 L30 Z03-H	✓	20	3	18	10.5	30	19	10	10	
SM43756	MT90 LM10 D25 M12 L35 Z03-H	✓	25	3	21	12.5	35	23	12	10	
SM43763	MT90 LM10 D32 M16 L43 Z04-H	✓	32	4	29	17	43	23	16	10	

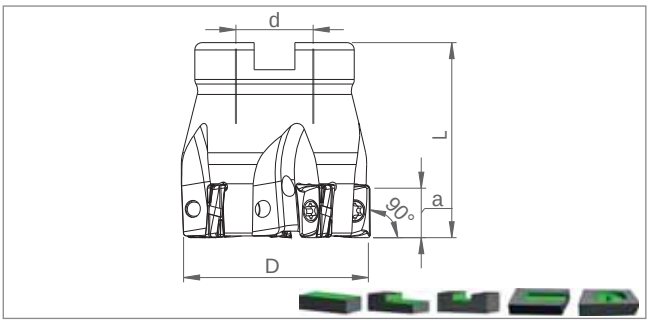

Ordering Code	Item Designation	Dimensions (mm)						Master Insert*
	TK90 LOMU 1003.. / 1505..		*D*	*Z*	*d*	*L*	*a*	
SM46238	TK90 LM10 D40 A16 Z05-H	✓	40	5	16	40	10	LOMU 1004..
SM46245	TK90 LM10 D50 A22 Z05-H	✓	50	5	22	40	10	
SM61262	TK90 LM10 D50 A22 Z07-H	✓	50	7	22	40	10	
SM46252	TK90 LM10 D63 A22 Z06-H	✓	63	6	22	40	10	
SM46191	TK90 LM15 D40 A16 Z04-H	✓	40	4	16	40	15	LOMU 1505..
SM46207	TK90 LM15 D50 A22 Z05-H	✓	50	5	22	40	15	
SM46214	TK90 LM15 D63 A22 Z06-H	✓	63	6	22	40	15	
SM46221	TK90 LM15 D80 A27 Z07-H	✓	80	7	27	50	15	
SM01828	TK90 LM15 D100 A32 Z08-H	✓	100	8	32	50	15	
SM63839	**TK90 LM15 D160 C40 Z12**	✓	**160**	**12**	**40**	**63**	**15**	

Cooling mounting screw is optional / See Page "526" for cooling mounting screws.
İçten su vermeli montaj vidaları opsiyoneldir. / Bkz. Sayfa "526" İçten su vermeli montaj vidaları için.

Size Designation	Master Insert*	Spare Parts		
		Screw	Torx Key	Screw Torque Value N·m
D16 - D63	LOMU 1004..**	SSV M3x6.5 LG-9509	STK-T08-9908	1,9
D40 - D63	LOMU 1505..**	SSV M4x9x5-9528	STK-T15-9910	3,9
D80 - D160		SSV M4x12x5-9529		

**Body corners should be modified for R2 and more radius inserts / R2 ve üstü radyüslü uçlarda takımın modifiye edilmesi gerekmektedir.
*Suitable Insert brand is KRYC

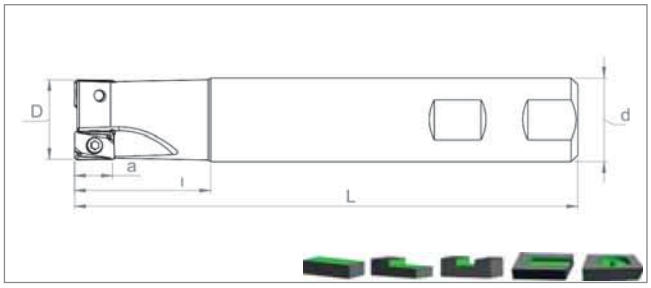

Ordering Code	Item Designation	Dimensions (mm)							Master Insert*
	ST90 ANGX 1105..		*D*	*d*	*Z*	*L*	*l*	*a*	
SM35980	ST90 AN11 D25 W25 L150 Z02-H	✓	25	25	2	150	40	10	ANGX 1105..
SM35997	ST90 AN11 D32 W32 L150 Z03-H	✓	32	32	3	150	40	10	

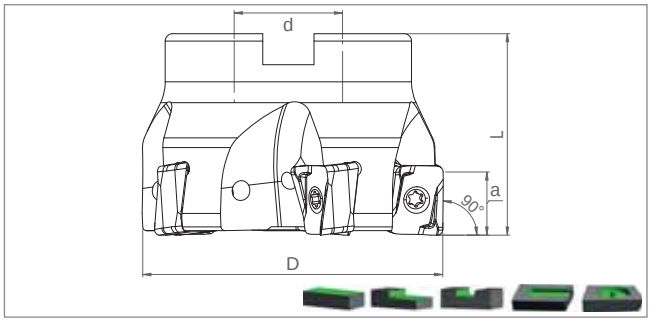

Ordering Code	Item Designation	Dimensions (mm)							Master Insert*
	TK90 ANGX 1105.. / 1506..		*D*	*Z*	*d*	*L*	*a*		
SM31364	TK90 AN11 D40 A16 Z05-H	✓	40	5	16	40	10		ANGX 1105..
SM31388	TK90 AN11 D50 A22 Z06-H	✓	50	6	22	40	10		
SM31401	TK90 AN11 D63 A22 Z07-H	✓	63	7	22	40	10		
SM31425	TK90 AN15 D50 A22 Z04-H	✓	50	4	22	40	14		ANGX 1506..
SM31449	TK90 AN15 D63 A22 Z05-H	✓	63	5	22	40	14		
SM31463	TK90 AN15 D80 A27 Z07-H	✓	80	7	27	50	14		
SM31487	TK90 AN15 D100 A32 Z09-H	✓	100	9	32	50	14		

Cooling mounting screw is optional / See Page “526” for cooling mounting screws.
İçten su vermeli montaj vidaları opsiyoneldir. / Bkz. Sayfa “526” İçten su vermeli montaj vidaları için.

Size Designation	Master Insert*	Spare Parts		
		Screw	Torx Key	Screw Torque Value
D25 - D63	ANGX 1105..	SSV M3x8-9508	STK-T08-9908	1,9 N·m
D50 - D100	ANGX 1506..	SSV M4x12x5-9529	STK-T15-9910	3,9 N·m

*Suitable Insert brand is ZCC-CT

SMOXH CUTTING TOOLS
Kalitenin Yükselen Gücü

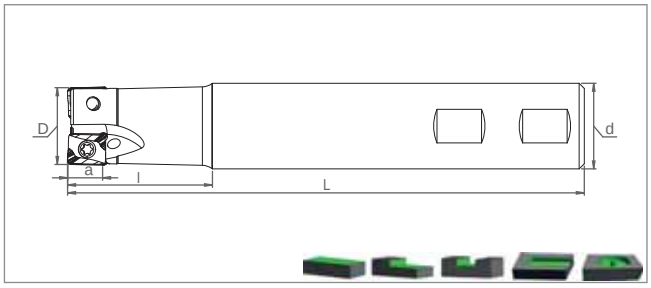

Ordering Code	Item Designation	Dimensions (mm)							Master Insert*
	ST90 LQMU 1107..		*D*	*d*	*Z*	*L*	*l*	*a*	
SM46054	ST90 LQ11 D25 W25 L150 Z02-H	✓	25	25	2	150	40	9	LQMU 1107..
SM46061	ST90 LQ11 D32 W32 L150 Z03-H	✓	32	32	3	150	40	9	

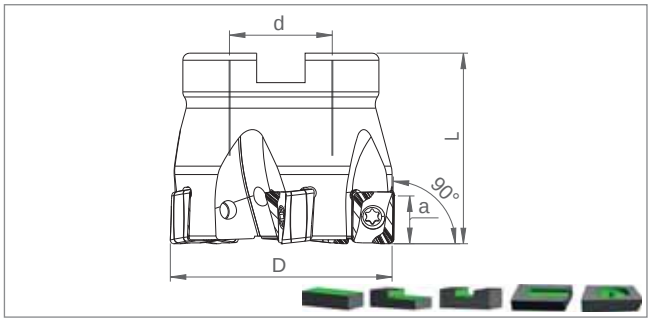

Ordering Code	Item Designation	Dimensions (mm)						Master Insert*
	TK90 LQMU 1107..		*D*	*Z*	*d*	*L*	*a*	
SM45996	TK90 LQ11 D40 A16 Z04-H	✓	40	4	16	40	9	LQMU 1107..
SM46009	TK90 LQ11 D50 A22 Z05-H	✓	50	5	22	40	9	
SM46016	TK90 LQ11 D63 A22 Z06-H	✓	63	6	22	40	9	

Cooling mounting screw is optional / See Page “526” for cooling mounting screws.
İçten su vermeli montaj vidaları opsiyoneldir. / Bkz. Sayfa “526” İçten su vermeli montaj vidaları için.

Size Designation	Master Insert*	Spare Parts		
		Screw	Torx Key	Screw Torque Value
D25 - D63	LQMU 1107..	SSV M3.5x8 SC-9513	STK-T08-9908	2,7 N·m

*Suitable Insert brand is TNGLY

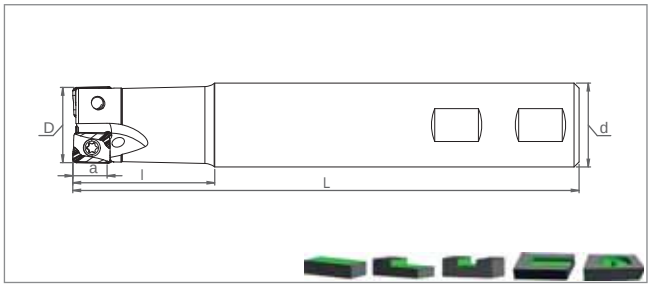

Ordering Code	Item Designation	Dimensions (mm)							Master Insert*
	ST90 LNGX 1205..		*D*	*d*	*Z*	*L*	*l*	*a*	
SM35867	ST90 LN12 D25 W25 L150 Z02	✓	25	25	2	150	40	11	LNGX 1205..
SM35874	ST90 LN12 D32 W32 L150 Z03	✓	32	32	3	150	40	11	

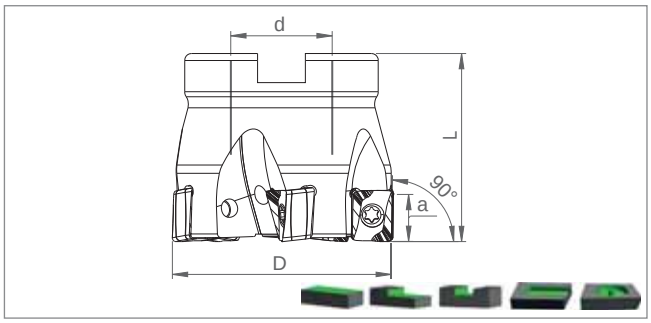

Ordering Code	Item Designation	Dimensions (mm)						Master Insert*
	TK90 LNGX 1205..		*D*	*Z*	*d*	*L*	*a*	
SM61941	TK90 LN12 D40 A16 Z04-H	✓	40	4	16	40	12	LNGX 1205..
SM31593	TK90 LN12 D50 A22 Z05-H	✓	50	5	22	40	12	
SM31616	TK90 LN12 D63 A22 Z06-H	✓	63	6	22	40	12	
SM31630	TK90 LN12 D80 A27 Z07-H	✓	80	7	27	50	12	
SM31654	TK90 LN12 D100 A32 Z09-H	✓	100	9	32	50	12	

Cooling mounting screw is optional / See Page “526” for cooling mounting screws.
İçten su vermeli montaj vidaları opsiyoneldir. / Bkz. Sayfa “526” İçten su vermeli montaj vidaları için.

Size Designation	Master Insert*	Spare Parts		
		Screw	Torx Key	Screw Torque Value
D25 - D100	LNGX 1205..	SSV M3.5x10-9511	STK-T10-9910	2,7 N·m

*Suitable Insert brand is PRMT

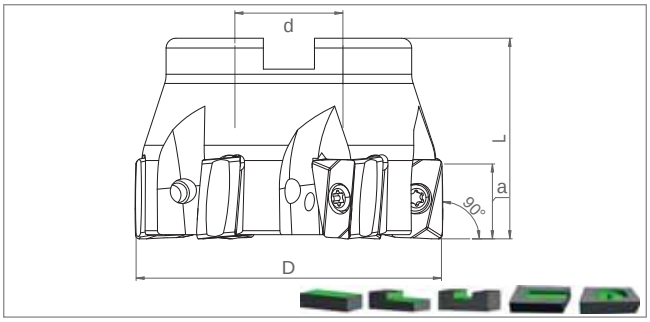

Ordering Code	Item Designation	Dimensions (mm)						Master Insert*
	TK90 AN.X 1607..		*D*	*Z*	*d*	*L*	*a*	
SM13940	TK90 AN16 D50 A22 Z04-H	✓	50	4	22	40	15	AN.X 1607..
SM13957	TK90 AN16 D63 A22 Z06-H	✓	63	6	22	40	15	
SM13964	TK90 AN16 D80 A27 Z07-H	✓	80	7	27	50	15	
SM28531	TK90 AN16 D100 A32 Z08-H	✓	100	8	32	50	15	

Cooling mounting screw is optional / See Page “526” for cooling mounting screws.
İçten su vermeli montaj vidaları opsiyoneldir. / Bkz. Sayfa “526” İçten su vermeli montaj vidaları için.

Size Designation	Master Insert*	Spare Parts		
		Screw	Torx Key	Screw Torque Value
				N·m
D50 - D100	AN.X 1607..	SSV M4x10-9514	STK-T15-9910	3,9

*Suitable Insert brand is TGTC

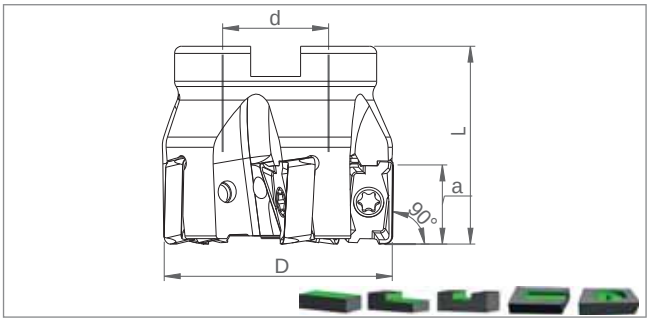

Ordering Code	Item Designation	Dimensions (mm)						Master Insert*
	TK90 LNGU 15T6..		*D*	*Z*	*d*	*L*	*a*	
SM42704	TK90 LNGU15 D40 A16 Z04-H	✓	40	4	16	40	15.5	LNGU 15T6..
SM40472	TK90 LNGU15 D50 A22 Z05-H	✓	50	5	22	40	15.5	
SM42711	TK90 LNGU15 D63 A22 Z06-H	✓	63	6	22	40	15.5	
SM42827	TK90 LNGU15 D80 A27 Z07-H	✓	80	7	27	50	15.5	
SM42834	TK90 LNGU15 D100 A32 Z08-H	✓	100	8	32	50	15.5	

Size Designation	Master Insert*	Spare Parts		
		Screw	Torx Key	Screw Torque Value
				N·m
D40 - D100	LNGU 15T6..	SSV M4x12-9515	STK-T15-9910	3,9

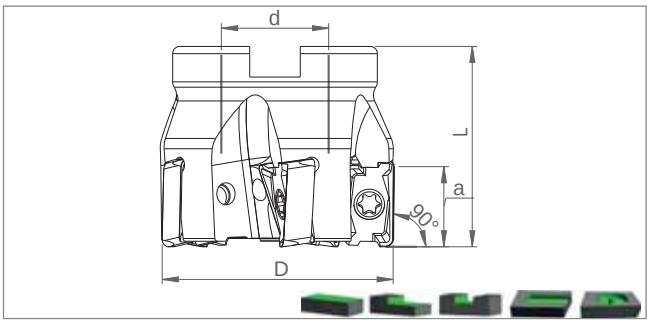

Ordering Code	Item Designation	Dimensions (mm)						Master Insert*
	TK90 XNPU 15T6..		*D*	*Z*	*d*	*L*	*a*	
SM42728	TK90 XN15 D40 A16 Z04-H	✓	40	4	16	40	14.5	XNPU 15T6..
SM40489	TK90 XN15 D50 A22 Z05-H	✓	50	5	22	40	14.5	
SM42735	TK90 XN15 D63 A22 Z06-H	✓	63	6	22	40	14.5	
SM42766	TK90 XN15 D80 A27 Z07-H	✓	80	7	27	50	14.5	
SM42773	TK90 XN15 D100 A32 Z08-H	✓	100	8	32	50	14.5	

Cooling mounting screw is optional / See Page "526" for cooling mounting screws.
İçten su vermeli montaj vidaları opsiyoneldir. / Bkz. Sayfa "526" İçten su vermeli montaj vidaları için.

Size Designation	Master Insert**	Spare Parts		
		Screw	Torx Key	Screw Torque Value
				N·m
D40 - D100	XNPU 15T6..	SSV M4x10x5-9528	STK-T15-9910	3,9

*Suitable Insert brand is KNMTL
**Suitable Insert brand is WDA

SMOXH® CUTTING TOOLS
Kalitenin Yükselen Gücü

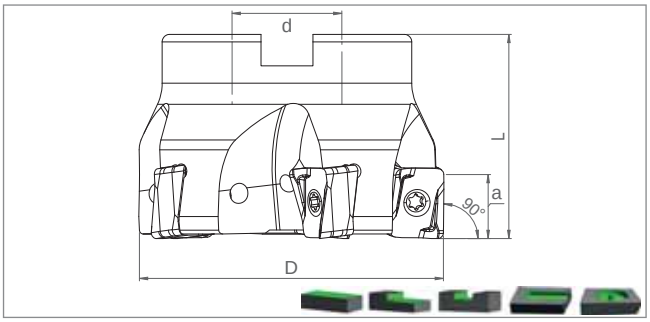

Ordering Code	Item Designation	Dimensions (mm)						Master Insert*
	TK90 LNGX 1307..		*D*	*Z*	*d*	*L*	*a*	
SM28685	TK90 LNGX13 D50 A22 Z04-H	✓	50	4	22	40	12	LNGX 1307..
SM28678	TK90 LNGX13 D63 A22 Z05-H	✓	63	5	22	40	12	
SM28661	TK90 LNGX13 D80 A27 Z06-H	✓	80	6	27	50	12	
SM31913	TK90 LNGX13 D100 A32 Z07-H	✓	100	7	32	50	12	
SM14169	TK90 LNGX13 D125 B40 Z08	-	125	8	40	63	12	

Cooling mounting screw is optional / See Page “526” for cooling mounting screws.
İçten su vermeli montaj vidaları opsiyoneldir. / Bkz. Sayfa “526” İçten su vermeli montaj vidaları için.

Size Designation	Master Insert*	Spare Parts		
		Screw	Torx Key	Screw Torque Value N·m
D50 - D125	LNGX 1307..*	SSV M3.5x12-SC-9531	STK-T10-9909	2,7

*Suitable Insert brand is WLTR

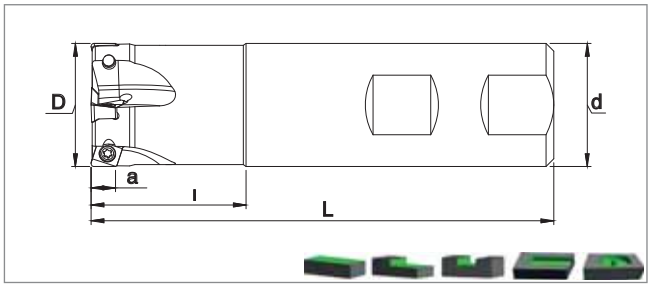

Ordering Code	Item Designation	Dimensions (mm)							Master Insert*
	ST90 4NKT 0603..		*D*	*d*	*Z*	*L*	*l*	*a*	
SM35423	ST90 4N06 D16 W16 L120 Z02-H	✓	16	16	2	120	30	6	4NKT 0603..
SM35447	ST90 4N06 D16 W16 L150 Z02	-	16	16	2	150	30	6	
SM53632	ST90 4N06 D16 W16 L150 Z02-H	✓	16	16	2	150	30	6	
SM53755	ST90 4N06 D17 W16 L150 Z02-H	✓	17	16	2	150	30	6	
SM35430	ST90 4N06 D20 W20 L120 Z03-H	✓	20	20	3	120	30	6	
SM35454	ST90 4N06 D20 W20 L150 Z03	-	20	20	3	150	40	6	
SM53649	ST90 4N06 D20 W20 L150 Z03-H	✓	20	20	3	150	40	6	
SM53779	ST90 4N06 D21 W20 L150 Z03-H	✓	21	20	3	150	30	6	
SM35461	ST90 4N06 D25 W25 L150 Z03	-	25	25	3	150	40	6	
SM53656	ST90 4N06 D25 W25 L150 Z03-H	✓	25	25	3	150	40	6	
SM53793	ST90 4N06 D26 W25 L150 Z03-H	✓	26	25	3	150	30	6	
SM35478	ST90 4N06 D32 W32 L150 Z04	-	32	32	4	150	40	6	
SM53663	ST90 4N06 D32 W32 L150 Z04-H	✓	32	32	4	150	40	6	

Size Designation	Master Insert*	Spare Parts		
		Screw	Torx Key	Screw Torque Value
				N·m
D16 - D32	4NKT 0603..**	SSV M3x6.5 LG-9509	STK-T08-9908	1,9

**Body corners should be modified for R2 and more radius inserts / R2 ve üstü radyüslü uçlarda takımın modifiye edilmesi gerekmektedir.

*Suitable Insert brand is TGTC

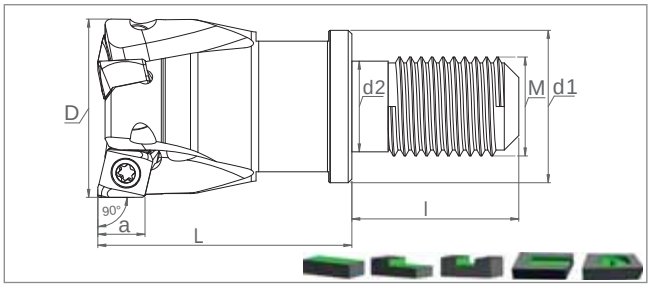

Ordering Code	Item Designation	Dimensions (mm)									Master Insert*
	MT90 4NKT 0603..		*D*	*Z*	*d1*	*d2*	*L*	*l*	*M*	*a*	
SM53748	MT90 4N06 D16 M08 L25 Z02-H	✓	16	2	15	8.5	25	17	8	6	4NKT 0603..
SM53762	MT90 4N06 D20 M10 L30 Z03-H	✓	20	3	18	10.5	30	19	10	6	
SM53786	MT90 4N06 D25 M12 L35 Z03-H	✓	25	3	21	12.5	35	23	12	6	
SM53809	MT90 4N06 D32 M16 L43 Z04-H	✓	32	4	29	17	43	23	16	6	
SM53816	MT90 4N06 D35 M16 L43 Z05-H	✓	35	5	29	17	43	23	16	6	
SM53823	MT90 4N06 D40 M16 L43 Z05-H	✓	40	5	29	17	43	23	16	6	
SM53830	MT90 4N06 D42 M16 L43 Z05-H	✓	42	5	29	17	43	23	16	6	

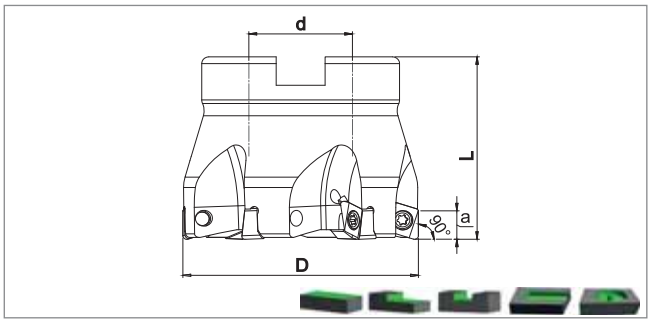

Ordering Code	Item Designation	Dimensions (mm)						Master Insert*
	TK90 4NKT 0603..		*D*	*Z*	*d*	*L*	*a*	
SM32408	TK90 4N06 D40 A16 Z05-H	✓	40	5	16	40	6	4NKT 0603..
SM32422	TK90 4N06 D50 A22 Z06-H	✓	50	6	22	40	6	
SM32446	TK90 4N06 D63 A22 Z07-H	✓	63	7	22	40	6	

Cooling mounting screw is optional / See Page "526" for cooling mounting screws.
İçten su vermeli montaj vidaları opsiyoneldir. / Bkz. Sayfa "526" İçten su vermeli montaj vidaları için.

Size Designation	Master Insert*	Spare Parts		
		Screw	Torx Key	Screw Torque Value
				N·m
D16 - D63	4NKT 0603..**	SSV M3x6.5 LG-9509	STK-T08-9908	1,9

**Body corners should be modified for R2 and more radius inserts / R2 ve üstü radyüslü uçlarda takımın modifiye edilmesi gerekmektedir.
*Suitable Insert brand is TGTC

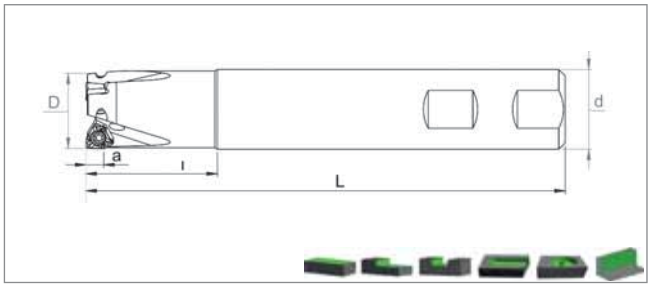

Ordering Code	Item Designation	Dimensions (mm)							Master Insert*
	ST90 XNKT 0604.. / 0805..		*D*	*d*	*Z*	*L*	*l*	*a*	
SM27282	ST90 XNKT06 D20 W20 L150 Z02-H	✓	20	20	2	150	40	5.5	XNKT 0604..
SM24540	ST90 XNKT06 D21 W20 L150 Z02-H	✓	21	20	2	150	30	5.5	
SM36666	ST90 XNKT06 D21 C20 L200 Z02	-	21	20	2	200	30	5.5	
SM36642	ST90 XNKT06 D22 W20 L150 Z02-H	✓	22	20	2	150	30	5.5	
SM24557	ST90 XNKT06 D25 W25 L150 Z03-H	✓	25	25	3	150	40	5.5	
SM27299	ST90 XNKT06 D26 W25 L150 Z03-H	✓	26	25	3	150	30	5.5	
SM36680	ST90 XNKT06 D26 C25 L200 Z03	-	26	25	3	200	30	5.5	
SM36659	ST90 XNKT06 D32 W32 L150 Z04-H	✓	32	32	4	150	40	5.5	
SM27305	ST90 XNKT06 D33 W32 L150 Z04-H	✓	33	32	4	150	30	5.5	
SM36703	ST90 XNKT06 D33 C32 L200 Z04	-	33	32	4	200	30	5.5	
SM39247	ST90 XNKT08 D30 W25 L150 Z02	-	30	25	2	150	40	8	XNKT 0805..
SM39254	ST90 XNKT08 D32 W32 L150 Z02	-	32	32	2	150	40	8	
SM39261	ST90 XNKT08 D35 W32 L150 Z03	-	35	32	3	150	30	8	
SM39278	ST90 XNKT08 D40 W32 L150 Z04	-	40	32	4	150	30	8	

Size Designation	Master Insert*	Spare Parts		
		Screw	Torx Key	Screw Torque Value
D20 - D26	XNKT 0604..	SSV M3x6-9507	STK-T08-9908	1,9
D32 - D33		SSV M3x8-9508		
D30 - D40	XNKT 0805..	SSV M4x9x5-9528	STK-T15-9910	3,9

*Suitable Insert brand is KRLY

SMOXH CUTTING TOOLS
Kalitenin Yükselen Gücü

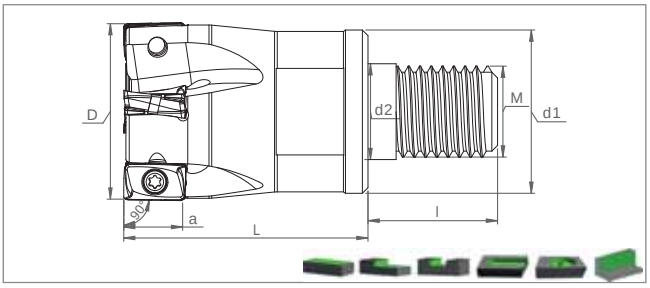

Ordering Code	Item Designation		Dimensions (mm)								Master Insert*
	MT90 XNKT 0604.. / 0805..		*D*	*Z*	*d1*	*d2*	*L*	*l*	*M*	*a*	
SM40458	MT90 XNKT06 D20 M10 L30 Z02-H	✓	20	2	18	10.5	30	19	10	5.5	XNKT 0604..
SM40427	MT90 XNKT06 D25 M12 L35 Z03-H	✓	25	3	21	12.5	35	23	12	5.5	
SM40434	MT90 XNKT06 D32 M16 L43 Z04-H	✓	32	4	29	17	43	23	16	5.5	
SM40465	MT90 XNKT06 D40 M16 L43 Z05-H	✓	40	5	29	17	43	23	16	5.5	
SM40441	MT90 XNKT06 D42 M16 L43 Z05-H	✓	42	5	29	17	43	23	16	5.5	
SM43497	MT90 XNKT08 D30 M16 L43 Z02-H	✓	30	2	29	17	43	23	16	8	XNKT 08..
SM43503	MT90 XNKT08 D32 M16 L43 Z02-H	✓	32	2	29	17	43	23	16	8	
SM43510	MT90 XNKT08 D40 M16 L43 Z04-H	✓	40	4	29	17	43	23	16	8	

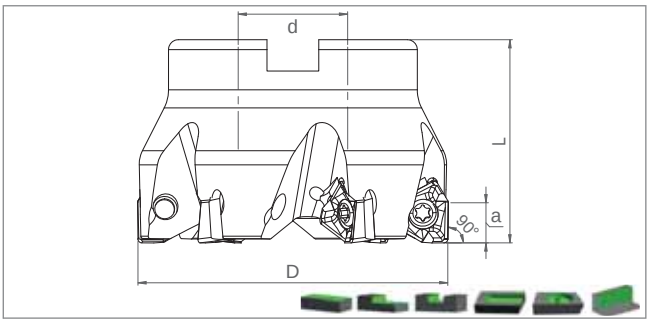

Ordering Code	Item Designation		Dimensions (mm)					Master Insert*
	TK90 XNKT 0805..		*D*	*Z*	*d*	*L*	*a*	
SM27961	TK90 XNKT08 D40 A16 Z04-H	✓	40	4	16	40	8	XNKT 08..
SM24472	TK90 XNKT08 D50 A22 Z05-H	✓	50	5	22	40	8	
SM24489	TK90 XNKT08 D63 A22 Z06-H	✓	63	6	22	40	8	
SM24496	TK90 XNKT08 D80 A27 Z08-H	✓	80	8	27	50	8	
SM27930	TK90 XNKT08 D100 A32 Z08-H	✓	100	8	32	50	8	
SM38929	TK90 XNKT08 D100 A32 Z09-H	✓	100	9	32	50	8	
SM38516	TK90 XNKT08 D125 B40 Z10	-	125	10	40	63	8	

Cooling mounting screw is optional / See Page “526” for cooling mounting screws.
İçten su vermeli montaj vidaları opsiyoneldir. / Bkz. Sayfa “526” İçten su vermeli montaj vidaları için.

Size Designation	Master Insert*	Spare Parts		
		Screw	Torx Key	Screw Torque Value
				N·m
D20 - D25	XNKT 0604..	SSV M3x6-9507	STK-T08-9908	1,9
D32 - D40		SSV M3x8-9508		
D30 - D125	XNKT 0805..	SSV M4x9x5-9528	STK-T15-9910	3,9

*Suitable Insert brand is KRLY

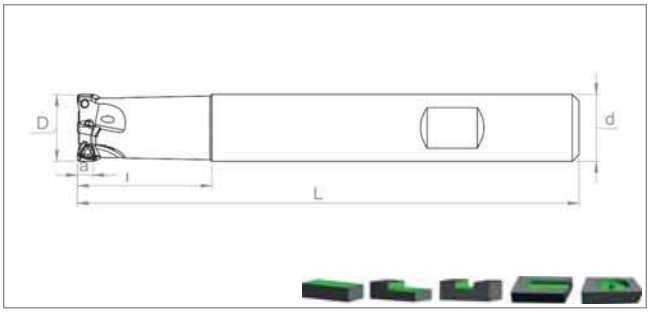

Ordering Code	Item Designation	Dimensions (mm)							Master Insert*
	ST90 3PKT 0402.. / 0603.. / 1004..		*D*	*d*	*Z*	*L*	*l*	*a*	
SM71353	**ST90 3PK04 D10 C10 L100 Z02-H**	✓	**10**	**10**	**2**	**100**	**20**	**3.5**	3PKT 0402..
SM71360	**ST90 3PK04 D12 C12 L100 Z02-H**	✓	**12**	**12**	**2**	**100**	**20**	**3.5**	
SM71377	**ST90 3PK04 D16 C16 L100 Z03-H**	✓	**16**	**16**	**3**	**100**	**20**	**3.5**	
SM36802	ST90 3PK06 D12 W12 L120 Z01-H	✓	12	12	1	120	40	4.7	3PKT 0603..
SM36826	ST90 3PK06 D16 W16 L150 Z03-H	✓	16	16	3	150	40	4.7	
SM36840	ST90 3PK06 D20 W20 L150 Z04-H	✓	20	20	4	150	40	4.7	
SM36864	ST90 3PK10 D16 W16 L150 Z01-H	✓	16	16	1	150	40	7	3PKT 1004..
SM00845	ST90 3PK10 D17 W16 L150 Z01-H	✓	17	16	1	150	30	7	
SM36871	ST90 3PK10 D20 W20 L150 Z02-H	✓	20	20	2	150	40	7	
SM00852	ST90 3PK10 D21 W20 L150 Z02-H	✓	21	20	2	150	30	7	
SM00883	ST90 3PK10 D21 C20 L200 Z02	-	21	20	2	200	30	7	
SM01699	ST90 3PK10 D22 W20 L120 Z02-H	✓	22	20	2	120	30	7	
SM53946	ST90 3PK10 D22 W20 L150 Z02-H	✓	22	20	2	150	30	7	
SM36888	ST90 3PK10 D25 W25 L150 Z03-H	✓	25	25	3	150	40	7	
SM00869	ST90 3PK10 D26 W25 L150 Z03-H	✓	26	25	3	150	30	7	
SM00890	ST90 3PK10 D26 C25 L200 Z03	-	26	25	3	200	30	7	
SM36895	ST90 3PK10 D32 W32 L150 Z04-H	✓	32	32	4	150	40	7	

Size Designation	Master Insert*	Spare Parts		
		Screw	Torx Key	Screw Torque Value
				N·m
D10 - D12	3PKT 0402..	SSV M1.8x4-9501	STK-T06-9906	0,4
D12 - D20	3PKT 0603..	SSV M2x5-9502	STK-T06-9906	0,4
D16 - D32	3PKT 1004..	SSV M3x6-9507	STK-T08-9908	1,9

**Body corners should be modified for R2 and more radius inserts / R2 ve üstü radyüslü uçlarda takımın modifiye edilmesi gerekmektedir.

*Suitable Insert brand is TGTC

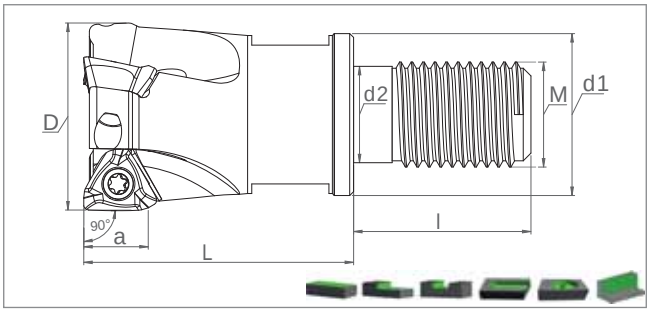

Ordering Code	Item Designation	Dimensions (mm)									Master Insert*
	MT90 3PKT 0603.. / 1004..		*D*	*Z*	*d1*	*d2*	*L*	*l*	*M*	*a*	
SM53953	MT90 3PK10 D20 M10 L30 Z02-H	✓	20	2	18	10.5	30	19	10	7	3PKT 1004..
SM01705	MT90 3PK10 D25 M12 L35 Z03-H	✓	25	3	21	12.5	35	23	12	7	
SM01378	MT90 3PK10 D32 M16 L43 Z04-H	✓	32	4	29	17	43	23	16	7	
SM61293	**MT90 3PK10 D32 M16 L43 Z05-H**	✓	**32**	**5**	**29**	**17**	**43**	**23**	**16**	**7**	
SM53960	MT90 3PK10 D35 M16 L43 Z05-H	✓	35	5	29	17	43	23	16	7	
SM53977	MT90 3PK10 D40 M16 L43 Z05-H	✓	40	5	29	17	43	23	16	7	

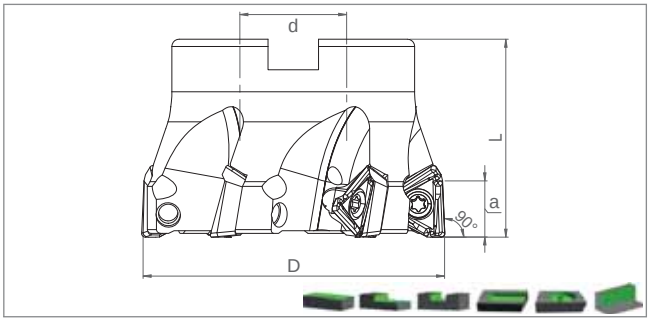

Ordering Code	Item Designation	Dimensions (mm)						Master Insert*
	TK90 3PKT 1004.. / 1505..		*D*	*Z*	*d*	*L*	*a*	
SM48997	TK90 3PKT10 D40 A16 Z05-H	✓	40	5	16	40	7	3PKT 1004..
SM49000	TK90 3PKT10 D50 A22 Z06-H	✓	50	6	22	40	7	
SM49017	TK90 3PKT10 D63 A22 Z07-H	✓	63	7	22	40	7	
SM00593	TK90 3PKT15 D40 A16 Z04-H	✓	40	4	16	40	11	3PKT 1505..
SM32163	TK90 3PKT15 D50 A22 Z05-H	✓	50	5	22	40	11	
SM32187	TK90 3PKT15 D63 A22 Z06-H	✓	63	6	22	40	11	
SM32200	TK90 3PKT15 D80 A27 Z08-H	✓	80	8	27	50	11	
SM40496	TK90 3PKT15 D100 A32 Z09-H	✓	100	9	32	50	11	
SM40502	TK90 3PKT15 D125 B40 Z12	-	125	12	40	63	11	

Cooling mounting screw is optional / See Page "526" for cooling mounting screws.
İçten su vermeli montaj vidaları opsiyoneldir. / Bkz. Sayfa "526" İçten su vermeli montaj vidaları için.

Size Designation	Master Insert*	Spare Parts		
		Screw	Torx Key	Screw Torque Value
D20 - D63	3PKT 1004..	SSV M3x6-9507	STK-T08-9908	1,9
D40 - D125	3PKT 1505..	SSV M4x10-9514	STK-T15-9910	3,9

**Body corners should be modified for R2 and more radius inserts / R2 ve üstü radyüslü uçlarda takımın modifiye edilmesi gerekmektedir.
*Suitable Insert brand is TGTC

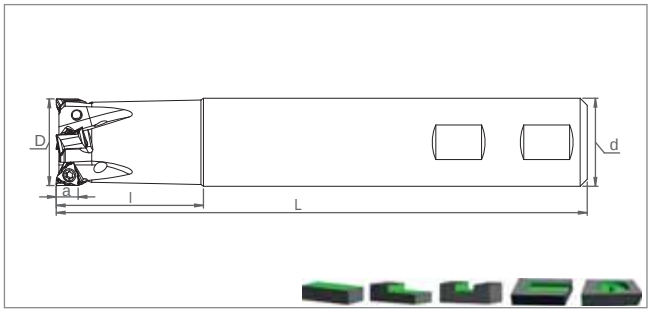

Ordering Code	Item Designation	Dimensions (mm)							Master Insert*
	ST90 TN.X 1005..		*D*	*d*	*Z*	*L*	*l*	*a*	
SM47181	ST90 TN1005 D20 W20 L150 Z02-H	✓	20	20	2	150	40	8	TN.X 1005..
SM47198	ST90 TN1005 D25 W25 L150 Z03-H	✓	25	25	3	150	40	8	
SM47204	ST90 TN1005 D32 W32 L150 Z04-H	✓	32	32	4	150	40	8	

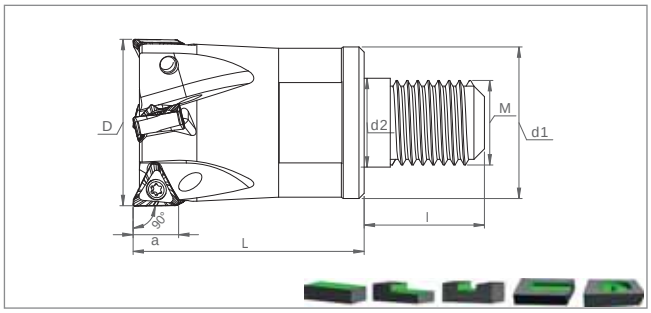

Ordering Code	Item Designation	Dimensions (mm)									Master Insert*
	MT90 TN.X 1005..		*D*	*Z*	*d1*	*d2*	*L*	*l*	*M*	*a*	
SM47211	MT90 TN1005 D20 M10 L30 Z02-H	✓	20	2	18	10.5	30	19	10	8	TN.X 1005..
SM47228	MT90 TN1005 D25 M12 L35 Z03-H	✓	25	3	21	12.5	35	23	12	8	
SM47235	MT90 TN1005 D32 M16 L43 Z04-H	✓	32	4	29	17	43	23	16	8	

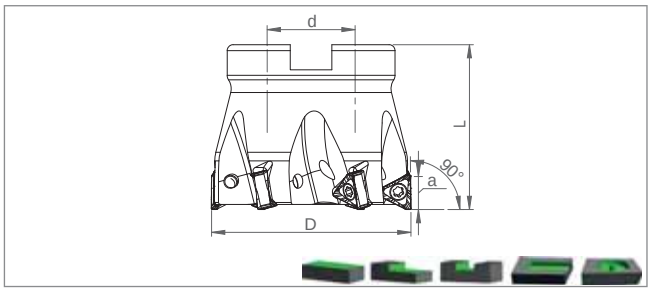

Ordering Code	Item Designation	Dimensions (mm)						Master Insert*
	TK90 TN.X 1005..		*D*	*Z*	*d*	*L*	*a*	
SM47150	TK90 TN1005 D40 A16 Z05-H	✓	40	5	16	40	8	TN.X 1005..
SM47167	TK90 TN1005 D50 A22 Z06-H	✓	50	6	22	40	8	
SM47174	TK90 TN1005 D63 A22 Z07-H	✓	63	7	22	40	8	

Size Designation	Master Insert*	Spare Parts		
		Screw	Torx Key	Screw Torque Value
				N·m
D20 - D63	TN.X 1005..	SSV M3x6.5 LG-9509	STK-T08-9908	1,9

**Body corners should be modified for R2 and more radius inserts / R2 ve üstü radyüslü uçlarda takımın modifiye edilmesi gerekmektedir.

*Suitable Insert brand is ISC

SMOXH CUTTING TOOLS
Kalitenin Yükselen Gücü

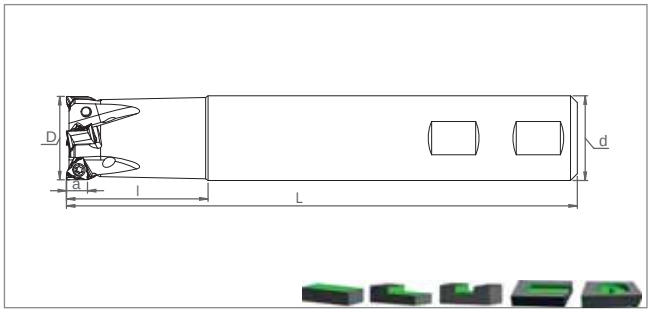

Ordering Code	Item Designation	Dimensions (mm)							Master Insert*
	ST90 TNGX 1004..		*D*	*d*	*Z*	*L*	*l*	*a*	
SM46733	ST90 TNGX10 D20 W20 L150 Z03-H	✓	20	20	3	150	40	5	TNGX 1004..
SM46740	ST90 TNGX10 D25 W25 L150 Z04-H	✓	25	25	4	150	40	5	
SM46757	ST90 TNGX10 D32 W32 L150 Z04-H	✓	32	32	4	150	40	5	

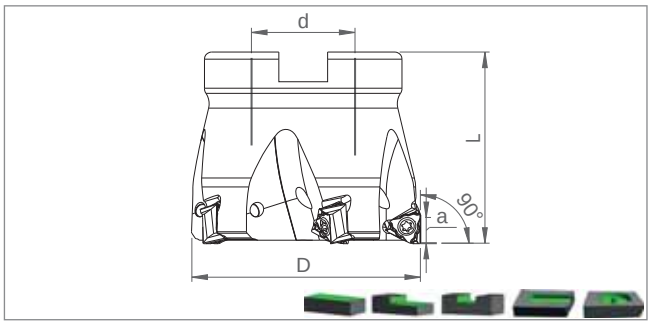

Ordering Code	Item Designation	Dimensions (mm)						Master Insert*
	TK90 TNGX 1004..		*D*	*Z*	*d*	*L*	*a*	
SM46160	TK90 TNGX10 D40 A16 Z04-H	✓	40	4	16	40	5	TNGX 1004..
SM46177	TK90 TNGX10 D50 A22 Z05-H	✓	50	5	22	40	5	
SM46184	TK90 TNGX10 D63 A22 Z06-H	✓	63	6	22	40	5	

Cooling mounting screw is optional / See Page “526” for cooling mounting screws.
İçten su vermeli montaj vidaları opsiyoneldir. / Bkz. Sayfa “526” İçten su vermeli montaj vidaları için.

Size Designation	Master Insert*	Spare Parts		
		Screw	Torx Key	Screw Torque Value
D20	TNGX 1004..	SSV M2.5x6-9505	STK-T08-9908	1,0
D25 - D63		SSV M2.5x7-9506		

*Suitable Insert brand is PRMT

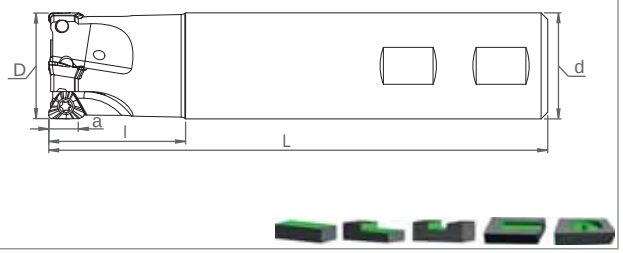

Ordering Code	Item Designation	Dimensions (mm)							Master Insert*
	ST90 TP.. 1003..		*D*	*d*	*Z*	*L*	*l*	*a*	
SM47518	ST90 TP10 D25 W25 L150 Z02-H	✓	25	25	2	150	40	8	TP.. 1003..
SM47525	ST90 TP10 D28 W25 L150 Z03-H	✓	28	25	3	150	40	8	
SM47532	ST90 TP10 D32 W32 L150 Z04-H	✓	32	32	4	150	40	8	

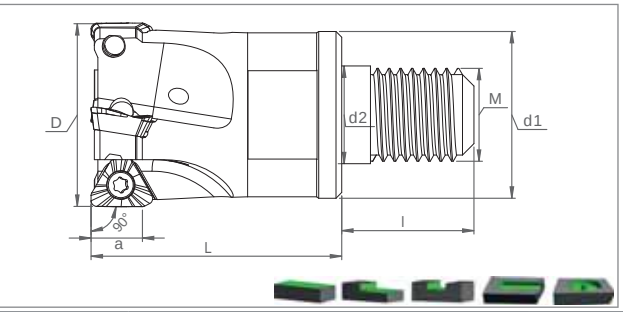

Ordering Code	Item Designation	Dimensions (mm)									Master Insert*
	MT90 TP.. 1003..		*D*	*Z*	*d1*	*d2*	*L*	*l*	*M*	*a*	
SM47600	MT90 TP10 D25 M12 L35 Z02-H	✓	25	2	21	12.5	35	23	12	8	TP.. 1003..
SM47617	MT90 TP10 D32 M16 L43 Z04-H	✓	32	4	29	17	43	23	16	8	

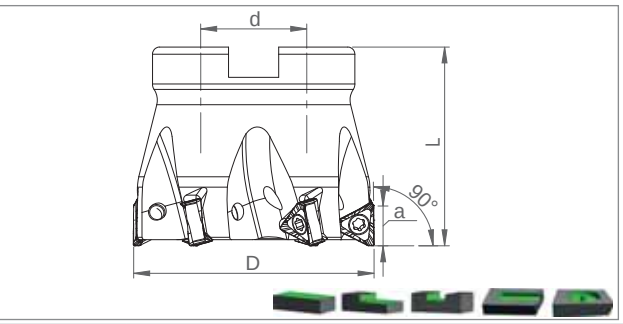

Ordering Code	Item Designation	Dimensions (mm)						Master Insert*
	TK90 TP.. 1003..		*D*	*Z*	*d*	*L*	*a*	
SM46634	TK90 TP10 D40 A16 Z04-H	✓	40	4	16	40	8	TP.. 1003..
SM46641	TK90 TP10 D50 A22 Z05-H	✓	50	5	22	40	8	
SM46658	TK90 TP10 D63 A22 Z06-H	✓	63	6	22	40	8	
SM50020	TK90 TP10 D80 A27 Z07-H	✓	80	7	27	50	8	

Cooling mounting screw is optional / See Page "526" for cooling mounting screws.
İçten su vermeli montaj vidaları opsiyoneldir. / Bkz. Sayfa "526" İçten su vermeli montaj vidaları için.

Size Designation	Master Insert*	Spare Parts		
		Screw	Torx Key	Screw Torque Value
				N·m
D25 - D32	TP.. 1003..	SSV M3.5x8 SC-9513	STK-T10-9909	2,7
D40 - D80	TP.. 1003..	SSV M3x8 SC-9513	STK-T10-9909	1,9

*Suitable Insert brand is ISC

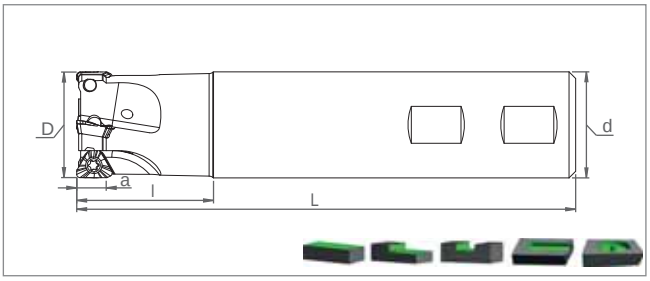

Ordering Code	Item Designation	Dimensions (mm)							Master Insert*
	ST90 TPKT 1104..		*D*	*d*	*Z*	*L*	*l*	*a*	
SM70325	ST90 TPKT1104 D20 W20 L150 Z02-H	✓	20	20	2	150	40	7	TPKT 1104..
SM70332	ST90 TPKT1104 D22 W20 L150 Z02-H	✓	22	20	2	150	30	7	
SM70349	ST90 TPKT1104 D22 C20 L200 Z02	✓	22	20	2	200	30	7	
SM70356	ST90 TPKT1104 D25 W25 L150 Z03-H	✓	25	25	3	150	40	7	
SM70363	ST90 TPKT1104 D26 W25 L150 Z03-H	✓	26	25	3	150	30	7	
SM70370	ST90 TPKT1104 D26 C25 L200 Z03	✓	26	25	3	200	30	7	
SM70387	ST90 TPKT1605 D32 W32 L150 Z02-H	✓	32	32	2	150	40	11	TPKT 1605..
SM70394	ST90 TPKT1605 D33 W32 L150 Z02-H	✓	33	32	2	150	30	11	
SM70400	ST90 TPKT1605 D40 W32 L150 Z03-H	✓	40	32	3	150	30	11	

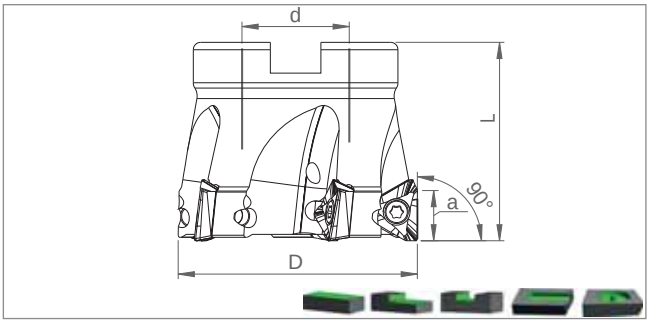

Ordering Code	Item Designation	Dimensions (mm)						Master Insert*
	TK90 TPKT 1605..		*D*	*Z*	*d*	*L*	*a*	
SM64706	TK90 TPKT1605 D50 A22 Z04-H	✓	50	4	22	40	11	TPKT 1605..
SM64713	TK90 TPKT1605 D63 A22 Z05-H	✓	63	5	22	40	11	
SM64720	TK90 TPKT1605 D80 A27 Z06-H	✓	80	7	27	50	11	
SM64737	TK90 TPKT1605 D100 A32 Z08-H	✓	100	8	32	50	11	
SM64744	TK90 TPKT1605 D125 B40 Z10	✓	125	10	40	50	11	

Size Designation	Master Insert*	Spare Parts		
		Screw	Torx Key	Screw Torque Value
				N·m
D20 - D22	TPKT 1104..	SSV M2.5x5-9504	STK-T08-9908	1,0
D25 - D26		SSV M2.5x7-9506		1,9
D32 - D125	TPKT 1605..	SSV M4.5x11-9518	STK-T20-9911	4,7

*Suitable Insert brand is YG-1

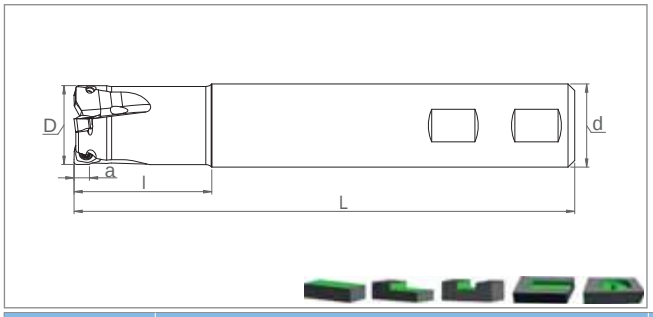

Ordering Code	Item Designation	Dimensions (mm)							Master Insert*
	ST90 6NGU 0604..		*D*	*d*	*Z*	*L*	*l*	*a*	
SM58620	ST90 6N06 D25 W25 L150 Z02-H	✓	25	25	2	150	40	6.2	6NGU 0604..
SM58637	ST90 6N06 D32 W32 L150 Z03-H	✓	32	32	3	150	40	6.2	

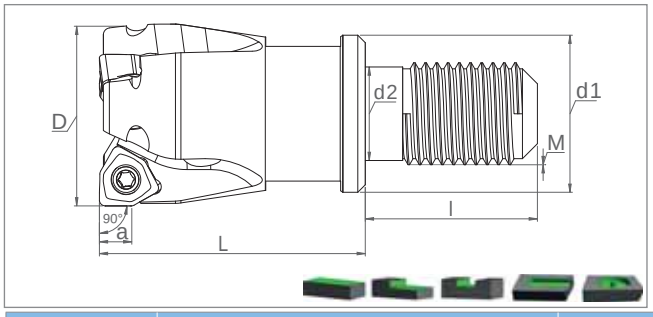

Ordering Code	Item Designation	Dimensions (mm)									Master Insert*
	MT90 6NGU 0604..		*D*	*Z*	*d1*	*d2*	*L*	*l*	*M*	*a*	
SM58644	MT90 6N06 D25 M12 L35 Z02-H	✓	25	2	21	12.5	35	23	12	6.2	6NGU 0604..
SM58651	MT90 6N06 D32 M16 L43 Z03-H	✓	32	3	29	17	43	23	16	6.2	

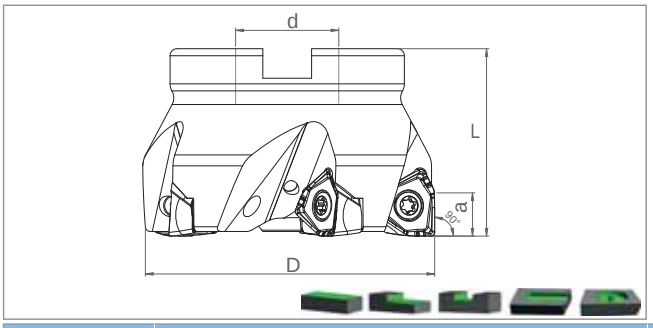

Ordering Code	Item Designation	Dimensions (mm)						Master Insert*
	TK90 6NGU 0905..		*D*	*Z*	*d*	*L*	*a*	
SM56107	TK90 6N09 D50 A22 Z04-H	✓	50	4	22	40	9.2	6NGU 0905..
SM56114	TK90 6N09 D63 A22 Z05-H	✓	63	5	22	40	9.2	
SM56121	TK90 6N09 D80 A27 Z07-H	✓	80	7	27	50	9.2	

Cooling mounting screw is optional / See Page "526" for cooling mounting screws.
İçten su vermeli montaj vidaları opsiyoneldir. / Bkz. Sayfa "526" İçten su vermeli montaj vidaları için.

Size Designation	Master Insert*	Spare Parts		
		Screw	Torx Key	Screw Torque Value
				N·m
D25 - D32	6NGU 0604..	SSV M3x8 LG-9508	STK-T08-9908	1,9
D50 - D80	6NGU 0905..	SSV M4x10-9514	STK-T15-9910	3,9

*Suitable Insert brand is TGTC

SMOXH® CUTTING TOOLS
Kalitenin Yükselen Gücü

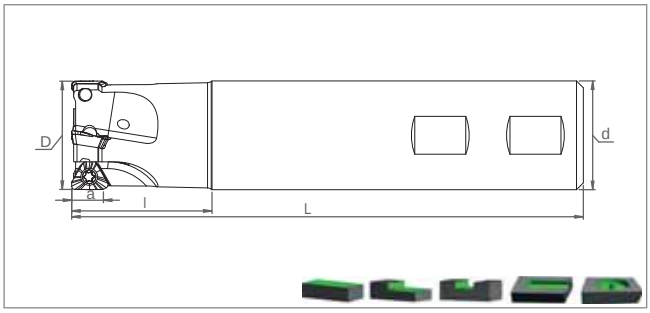

Ordering Code	Item Designation	Dimensions (mm)							Master Insert*
	ST90 TOMT 0603.. / 1004..		*D*	*d*	*Z*	*L*	*l*	*a*	
SM46078	ST90 TO06 D16 W16 L150 Z02-H	✓	16	16	2	150	40	6	TOMT 0603..
SM46085	ST90 TO06 D20 W20 L150 Z03-H	✓	20	20	3	150	40	6	
SM46092	ST90 TO06 D25 W25 L150 Z04-H	✓	25	25	4	150	40	6	
SM46108	ST90 TO10 D25 W25 L150 Z02-H	✓	25	25	2	150	40	10	TOMT 1004..
SM46115	ST90 TO10 D32 W32 L150 Z03-H	✓	32	32	3	150	40	10	

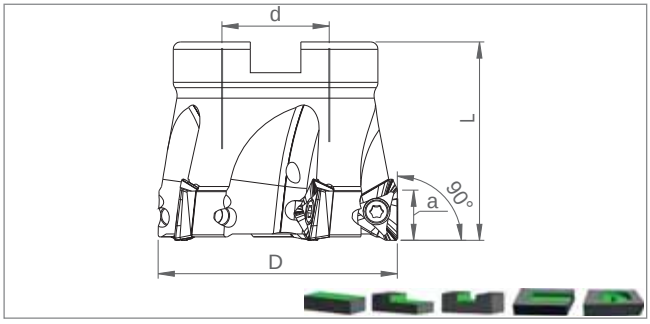

Ordering Code	Item Designation	Dimensions (mm)						Master Insert*
	TK90 TOMT 1004.. / 1506..		*D*	*Z*	*d*	*L*	*a*	
SM46023	TK90 TO10 D40 A16 Z04-H	✓	40	4	16	40	10	TOMT 1004..
SM46030	TK90 TO10 D50 A22 Z05-H	✓	50	5	22	40	10	
SM46047	TK90 TO10 D63 A22 Z06-H	✓	63	6	22	40	10	
SM52949	TK90 TO15 D50 A22 Z04-H	✓	50	4	22	40	15	TOMT 1506..
SM52956	TK90 TO15 D63 A22 Z05-H	✓	63	5	22	40	15	
SM52963	TK90 TO15 D80 A27 Z06-H	✓	80	6	27	50	15	
SM52970	TK90 TO15 D100 A32 Z07-H	✓	100	7	32	50	15	
SM52987	TK90 TO15 D125 B40 Z08	-	125	8	40	63	15	

Size Designation	Master Insert*	Spare Parts		
		Screw	Torx Key	Screw Torque Value
				N·m
D16 - D25	TOMT 0603..	SSV M2.5x5-9504	STK-T08-9908	1,0
D25 - D63	TOMT 1004..	SSV M3.5x8-SC-9513	STK-T10-9909	2,7
D50 - D125	TOMT 1506..**	SSV M5x13-9519	STK-T20-9911	5,5

Cooling mounting screw is optional / See Page "526" for cooling mounting screws.
İçten su vermeli montaj vidaları opsiyoneldir. / Bkz. Sayfa "526" İçten su vermeli montaj vidaları için.

**Body corners should be modified for R2 and more radius inserts / R2 ve üstü radyüslü uçlarda takımın modifiye edilmesi gerekmektedir. ■

*Suitable Insert brand is TNGLY

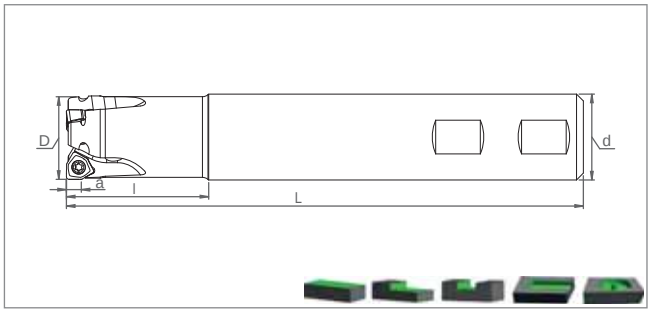

Ordering Code	Item Designation	Dimensions (mm)							Master Insert*
	ST90 6NKU 0403..		*D*	*d*	*Z*	*L*	*l*	*a*	
SM47488	ST90 6N04 D20 W20 L150 Z02-H	✓	20	20	2	150	40	4.1	6NKU 0403..
SM47495	ST90 6N04 D25 W25 L150 Z03-H	✓	25	25	3	150	40	4.1	
SM47501	ST90 6N04 D32 W32 L150 Z04-H	✓	32	32	4	150	40	4.1	

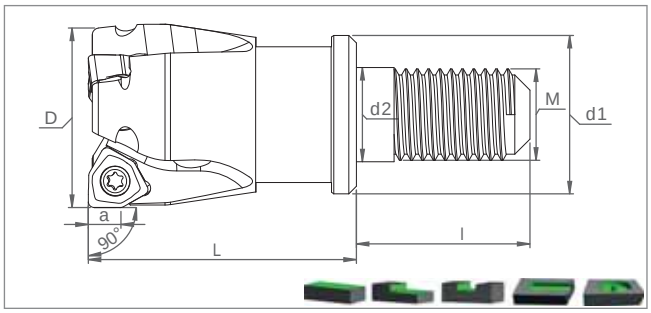

Ordering Code	Item Designation	Dimensions (mm)									Master Insert*
	MT90 6NKU 0403..		*D*	*Z*	*d1*	*d2*	*L*	*l*	*M*	*a*	
SM47570	MT90 6N04 D20 M10 L30 Z02-H	✓	20	2	18	10.5	30	19	10	4.1	6NKU 0403..
SM47587	MT90 6N04 D25 M12 L35 Z03-H	✓	25	3	21	12.5	35	23	12	4.1	
SM47594	MT90 6N04 D32 M16 L43 Z04-H	✓	32	4	29	17	43	23	16	4.1	

Size Designation	Master Insert*	Spare Parts		
		Screw	Torx Key	Screw Torque Value
D20	6NKU 0403..	SSV M2.5x6-9505	STK-T08-9908	1,0
D25 - D32		SSV M2.5x7-9506		

*Suitable Insert brand is TGTC

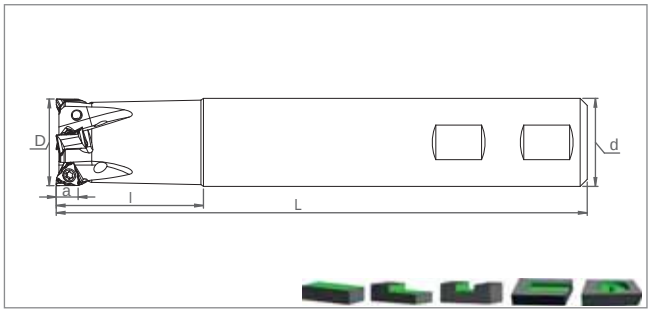

Ordering Code	Item Designation	Dimensions (mm)							Master Insert*
	ST90 TNMU 0703....		*D*	*d*	*Z*	*L*	*l*	*a*	
SM58019	ST90 TN07 D16 W16 L150 Z02-H	✓	16	16	2	150	40	6.5	TNMU 0703..
SM58026	ST90 TN07 D18 W16 L150 Z02-H	✓	18	16	2	150	30	6.5	
SM58033	ST90 TN07 D20 W20 L150 Z02-H	✓	20	20	2	150	40	6.5	
SM58040	ST90 TN07 D22 W20 L150 Z02-H	✓	22	20	2	150	30	6.5	
SM58057	ST90 TN07 D25 W25 L150 Z03-H	✓	25	25	3	150	40	6.5	
SM58064	ST90 TN07 D26 W25 L150 Z04-H	✓	26	25	4	150	30	6.5	
SM58071	ST90 TN07 D32 W32 L150 Z04-H	✓	32	32	4	150	40	6.5	
SM58088	ST90 TN07 D33 W32 L150 Z05-H	✓	33	32	5	150	30	6.5	

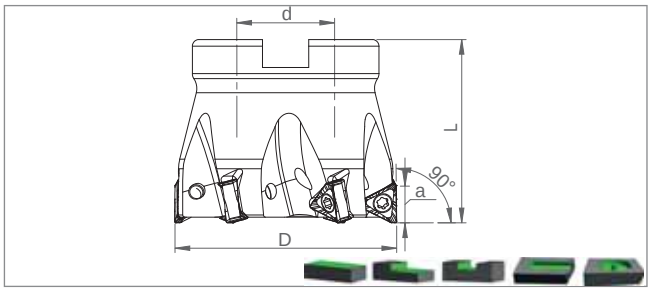

Ordering Code	Item Designation	Dimensions (mm)						Master Insert*
	TK90 TNMU 0703....		*D*	*Z*	*d*	*L*	*a*	
SM57982	TK90 TN07 D40 A16 Z06-H	✓	40	6	16	40	6.5	TNMU 0703..
SM57999	TK90 TN07 D50 A22 Z08-H	✓	50	8	22	40	6.5	
SM58002	TK90 TN07 D63 A22 Z09-H	✓	63	9	22	40	6.5	

Cooling mounting screw is optional / See Page "526" for cooling mounting screws.
İçten su vermeli montaj vidaları opsiyoneldir. / Bkz. Sayfa "526" İçten su vermeli montaj vidaları için.

Size Designation	Master Insert*	Spare Parts		
		Screw	Torx Key	Screw Torque Value
D16 - D63	TNMU 0703..	SSV M2.2x5-9503	STK-T06-9906	0,65 N·m

**Body corners should be modified for R2 and more radius inserts / R2 ve üstü radyüslü uçlarda takımın modifiye edilmesi gerekmektedir.
*Suitable Insert brand is TNGLY

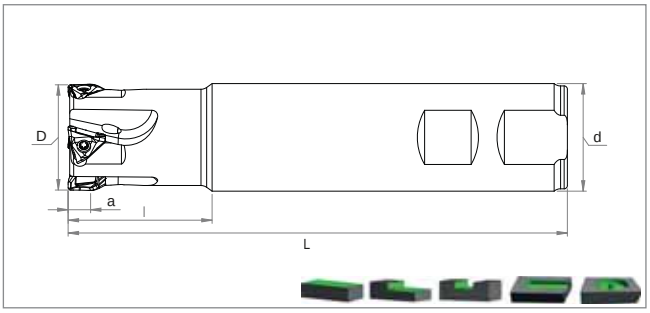

Ordering Code	Item Designation	Dimensions (mm)							Master Insert*
	ST90 TOMT 0605..		*D*	*d*	*Z*	*L*	*l*	*a*	
SM69954	ST90 TOMT06 D20 W20 L120 Z02-H	✓	20	20	2	120	30	6	TOMT 0605..
SM69961	ST90 TOMT06 D22 W20 L120 Z02-H	✓	22	20	2	120	30	6	
SM69978	ST90 TOMT06 D25 W25 L120 Z03-H	✓	25	25	3	120	30	6	
SM69985	ST90 TOMT06 D32 W32 L120 Z04-H	✓	32	32	4	120	30	6	

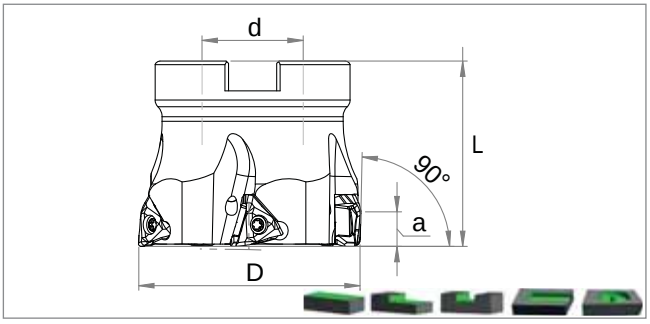

Ordering Code	Item Designation	Dimensions (mm)						Master Insert*
	TK90 TOMT 0605..		*D*	*Z*	*d*	*L*	*a*	
SM69992	TK90 TOMT06 D40 A16 Z05-H	✓	40	5	16	40	6	TOMT 0605..
SM70004	TK90 TOMT06 D50 A22 Z05-H	✓	50	5	22	40	6	
SM70011	TK90 TOMT06 D63 A22 Z06-H	✓	63	6	22	40	6	

Size Designation	Master Insert*	Spare Parts		
		Screw	Torx Key	Screw Torque Value
				N·m
D35 - D160	TOMT 0605..	SSV M3x8-9508	STK-T08-9908	1,0

*Suitable Insert brand is KYCR

SMOXH CUTTING TOOLS
Kalitenin Yükselen Gücü

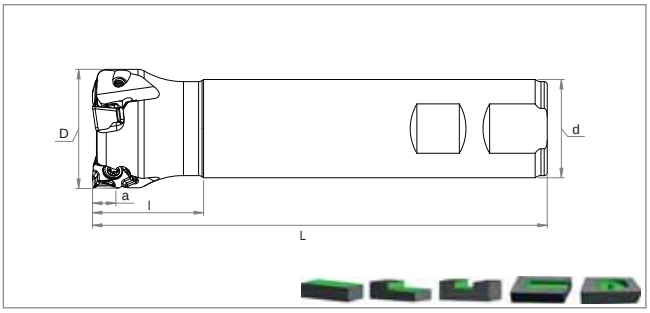

Ordering Code	Item Designation	Dimensions (mm)							Master Insert*
	ST90 WNEX 0806..		*D*	*d*	*Z*	*L*	*l*	*a*	
SM70417	ST90 WNEX0806 D35 W32 L150 Z02-H	✓	35	32	2	150	30	7	WNEX 0806..
SM70424	ST90 WNEX0806 D40 W32 L150 Z03-H	✓	40	32	3	150	35	7	

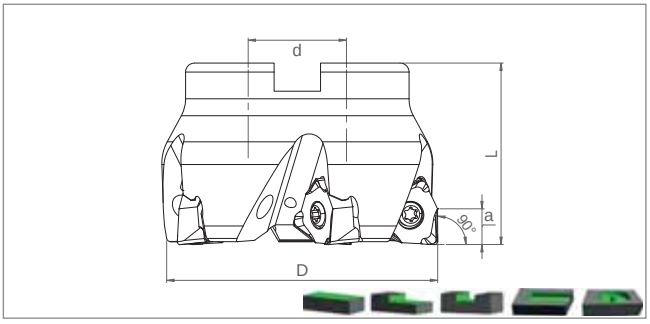

Ordering Code	Item Designation	Dimensions (mm)						Master Insert*
	TK90 WNEX 0806...		*D*	*Z*	*d*	*L*	*a*	
SM64645	TK90 WNEX0806 D50 A22 Z04-H	✓	50	4	22	40	7	WNEX 0806..
SM64652	TK90 WNEX0806 D63 A22 Z05-H	✓	63	5	22	40	7	
SM64669	TK90 WNEX0806 D80 A27 Z07-H	✓	80	7	27	50	7	
SM64676	TK90 WNEX0806 D100 A32 Z08-H	✓	100	8	32	50	7	
SM64683	TK90 WNEX0806 D125 B40 Z10	✓	125	10	40	63	7	
SM64690	TK90 WNEX08 D160 C40 Z12	✓	160	12	40	63	7	

Size Designation	Master Insert*	Spare Parts		
		Screw	Torx Key	Screw Torque Value
				N·m
D35 - D160	WNEX 0806..	SSV M4x10-9514	STK-T15-9910	3,9

*Suitable Insert brand is YG-1

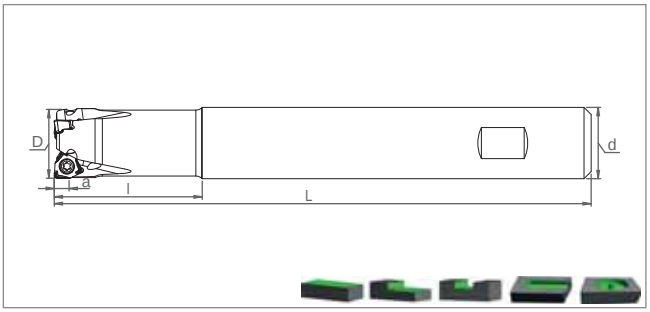

Ordering Code	Item Designation	Dimensions (mm)							Master Insert*
	ST90 WNGU 0403..		*D*	*d*	*Z*	*L*	*l*	*a*	
SM62290	ST90 WN04 D17 W16 L150 Z02-H	✓	17	16	2	150	30	4	WNGU 0403...
SM62634	ST90 WN04 D20 W20 L150 Z03-H	✓	20	20	3	150	40	4	
SM62306	ST90 WN04 D21 W20 L150 Z03-H	✓	21	20	3	150	30	4	
SM62641	ST90 WN04 D25 W25 L150 Z04-H	✓	25	25	4	150	40	4	
SM62313	ST90 WN04 D26 W25 L150 Z04-H	✓	26	25	4	150	30	4	

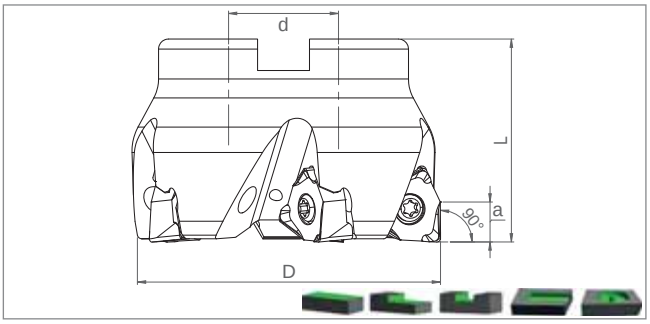

Ordering Code	Item Designation	Dimensions (mm)						Master Insert*
	TK90 WNGU 0403.. / 0806..		*D*	*Z*	*d*	*L*	*a*	
SM76945	TK90 WN04 D40 A16 Z05-H	✓	40	5	16	40	4	WNGU 0403...
SM62627	TK90 WN04 D50 A22 Z06-H	✓	50	6	22	40	4	
SM76952	TK90 WN04 D63 A22 Z08-H	✓	63	8	22	40	4	
SM00791	TK90 WNGU08 D50 A22 Z04-H	✓	50	4	22	40	7	WNGU 0806...
SM01514	TK90 WNGU08 D63 A22 Z05-H	✓	63	5	22	40	7	
SM00807	TK90 WNGU08 D63 A22 Z06-H	✓	63	6	22	40	7	
SM61552	TK90 WNGU08 D80 A27 Z07-H	✓	80	7	27	50	7	
SM01521	TK90 WNGU08 D100 A32 Z08-H	-	100	8	32	50	7	

Cooling mounting screw is optional / See Page "526" for cooling mounting screws.
İçten su vermeli montaj vidaları opsiyoneldir. / Bkz. Sayfa "526" İçten su vermeli montaj vidaları için.

Size Designation	Master Insert**	Spare Parts		
		Screw	Torx Key	Screw Torque Value
				N·m
D17 - D63	WNGU 0403...	SSV M2.5x6-9505	STK-T08-9908	1,0
D50 - D100	WNGU 0806..	SSV M4x12x5-9529	STK-T15-9910	3,9

*Suitable Insert brand is ACHTK

SMOXH CUTTING TOOLS
Kalitenin Yükselen Gücü

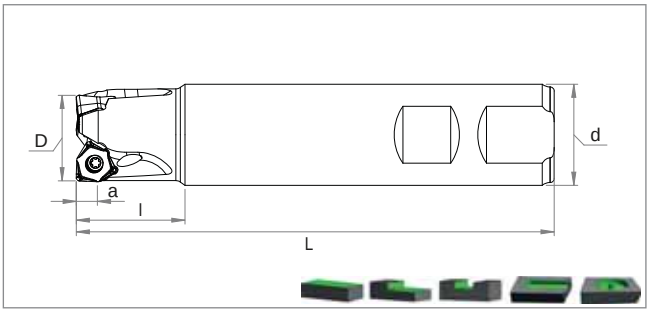

Ordering Code	Item Designation	Dimensions (mm)							Master Insert*
	ST90 WNMU 0504..		*D*	*d*	*Z*	*L*	*l*	*a*	
SM69909	ST90 WN05 D25 W25 L120 Z02-H	✓	25	25	2	120	30	5	WNMU 0504...
SM66939	ST90 WN05 D25 W25 L120 Z03-H	✓	25	25	3	120	25	5	
SM69916	ST90 WN05 D32 W32 L120 Z03-H	✓	32	32	3	120	30	5	

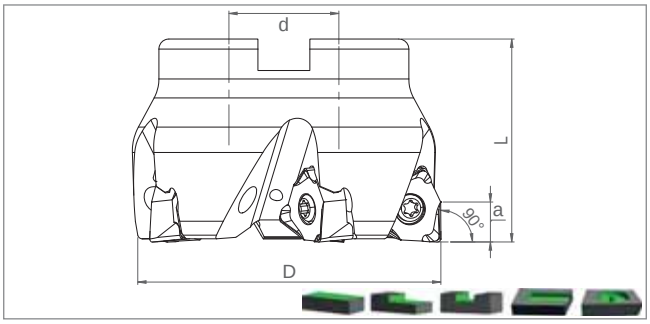

Ordering Code	Item Designation	Dimensions (mm)						Master Insert*
	TK90 WN.. 0504.. / 0806..		*D*	*Z*	*d*	*L*	*a*	
SM69923	**TK90 WN05 D40 A16 Z04-H**	✓	**40**	**4**	**16**	**40**	**5**	WNMU 0504...
SM69930	**TK90 WN05 D50 A22 Z05-H**	✓	**50**	**5**	**22**	**40**	**5**	
SM69947	**TK90 WN05 D63 A22 Z06-H**	✓	**63**	**6**	**22**	**40**	**5**	
SM25288	TK90 WN08 D50 A22 Z04-H	✓	50	4	22	40	8	WN.. 0806..
SM25295	TK90 WN08 D63 A22 Z05-H	✓	63	5	22	40	8	
SM25301	TK90 WN08 D80 A27 Z07-H	✓	80	7	27	50	8	
SM39612	TK90 WN08 D100 A32 Z08-H	✓	100	8	32	50	8	
SM32293	TK90 WN08 D125 B40 Z10	-	125	10	40	63	8	
SM75160	**TK90 WN08 D160 C40 Z10**	**-**	**160**	**10**	**40**	**63**	**8**	
SM60647	TK90 WN08 D160 C40 Z12	-	160	12	40	63	8	

Cooling mounting screw is optional / See Page "526" for cooling mounting screws.
İçten su vermeli montaj vidaları opsiyoneldir. / Bkz. Sayfa "526" İçten su vermeli montaj vidaları için.

Size Designation	Master Insert*	Spare Parts		
		Screw	Torx Key	Screw Torque Value
				N·m
D25 - D63	WNMU 0504...	SSV M3x6.5 LG-9509	STK-T08-9908	1,9
D50 - D160	WN.. 0806..	SSV M5x13-9519	STK-T20-9911	5,5

*Suitable Insert brand is KYCR

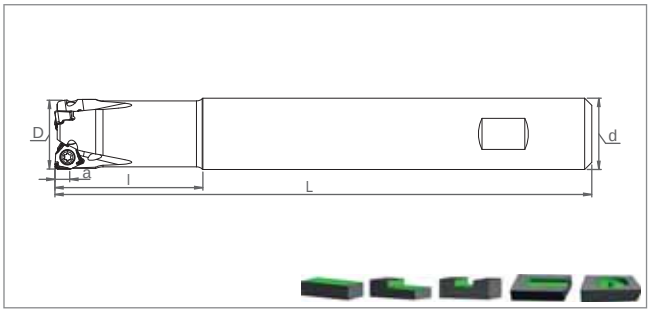

Ordering Code	Item Designation	Dimensions (mm)							Master Insert*
	ST90 XNEX 0403..		*D*	*d*	*Z*	*L*	*l*	*a*	
SM43183	ST90 XN04 D17 W16 L150 Z02-H	✓	17	16	2	150	30	4	XNEX 0403..
SM43190	ST90 XN04 D20 W20 L150 Z03-H	✓	20	20	3	150	40	4	
SM54028	ST90 XN04 D21 W20 L150 Z03-H	✓	21	20	3	150	30	4	
SM43206	ST90 XN04 D25 W25 L150 Z04-H	✓	25	25	4	150	40	4	
SM54035	ST90 XN04 D26 W25 L150 Z04-H	✓	26	25	4	150	30	4	
SM43213	ST90 **XN04 D32** W32 L150 Z05-H	✓	32	32	5	150	40	4	
SM54042	ST90 XN04 D33 W32 L150 Z05-H	✓	33	32	5	150	30	4	

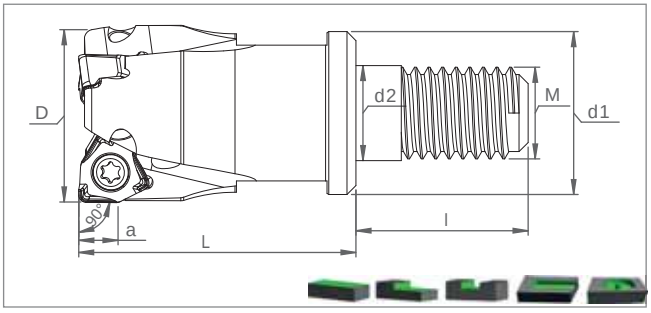

Ordering Code	Item Designation	Dimensions (mm)									Master Insert*
	MT90 XNEX 0403..		*D*	*Z*	*d1*	*d2*	*L*	*l*	*M*	*a*	
SM43824	MT90 XN04 D20 M10 L30 Z03-H	✓	20	3	18	10.5	30	19	10	4	XNEX 0403..
SM43831	MT90 XN04 D25 M12 L35 Z04-H	✓	25	4	21	12.5	35	23	12	4	
NEW **SM65079**	**MT90 XN04 D32 M16 L43 Z05-H**	✓	**32**	**5**	**29**	**17**	**43**	**23**	**16**	**4**	

Size Designation	Master Insert*	Spare Parts		
		Screw	Torx Key	Screw Torque Value
				N·m
D17 - D21	XNEX 0403..	SSV M2.5x5-9504	STK-T08-9908	1,0
D25 - D33		SSV M2.5x6-9505		

*Suitable Insert brand is SCO

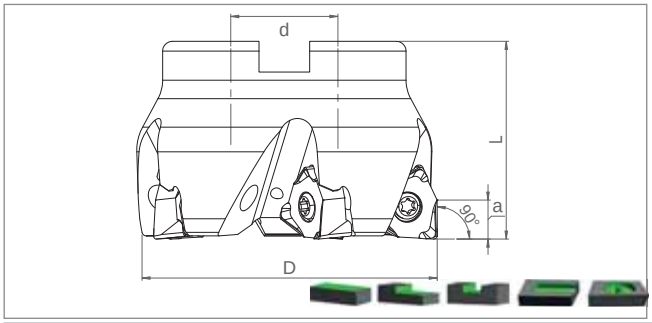

Ordering Code	Item Designation		Dimensions (mm)					Master Insert*
	TK90 XNEX 0403.. / 0806..		*D*	*Z*	*d*	*L*	*a*	
SM65055	**TK90 XN04 D40 A16 Z06-H**	✓	**40**	**6**	**16**	**40**	**4**	XNEX 0403..
SM70608	**TK90 XN04 D50 A22 Z06-H**	✓	**50**	**6**	**22**	**40**	**4**	
SM65062	**TK90 XN04 D63 A22 Z07-H**	✓	**63**	**7**	**22**	**40**	**4**	
SM28524	TK90 XNEX08 D50 A22 Z04-H	✓	50	4	22	40	7.5	XNEX 0806..
SM79069	**TK90 XNEX08 D50 A22 Z05-H**	✓	**50**	**5**	**22**	**40**	**7.5**	
SM28517	TK90 XNEX08 D63 A22 Z05-H	✓	63	5	22	40	7.5	
SM28500	TK90 XNEX08 D80 A27 Z07-H	✓	80	7	27	50	7.5	
SM32309	TK90 XNEX08 D100 A32 Z08-H	✓	100	8	32	50	7.5	
SM32316	TK90 XNEX08 D125 B40 Z10	-	125	10	40	63	7.5	
SM66496	**TK90 XNEX08 D160 C40 Z14**	**-**	**160**	**14**	**40**	**63**	**7.5**	

Size Designation	Master Insert*	Spare Parts		
		Screw	Torx Key	Screw Torque Value
				N·m
D40 - D63	XNEX 0403..	SSV M2.5x6-9505	STK-T08-9908	1,0
D50 - D125	XNEX 0806..	SSV M4x12-9515	STK-T15-9910	3,9

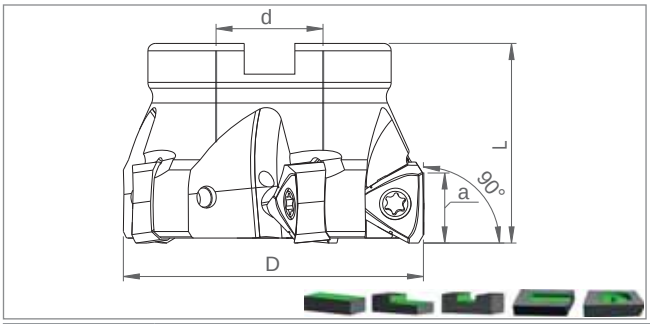

Ordering Code	Item Designation		Dimensions (mm)					Master Insert**
	TK90 TNMX 1806..		*D*	*Z*	*d*	*L*	*a*	
SM46986	TK90 TN18 D63 A22 Z05-H	✓	63	5	22	40	13	TNMX 1806..
SM46993	TK90 TN18 D80 A27 Z06-H	✓	80	6	27	50	13	
SM47006	TK90 TN18 D100 A32 Z07-H	✓	100	7	32	50	13	

Size Designation	Master Insert**	Spare Parts		
		Screw	Torx Key	Screw Torque Value
				N·m
D63 - D100	TNMX 1806..	SSV M4x12-9515	STK-T15-9910	3,9

*Suitable Insert brand is SCO
**Suitable Insert brand is TGTC

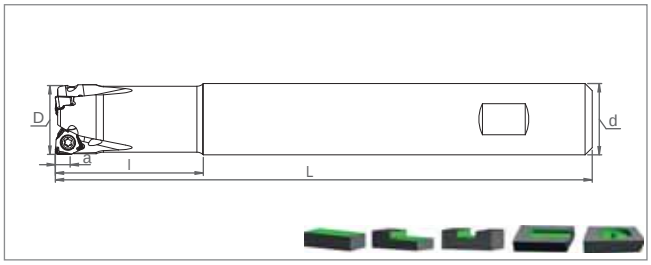

Ordering Code	Item Designation		Dimensions (mm)						Master Insert*
	ST90 WNGX 0403..		*D*	*d*	*Z*	*L*	*l*	*a*	
SM70431	ST90 WNGX0403 D20 W20 L150 Z02-H	✓	20	20	2	150	40	4.3	WNGX 0403..
SM70448	ST90 WNGX0403 D25 W25 L150 Z03-H	✓	25	25	3	150	40	4.3	
SM70455	ST90 WNGX0403 D32 W32 L150 Z04-H	✓	32	32	4	150	40	4.3	
SM70462	ST90 WNGX0403 D32 W32 L150 Z05-H	✓	32	32	5	150	40	4.3	

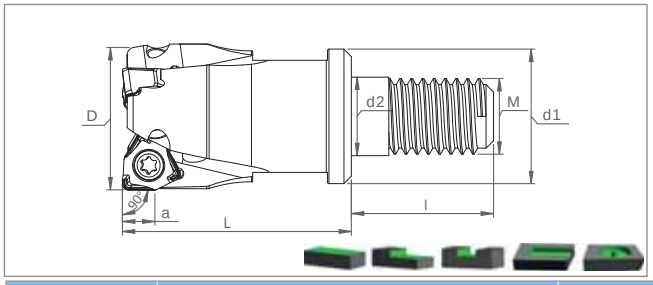

Ordering Code	Item Designation		Dimensions (mm)								Master Insert*
	MT90 WNGX 0403..		*D*	*Z*	*d1*	*d2*	*L*	*l*	*M*	*a*	
SM70479	MT90 WNGX0403 D20 M10 L30 Z02-H	✓	20	2	18	10.5	30	19	10	4.3	WNGX 0403..
SM70486	MT90 WNGX0403 D25 M12 L35 Z03-H	✓	25	3	21	12.5	35	23	12	4.3	
SM70493	MT90 WNGX0403 D32 M16 L35 Z04-H	✓	32	4	29	17	43	23	16	4.3	

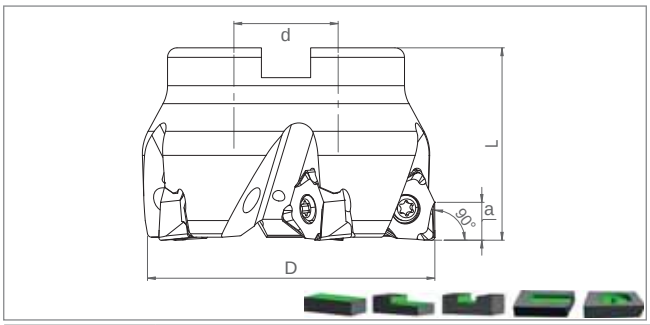

Ordering Code	Item Designation		Dimensions (mm)					Master Insert*
	TK90 WNGX 0806..		*D*	*Z*	*d*	*L*	*a*	
SM43619	TK90 WNGX08 D50 A22 Z04-H	✓	50	4	22	40	8.2	WNGX 0806..
SM43626	TK90 WNGX08 D63 A22 Z05-H	✓	63	5	22	40	8.2	
SM43633	TK90 WNGX08 D80 A27 Z06-H	✓	80	6	27	50	8.2	
SM43640	TK90 WNGX08 D100 A32 Z08-H	✓	100	8	32	50	8.2	

Cooling mounting screw is optional / See Page "526" for cooling mounting screws.
İçten su vermeli montaj vidaları opsiyoneldir. / Bkz. Sayfa "526" İçten su vermeli montaj vidaları için.

Size Designation	Master Insert*	Spare Parts		
		Screw	Torx Key	Screw Torque Value
				N·m
D20 - D32	WNGX.. 0403..	SSV M2.5x6-9505	STK-T08-9908	1,0
D50 - D100	WNGX.. 0806..	SSV M5x13-9519	STK-T20-9911	5,5

*Suitable Insert brand is KRLY

SMOXH CUTTING TOOLS
Kalitenin Yükselen Gücü

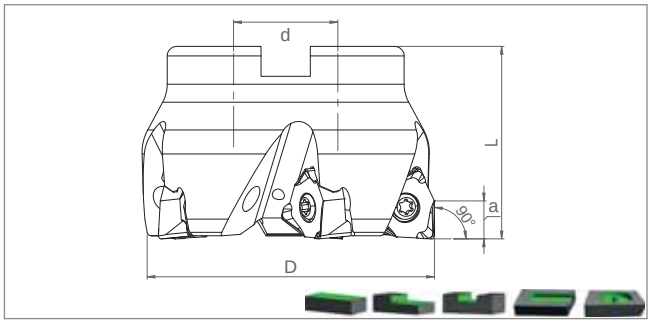

Ordering Code	Item Designation	Dimensions (mm)						Master Insert*
	TK90 WNHU 0806..		*D*	*Z*	*d*	*L*	*a*	
SM43572	TK90 WNHU08 D50 A22 Z04-H	✓	50	4	22	40	7.5	WNHU 0806..
SM43589	TK90 WNHU08 D63 A22 Z05-H	✓	63	5	22	40	7.5	
SM43596	TK90 WNHU08 D80 A27 Z06-H	✓	80	6	27	50	7.5	
SM43602	TK90 WNHU08 D100 A32 Z08-H	✓	100	8	32	50	7.5	

Cooling mounting screw is optional / See Page "526" for cooling mounting screws.
İçten su vermeli montaj vidaları opsiyoneldir. / Bkz. Sayfa "526" İçten su vermeli montaj vidaları için.

Size Designation	Master Insert*	Spare Parts		
		Screw	Torx Key	Screw Torque Value
				N·m
D50 - D100	WNHU.. 0806..	SSV M4x12x5-9529	STK-T15-9910	3,9

*Suitable Insert brand is ZCC-CT

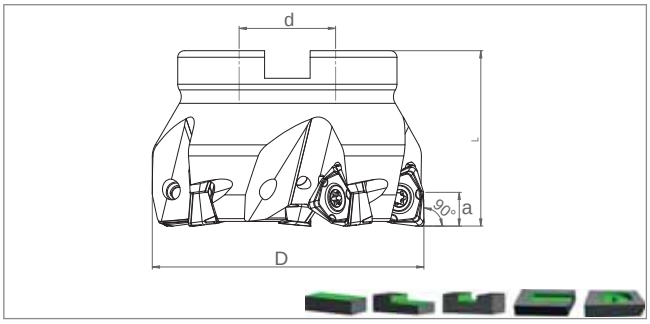

Ordering Code	Item Designation	Dimensions (mm)						Master Insert*
	TK90 WN.U 0705..		*D*	*Z*	*d*	*L*	*a*	
SM53427	TK90 WN07 D50 A22 Z04-H	✓	50	4	22	40	7	WN.U 0705..
SM53434	TK90 WN07 D63 A22 Z05-H	✓	63	5	22	40	7	
SM53441	TK90 WN07 D80 A27 Z07-H	✓	80	7	27	50	7	
SM53458	TK90 WN07 D100 A32 Z08-H	✓	100	8	32	50	7	

Cooling mounting screw is optional / See Page "526" for cooling mounting screws.
İçten su vermeli montaj vidaları opsiyoneldir. / Bkz. Sayfa "526" İçten su vermeli montaj vidaları için.

Size Designation	Master Insert*	Spare Parts		
		Screw	Torx Key	Screw Torque Value
				N·m
D50 - D100	WN.U.. 0705..	SSV M4x12-9515	STK-T15-9910	3,9

*Suitable Insert brand is ISC

SMOXH® CUTTING TOOLS
Kalitenin Yükselen Gücü

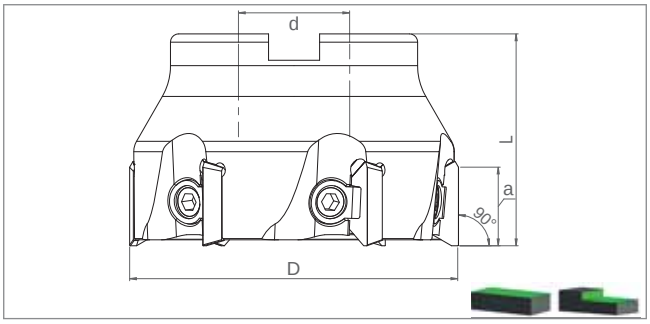

Ordering Code	Item Designation	Dimensions (mm)						Master Insert*
TK90 TPKN 1603.. / 2204.. ISO			*D*	*Z*	*d*	*L*	*a*	
SM32774	TK90P TP16 D63 A22 Z05	-	63	5	22	40	12	TPKN 1603.. ISO
SM32781	TK90P TP16 D80 A27 Z07	-	80	7	27	50	12	
SM32798	TK90P TP16 D100 A32 Z08	-	100	8	32	50	12	
SM32804	TK90P TP16 D125 B40 Z09	-	125	9	40	63	12	
SM32811	TK90P TP22 D63 A22 Z05	-	63	5	22	40	18	TPKN 2204.. ISO
SM32828	TK90P TP22 D80 A27 Z06	-	80	6	27	50	18	
SM32835	TK90P TP22 D100 A32 Z07	-	100	7	32	50	18	
SM32842	TK90P TP22 D125 B40 Z08	-	125	8	40	63	18	
SM32859	TK90P TP22 D160 C40 Z09	-	160	9	40	63	18	
SM32866	TK90P TP22 D200 C60 Z12	-	200	12	60	63	18	
SM32880	TK90P TP22 D315 D60 Z18	-	315	18	60	63	18	

Size Designation	Master Insert*	Spare Parts		
		Clamp Part	Screw	Allen Key
D50 - D125	TPKN.. 1603..	TKBP 9116	TKSV M8x1x18 9227	SAK-AA5-9904
D63 - D315	TPKN. 2204..			

*Suitable Insert brand is ISO

75-90 MILLING TOOLS

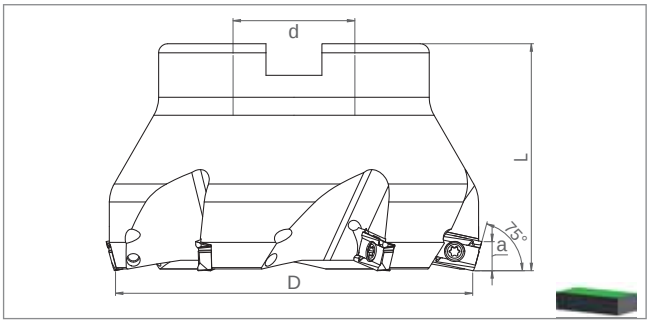

Ordering Code	Item Designation	Dimensions (mm)						Master Insert*
	TK75 APKT 1003.. / 1604.. ISO		*D*	*Z*	*d*	*L*	*a*	
SM28913	TK75 AP10 D63 A22 Z05-H	✓	63	5	22	40	5	APKT 1003.. SUITABLE ISO INSERT
SM28906	TK75 AP10 D80 A27 Z06-H	✓	80	6	27	50	5	
SM28890	TK75 AP10 D100 A32 Z07-H	✓	100	7	32	50	5	
SM14626	TK75 AP16 D63 A22 Z05-H	✓	63	5	22	40	10	APKT 1604.. SUITABLE ISO INSERT
SM28876	TK75 AP16 D80 A27 Z06-H	✓	80	6	27	50	10	
SM28869	TK75 AP16 D100 A32 Z07-H	✓	100	7	32	50	10	
SM38431	TK75 AP16 D125 B40 Z08	-	125	8	40	63	10	

Size Designation	Master Insert*	Spare Parts		
		Screw	Torx Key	Screw Torque Value
				N·m
D63 - D100	APKT 1003..	SSV M2.5x7-9506	STK-T08-9908	1,0
D63 - D125	APKT 1604..	SSV M4x9x5-9528	STK-T15-9910	2,7

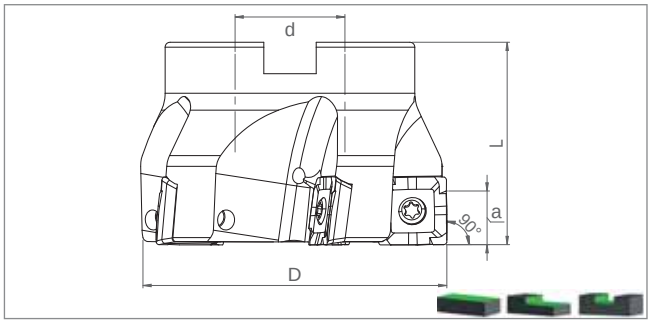

Ordering Code	Item Designation	Dimensions (mm)						Master Insert*
	TK90 SEMT 1304..		*D*	*Z*	*d*	*L*	*a*	
SM55247	TK90 SE1304 D50 A22 Z04-H	✓	50	4	22	40	11	SEMT 1304..
SM55254	TK90 SE1304 D63 A22 Z05-H	✓	63	5	22	40	11	
SM55261	TK90 SE1304 D80 A27 Z06-H	✓	80	6	27	50	11	

Size Designation	Master Insert*	Spare Parts		
		Screw	Torx Key	Screw Torque Value
				N·m
D50 - D80	SEMT 1304..	SSV M4x9x5-9528	STK-T15-9910	3,9

*Suitable Insert brand is ISO
**Suitable Insert brand is TGTC

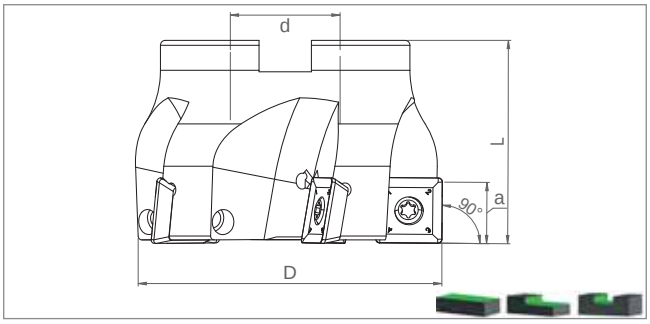

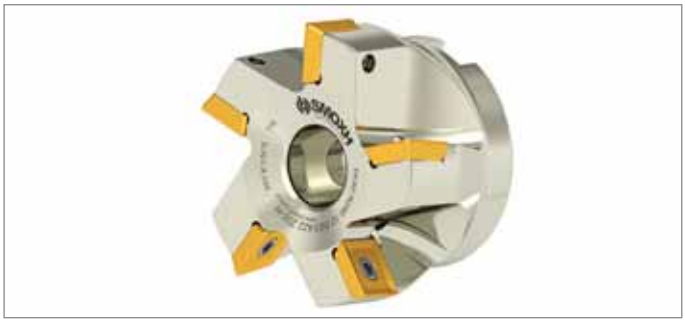

Ordering Code	Item Designation	Dimensions (mm)						Master Insert*
	TK90 R290.12.. / SE..12T3		*D*	*Z*	*d*	*L*	*a*	
SM29026	TK90 R290.12 D50 A22 Z04-H	✓	50	4	22	40	12	R290.12..
SM29019	TK90 R290.12 D63 A22 Z05-H	✓	63	5	22	40	12	
SM29002	TK90 R290.12 D80 A27 Z07-H	✓	80	7	27	50	12	
SM28999	TK90 R290.12 D100 A32 Z09-H	✓	100	9	32	50	12	
SM14213	TK90 R290.12 D125 B40 Z11	-	125	11	40	63	12	

Size Designation	Master Insert*	Spare Parts		
		Screw	Torx Key	Screw Torque Value
				N·m
D50 - D125	R290.12.. SE..12T3..	SSV M3.5x10-9511	STK-T15-9910	2,7

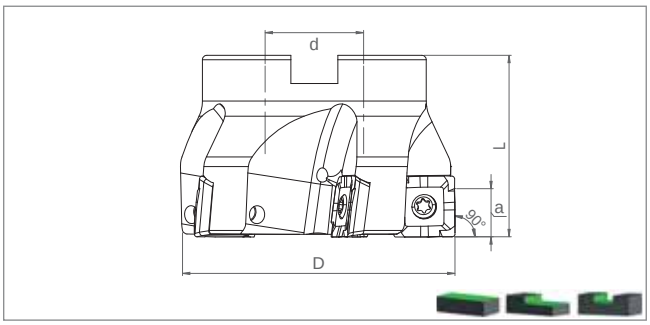

Ordering Code	Item Designation	Dimensions (mm)						Master Insert*
	TK90 SOMT 12T3..		*D*	*Z*	*d*	*L*	*a*	
SM32224	TK90 SO12 D50 A22 Z04-H	✓	50	4	22	40	11	SOMT 12T3..
SM32248	TK90 SO12 D63 A22 Z05-H	✓	63	5	22	40	11	
SM32262	TK90 SO12 D80 A27 Z07-H	✓	80	7	27	50	11	

Cooling mounting screw is optional / See Page "526" for cooling mounting screws.
İçten su vermeli montaj vidaları opsiyoneldir. / Bkz. Sayfa "526" İçten su vermeli montaj vidaları için.

Size Designation	Master Insert**	Spare Parts		
		Screw	Torx Key	Screw Torque Value
				N·m
D50 - D80	SOMT 12T3..	SSV M4x9x5-9528	STK-T15-9910	3,9

*Suitable Insert brand is ZCC-CT / SNDV
**Suitable Insert brand is MTSBH

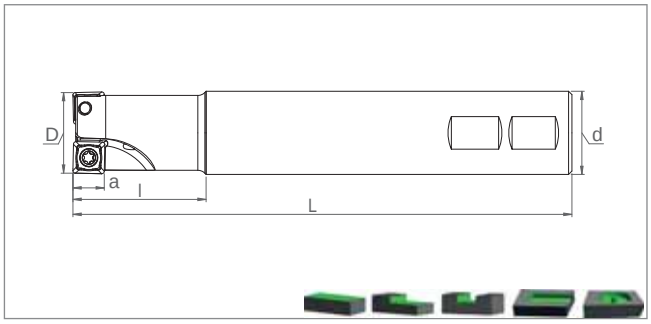

Ordering Code	Item Designation	Dimensions (mm)							Master Insert*
	ST90 SDMT 09T3..		*D*	*d*	*Z*	*L*	*l*	*a*	
SM56084	ST90 SD09T3 D25 W25 L150 Z02-H	✓	25	25	2	150	40	8.4	SDMT 09T3..
SM56169	ST90 SD09T3 D26 W25 L150 Z02-H	✓	26	25	2	150	30	8.4	
SM56305	ST90 SD09T3 D32 W32 L150 Z03-H	✓	32	32	3	150	40	8.4	
SM56312	ST90 SD09T3 D33 W32 L150 Z03-H	✓	33	32	3	150	30	8.4	

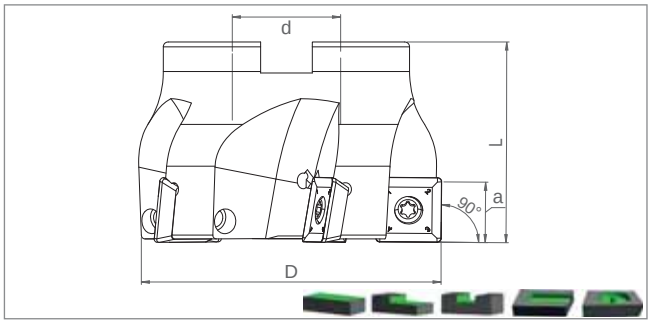

Ordering Code	Item Designation	Dimensions (mm)						Master Insert*
	TK90 SDMT 09T3..		*D*	*Z*	*d*	*L*	*a*	
SM53472	TK90 SD09T3 D40 A16 Z04-H	✓	40	4	16	40	8.4	SDMT 09T3..
SM53489	TK90 SD09T3 D50 A22 Z05-H	✓	50	5	22	40	8.4	
SM53496	TK90 SD09T3 D63 A22 Z06-H	✓	63	6	22	40	8.4	

Cooling mounting screw is optional / See Page "526" for cooling mounting screws.
İçten su vermeli montaj vidaları opsiyoneldir. / Bkz. Sayfa "526" İçten su vermeli montaj vidaları için.

Size Designation	Master Insert*	Spare Parts		
		Screw	Torx Key	Screw Torque Value
				N·m
D25 - D63	SDMT 09T3..	SSV M3.5x8-SC-9513	STK-T10-9909	2,7

*Suitable Insert brand is WLTR

SMOXH® CUTTING TOOLS
Kalitenin Yükselen Gücü

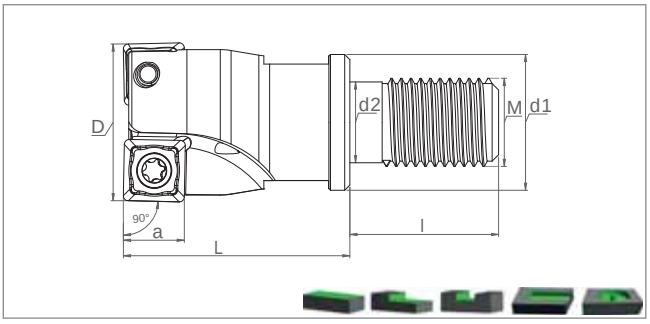

Ordering Code	Item Designation		Dimensions (mm)								Master Insert*
	MT90 SDMT 09T3..		*D*	*Z*	*d1*	*d2*	*L*	*l*	*M*	*a*	
SM56534	MT90 SD09T3 D25 M12 L35 Z02-H	✓	25	2	21	12.5	35	23	12	5.5	SDMT 09T3..
SM56541	MT90 SD09T3 D32 M16 L43 Z03-H	✓	32	3	29	17	43	23	16	5.5	

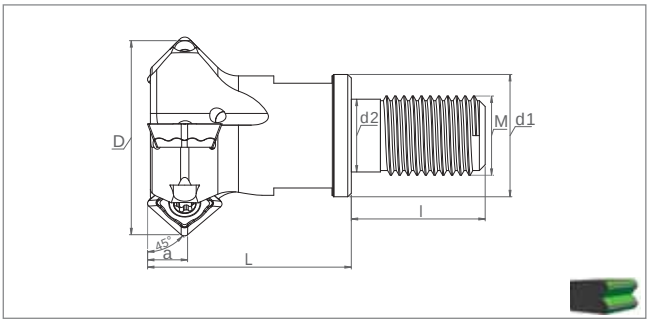

Ordering Code	Item Designation		Dimensions (mm)									Master Insert*
	MT45 SDMT 09T3..		*D2*	*D1*	*Z*	*d1*	*d2*	*L*	*l*	*M*	*a*	
SM56503	MT45 SD09T3 D20 M10 L30 Z02-H	✓	20	32.8	2	18	10.5	30	19	10	5.5	SDMT 09T3..
SM56510	MT45 SD09T3 D25 M12 L35 Z03-H	✓	25	37.8	3	21	12.5	35	23	12	5.5	
SM56527	MT45 SD09T3 D32 M16 L43 Z03-H	✓	32	44.8	3	29	17	43	23	16	5.5	

Size Designation	Master Insert*	Spare Parts		
		Screw	Torx Key	Screw Torque Value
				N·m
D20 - D32	SDMT 09T3..	SSV M3.5x8-SC-9513	STK-T10-9909	2,7

*Suitable Insert brand is WLTR

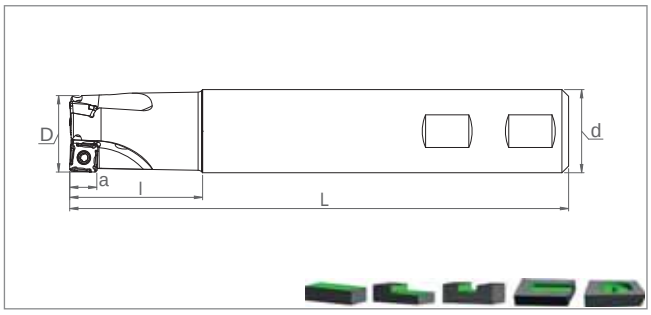

Ordering Code	Item Designation	Dimensions (mm)							Master Insert*
	ST90 490R-08..		*D*	*d*	*Z*	*L*	*l*	*a*	
SM56640	ST90 490R-08 D20 W20 L150 Z02-H	✓	20	20	2	150	40	5.5	490R-08..
SM56657	ST90 490R-08 D25 W25 L150 Z03-H	✓	25	25	3	150	40	5.5	
SM56664	ST90 490R-08 D26 W25 L150 Z03-H	✓	26	25	3	150	30	5.5	
SM56671	ST90 490R-08 D32 W32 L150 Z04-H	✓	32	32	4	150	40	5.5	
SM56688	ST90 490R-08 D33 W32 L150 Z04-H	✓	33	32	4	150	30	5.5	

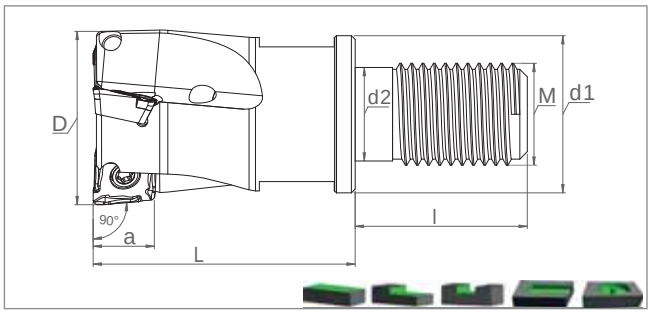

Ordering Code	Item Designation	Dimensions (mm)									Master Insert*
	MT90 490R-08..		*D*	*Z*	*d1*	*d2*	*L*	*l*	*M*	*a*	
SM56695	MT90 490R-08 D20 M10 L30 Z02-H	✓	20	2	18	10.5	30	19	10	5.5	490R-08..
SM56701	MT90 490R-08 D25 M12 L35 Z03-H	✓	25	3	21	12.5	35	23	12	5.5	
SM56718	MT90 490R-08 D32 M16 L43 Z04-H	✓	32	4	29	17	43	23	16	5.5	

Size Designation	Master Insert*	Spare Parts		
		Screw	Torx Key	Screw Torque Value
				N·m
D20 - D33	490R-08..**	SSV M2.5x7-9506	STK-T08-9908	1,0

**Body corners should be modified for R2 and more radius inserts / R2 ve üstü radyüslü uçlarda takımın modifiye edilmesi gerekmektedir.

*Suitable Insert brand is SNDVK

SMOXH CUTTING TOOLS
Kalitenin Yükselen Gücü

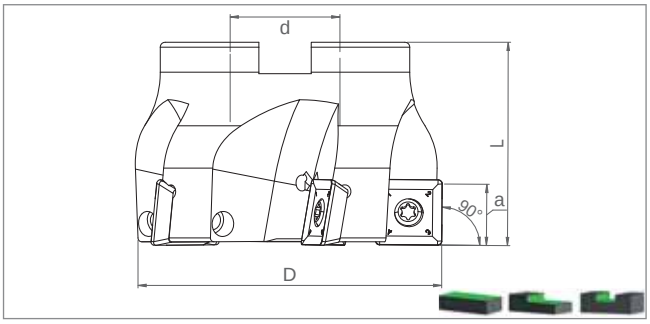

Ordering Code	Item Designation	Dimensions (mm)						Master Insert*
	TK90 490R-08.. / 490R-14		*D*	*Z*	*d*	*L*	*a*	
SM50303	TK90 490R-08 D40 A16 Z04-H	✓	40	4	16	40	5.5	490R-08..
SM50310	TK90 490R-08 D50 A22 Z05-H	✓	50	5	22	40	5.5	
SM50327	TK90 490R-08 D63 A22 Z06-H	✓	63	6	22	50	5.5	
SM32101	TK90 490R-14 D50 A22 Z04-H	✓	50	4	22	40	10.6	490R-14..
SM32118	TK90 490R-14 D63 A22 Z05-H	✓	63	5	22	40	10.6	
SM32132	TK90 490R-14 D80 A27 Z07-H	✓	80	7	27	50	10.6	
SM58484	TK90 490R-14 D80 A27 Z08-H	✓	80	8	27	50	10.6	

Cooling mounting screw is optional / See Page "526" for cooling mounting screws.
İçten su vermeli montaj vidaları opsiyoneldir. / Bkz. Sayfa "526" İçten su vermeli montaj vidaları için.

Size Designation	Master Insert*	Spare Parts		
		Screw	Torx Key	Screw Torque Value
				N·m
D50 - D63	490R-08..**	SSV M2.5x7-9506	STK-T08-9908	1,0
D50 - D80	490R-14..**	SSV M3.5x10-9511	STK-T15-9910	2,7

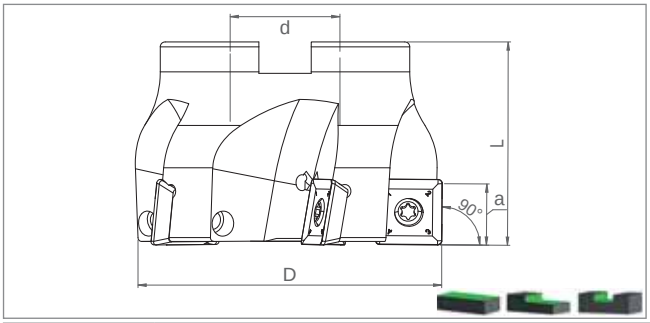

Ordering Code	Item Designation	Dimensions (mm)						Master Insert***
	TK90 SDMT 1506..		*D*	*Z*	*d*	*L*	*a*	
SM00609	TK90 SDMT15 D50 A22 Z04-H	✓	50	4	22	40	12	SDMT 1506..
SM00616	TK90 SDMT15 D63 A22 Z05-H	✓	63	5	22	40	12	
SM00623	TK90 SDMT15 D80 A27 Z06-H	✓	80	6	27	50	12	
SM00630	TK90 SDMT15 D100 A32 Z08-H	✓	100	8	32	50	12	
SM00647	TK90 SDMT15 D125 B40 Z09	-	125	9	40	63	12	

Cooling mounting screw is optional / See Page "526" for cooling mounting screws.
İçten su vermeli montaj vidaları opsiyoneldir. / Bkz. Sayfa "526" İçten su vermeli montaj vidaları için.

Size Designation	Master Insert***	Spare Parts		
		Screw	Torx Key	Screw Torque Value
				N·m
D50 - D125	SDMT 1506..	SSV M4.5x11 9518	STK-T20-9911	4,7

*Suitable Insert brand is SNDVK
**Body corners should be modified for R2 and more radius inserts / R2 ve üstü radyüslü uçlarda takımın modifiye edilmesi gerekmektedir.
***Suitable Insert brand is WDA

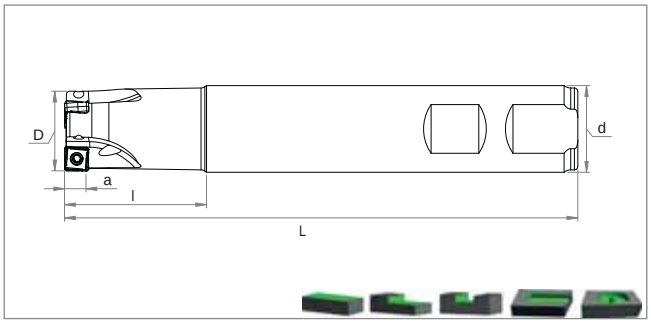

Ordering Code	Item Designation	Dimensions (mm)							Master Insert*
	ST90 SQKU 0703..		*D*	*d*	*Z*	*L*	*l*	*a*	
SM71247	ST90 SQ07 D16 W16 L150 Z02-H	✓	16	16	2	150	40	5	SQKU 0703..
SM71254	ST90 SQ07 D20 W20 L150 Z02-H	✓	20	20	2	150	40	5	
SM71261	ST90 SQ07 D25 W25 L150 Z03-H	✓	25	25	3	150	40	5	
SM71278	ST90 SQ07 D32 W32 L150 Z04-H	✓	32	32	4	150	40	5	

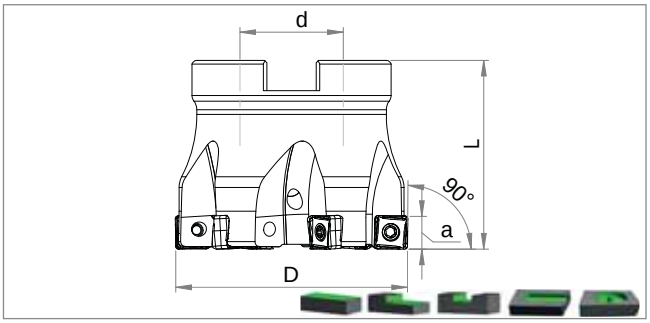

Ordering Code	Item Designation	Dimensions (mm)						Master Insert*
	TK90 SQKU 0703..		*D*	*Z*	*d*	*L*	*a*	
SM71285	TK90 SQ07 D40 A16 Z06-H	✓	40	6	16	40	5	SQKU 0703..
SM71292	TK90 SQ07 D50 A22 Z06-H	✓	50	6	22	40	5	
SM71308	TK90 SQ07 D63 A22 Z07-H	✓	63	7	22	40	5	

Cooling mounting screw is optional / See Page "526" for cooling mounting screws.
İçten su vermeli montaj vidaları opsiyoneldir. / Bkz. Sayfa "526" İçten su vermeli montaj vidaları için.

Size Designation	Master Insert*	Spare Parts		
		Screw	Torx Key	Screw Torque Value
				N·m
D16 - D63	SQKU 0703..	SSV M2.5x7-9506	STK-T08-9908	1,0

*Suitable Insert brand is TGTC

SMOXH CUTTING TOOLS
Kalitenin Yükselen Gücü

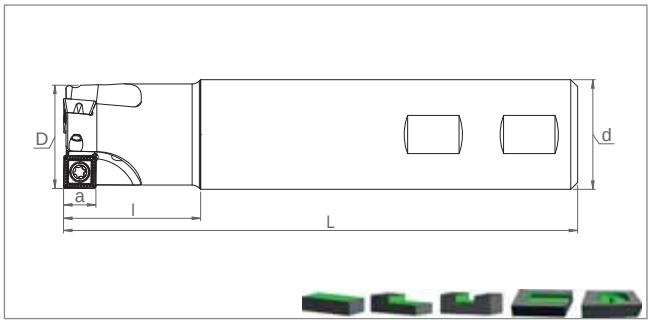

Ordering Code	Item Designation	Dimensions (mm)							Master Insert*
	ST90 SD.T 09M4..		*D*	*d*	*Z*	*L*	*l*	*a*	
SM59054	ST90 SD09M4 D25 W25 L150 Z02-H	✓	25	25	2	150	40	7	SD.T 09M4..
SM59061	ST90 SD09M4 D32 W32 L150 Z03-H	✓	32	32	3	150	40	7	
SM59078	ST90 SD09M4 D35 W32 L150 Z03-H	✓	35	32	3	150	30	7	

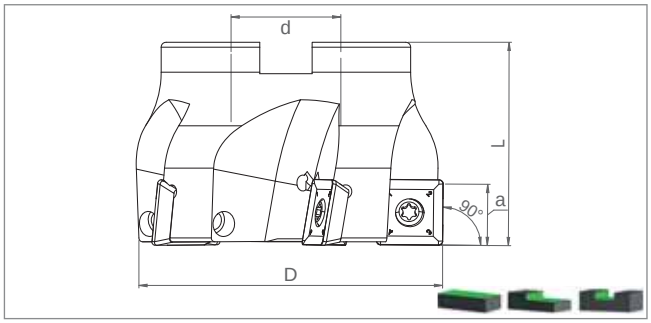

Ordering Code	Item Designation	Dimensions (mm)						Master Insert*
	TK90 SD.T 09M4.. / 1305..		*D*	*Z*	*d*	*L*	*a*	
SM54530	TK90 SD09M4 D40 A16 Z04-H	✓	40	4	16	40	7	SD.T 09M4..
SM54547	TK90 SD09M4 D50 A22 Z05-H	✓	50	5	22	40	7	
SM54554	TK90 SD09M4 D63 A22 Z06-H	✓	63	6	22	40	7	
SM56855	TK90 SD1305 D50 A22 Z04-H	✓	50	4	22	40	11	SD.T 1305..
SM56862	TK90 SD1305 D63 A22 Z05-H	✓	63	5	22	40	11	
SM56879	TK90 SD1305 D80 A27 Z06-H	✓	80	6	27	50	11	
SM56886	TK90 SD1305 D100 A32 Z07-H	✓	100	7	32	50	11	

Cooling mounting screw is optional / See Page “526” for cooling mounting screws.
İçten su vermeli montaj vidaları opsiyoneldir. / Bkz. Sayfa “526” İçten su vermeli montaj vidaları için.

Size Designation	Master Insert*	Spare Parts		
		Screw	Torx Key	Screw Torque Value
D25 - D63	SD.T 09M4..	SSV M3.5x8-9510	STK-T15-9910	2,7 N·m
D50 -D100	SD.T 1305..	SSV M4.5x11-9518	STK-T20-9911	4,7 N·m

*Suitable Insert brand is KRLY

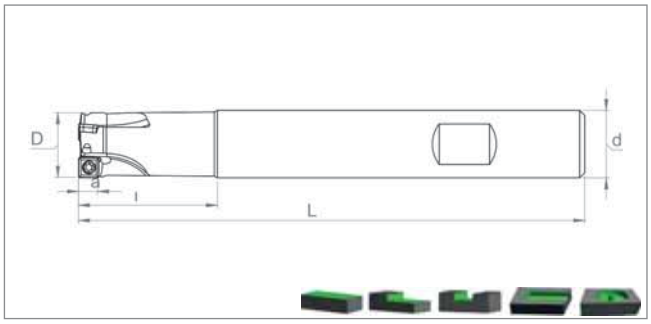

Ordering Code	Item Designation	Dimensions (mm)							Master Insert*
	ST90 SPMG 0602.. / 07T3.. / 0904..		*D*	*d*	*Z*	*L*	*l*	*a*	
SM36901	ST90 SP06 D17 W16 L150 Z02	-	17	16	2	150	30	6	SPMG 060204
SM36918	ST90 SP06 D20 W20 L150 Z03	-	20	20	3	150	40	6	
SM63563	**ST90 SP07 D19.5 W20 l30 L120 Z02**	**-**	**19.5**	**20**	**2**	**120**	**30**	**7**	SPMG 07T308
SM36925	ST90 SP07 D22 W20 L150 Z03	-	22	20	3	150	30	7	
SM36949	ST90 SP07 D25 W25 L150 Z03	-	25	25	3	150	40	7	
SM36956	ST90 SP07 D26 W25 L150 Z03	-	26	25	3	150	30	7	
SM36970	ST90 SP09 D32 W32 L150 Z03	-	32	32	3	150	40	9	SPMG 090408
SM36987	ST90 SP09 D33 W32 L150 Z03	-	33	32	3	150	30	9	

Size Designation	Master Insert*	Spare Parts		
		Screw	Torx Key	Screw Torque Value
				N·m
D17 - D20	SPMG 060204	SSV M2.2x5-9503	STK-T06-9906	0,4
D19.5 - D26	SPMG 07T308	SSV M2.5x6-9505	STK-T08-9908	1,0
D32 - D33	SPMG 090408	SSV M3.5x8-9510	STK-T15-9910	5,5

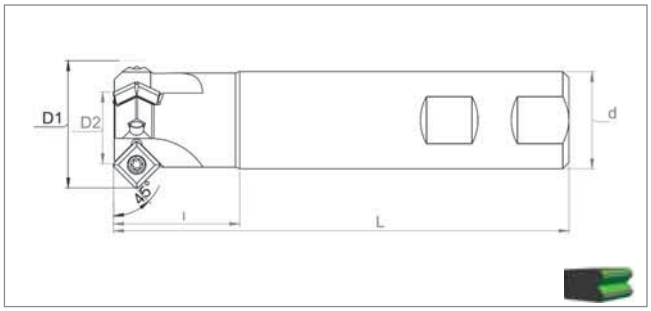

Ordering Code	Item Designation	Dimensions (mm)							Master Insert*
	HF45 SPMG 0904.. / 1104.. CHAMFERING TOOLS	*D1° D2°*	*D2*	*D1*	*L*	*d*	*Z*	*l*	
SM15555	HF45 SP09 D11-25 W20 L150 Z01	45°	11	25	150	20	1	30	SPMG 0904..
SM15562	HF45 SP11 D24-38 W25 L150 Z02	45°	24	38	150	25	2	35	SPMG 1104..
SM15579	HF45 SP11 D31-45 W32 L150 Z03	45°	31	45	150	32	3	40	

Size Designation	Master Insert*	Spare Parts		
		Screw	Torx Key	Screw Torque Value
				N·m
D11-25	SPMG 0904..	SSV M3.5x10-9511	STK-T15-9910	2,7
D24-38 - D31-45	SPMG 1104	SSV M4x10-9514		3,9

*Suitable Insert brand is TGTC

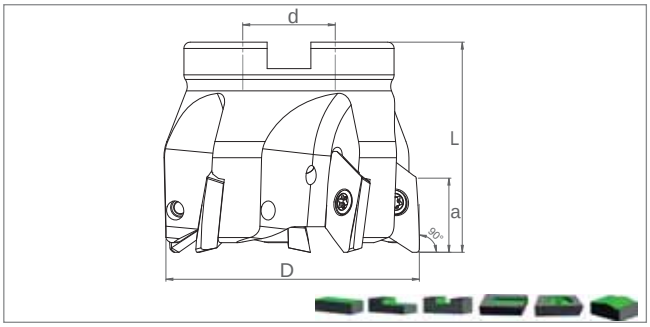

Ordering Code	Item Designation	Dimensions (mm)						Master Insert*
	TK90 XEKT-MA 19M5..		*D*	*Z*	*d*	*L*	*a*	
SM55346	TK90 XE19 D40 A16 Z03-H	✓	40	3	16	45	17	XEKT-MA 19M5..
SM55353	TK90 XE19 D50 A22 Z04-H	✓	50	4	22	50	17	
SM55360	TK90 XE19 D63 A22 Z05-H	✓	63	5	22	50	17	

Size Designation	Master Insert*	Spare Parts		
		Screw	Torx Key	Screw Torque Value
				N·m
D40 - D63	XEKT-MA 19M5**	SSV M4x10-9514	STK-T15-9910	3,9

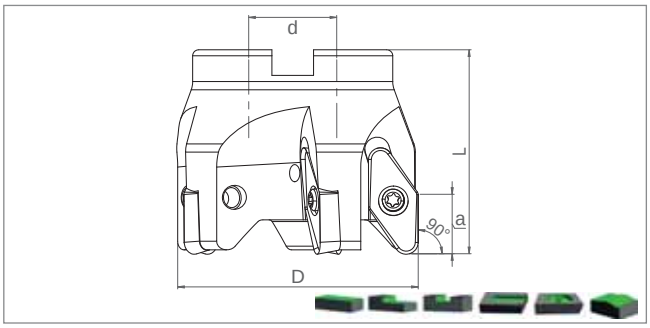

Ordering Code	Item Designation	Dimensions (mm)						Master Insert*
	TK90 VCGT 1604.. / 2205..		*D*	*Z*	*d*	*L*	*a*	
SM33849	TK90 VC16 D40 A16 Z03-H	✓	40	3	16	40	11	VCGT 1604..
SM33863	TK90 VC16 D50 A22 Z04-H	✓	50	4	22	40	11	
SM33887	TK90 VC16 D63 A22 Z05-H	✓	63	5	22	40	11	
SM33900	TK90 VC16 D80 A27 Z05-H	✓	80	5	27	50	11	
SM33924	TK90 VC22 D50 A22 Z04-H	✓	50	4	22	50	14	VCGT 2205..
SM33931	TK90 VC22 D63 A22 Z05-H	✓	63	5	22	50	14	
SM33979	TK90 VC22 D80 A27 Z05-H	✓	80	5	27	50	14	

Size Designation	Master Insert***	Spare Parts		
		Screw	Torx Key	Screw Torque Value
				N·m
D40 - D80	VCGT 1604..	SSV M3.5x10-9511	STK-T15-9910	2,7
D50 - D80	VCGT 2205..****	SSV M5x13-9519	STK-T20-9911	5,5

*Suitable Insert brand is KRLY
**Body corners should be modified for R0.4-3.2 and more radius inserts / R0.4-3.2 ve üstü radyüslü uçlarda takımın modifiye edilmesi gerekmektedir. ■
***Suitable Insert brand is ISO
****Suitable Insert brand is CRTZ

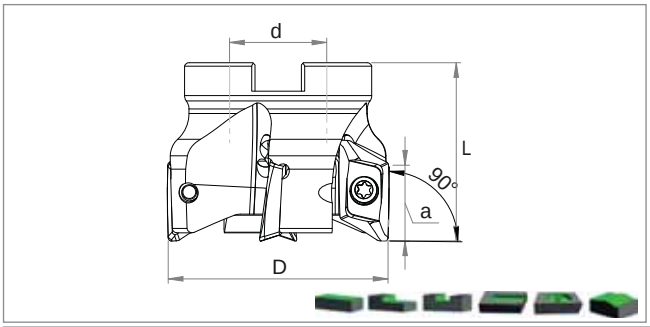

Ordering Code	Item Designation	Dimensions (mm)						Master Insert*
	TK90 XEVT 1605..-2206..		*D*	*Z*	*d*	*L*	*a*	
SM71384	TK90 XE16 D50 A22 Z04-H	✓	50	4	22	50	16	XEVT 1606..
SM71391	TK90 XE16 D63 A22 Z05-H	✓	63	5	22	50	16	
SM71407	TK90 XE16 D80 A27 Z06-H	✓	80	6	27	50	16	
SM71414	TK90 XE22 D50 A22 Z03-H	✓	50	3	22	55	21	XEVT 2206..
SM71421	TK90 XE22 D63 A22 Z04-H	✓	63	4	22	55	21	
SM71438	TK90 XE22 D80 A27 Z05-H	✓	80	5	27	55	21	

Size Designation	Master Insert*	Spare Parts		
		Screw	Torx Key	Screw Torque Value
				N·m
D50 - D80	XEVT 1606..	SSV M4x10-9514	STK-T15-9910	3,9
D50 - D80	XEVT 2206..	SSV M5x13-9519	STK-T20-9911	5,5

**Body corners should be modified for R0.4-3.2 and more radius inserts / R0.4-3.2 ve üstü radyüslü uçlarda takımın modifiye edilmesi gerekmektedir.

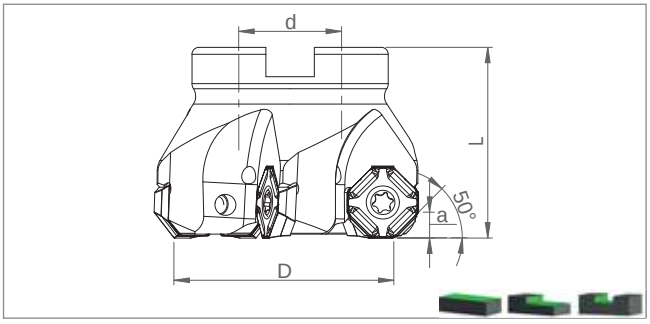

Ordering Code	Item Designation	Dimensions (mm)						Master Insert**
	TK50 SYHU 0704..		*D*	*Z*	*d*	*L*	*a*	
SM46856	TK50 SY07 D50 A22 Z05-H	✓	50	5	22	40	4.6	SYHU 0704..
SM46863	TK50 SY07 D63 A22 Z06-H	✓	63	6	22	40	4.6	
SM46870	TK50 SY07 D80 A27 Z07-H	✓	80	7	27	50	4.6	
SM46887	TK50 SY07 D100 A32 Z08-H	✓	100	8	32	50	4.6	

Cooling mounting screw is optional / See Page "526" for cooling mounting screws.
İçten su vermeli montaj vidaları opsiyoneldir. / Bkz. Sayfa "526" İçten su vermeli montaj vidaları için.

Size Designation	Master Insert**	Spare Parts		
		Screw	Torx Key	Screw Torque Value
				N·m
D50 - D100	SYHU 0704..	SSV M4x12-9515	STK-T15-9910	3,9

*Suitable Insert brand is TGTC
**Suitable Insert brand is ISC

SMOXH® CUTTING TOOLS
Kalitenin Yükselen Gücü

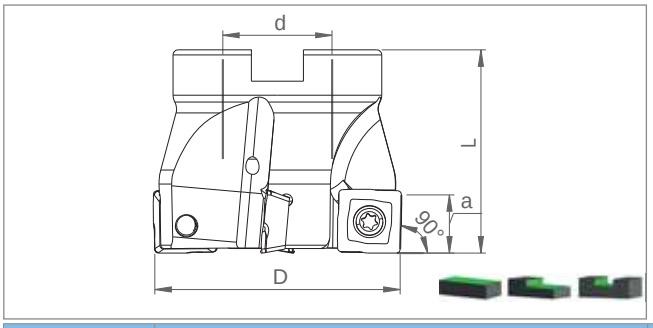

Ordering Code	Item Designation	Dimensions (mm)						Master Insert*
	TK90 SDMT 1205..		*D*	*Z*	*d*	*L*	*a*	
SM47013	TK90 SDMT12 D50 A22 Z04-H	✓	50	4	22	40	10	SDMT 1205..
SM47020	TK90 SDMT12 D63 A22 Z05-H	✓	63	5	22	40	10	
SM47037	TK90 SDMT12 D80 A27 Z06-H	✓	80	6	27	50	10	
SM47044	TK90 SDMT12 D100 A32 Z08-H	✓	100	8	32	50	10	
SM47051	TK90 SDMT12 D125 B40 Z09	-	125	9	40	63	10	

Size Designation	Master Insert*	Spare Parts		
		Screw	Torx Key	Screw Torque Value
				N·m
D50 - D125	SDMT 1205..	SSV M4x12-9515	STK-T15-9910	3,9

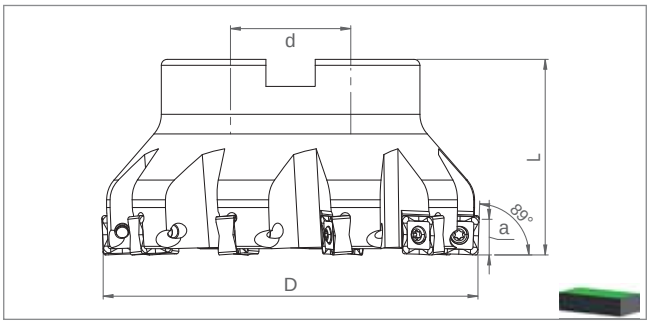

Ordering Code		Item Designation	Dimensions (mm)						Master Insert**
Direction		*TK89 SN.. 1206..*		*D*	*Z*	*d*	*L*	*a*	
Right	*Left*								
SM00562	-	TK89 SN12 D50 A22 Z04-H	✓	50	4	22	40	10	SN.. 1206..
SM28593	SM49659	TK89 SN12 D63 A22 Z06-H	✓	63	6	22	40	10	
SM28586	SM49666	TK89 SN12 D80 A27 Z07-H	✓	80	7	27	50	10	
SM28579	-	TK89 SN12 D100 A32 Z09-H	✓	100	9	32	50	10	
SM14619	-	TK89 SN12 D125 B40 Z10	-	125	10	40	63	10	
SM14602	-	TK89 SN12 D160 C40 Z11	-	160	11	40	63	10	
SM25271	-	TK89 SN12 D200 C60 Z14	-	200	14	60	63	10	

Cooling mounting screw is optional / See Page "526" for cooling mounting screws.
İçten su vermeli montaj vidaları opsiyoneldir. / Bkz. Sayfa "526" İçten su vermeli montaj vidaları için.

Size Designation	Master Insert**	Spare Parts		
		Screw***	Torx Key	Screw Torque Value
				N·m
D50 - D63	SN.. 1206..	SSV M4x12-9515	STK-T15-9910	3,9
D80 - D200		SSV M4x14-9516		

*Suitable Insert brand is PRMT
**Suitable Insert brand is ISO
***Use SSV M4x12x6-9517 screws for SNMX1205-WLTR brand inserts (Stock Code: SM29934)
SNMX1205-WLTR marka uçlar için SSV M4x12x6-9517 civata kullanınız (Stok Kodu: SM29934)

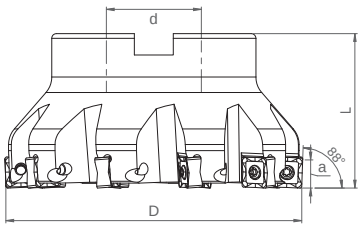

Ordering Code	Item Designation		Dimensions (mm)					Master Insert*
	TK88 SNMU 1305..		*D*	*Z*	*d*	*L*	*a*	
SM53137	TK88 SN1305 D50 A22 Z04-H	✓	50	4	22	40	5	SNMU 1305..
SM53144	TK88 SN1305 D50 A22 Z05-H	✓	50	5	22	40	5	
SM53151	TK88 SN1305 D63 A22 Z05-H	✓	63	5	22	40	5	
SM53168	TK88 SN1305 D63 A22 Z06-H	✓	63	6	22	40	5	
SM53175	TK88 SN1305 D80 A27 Z07-H	✓	80	7	27	50	5	
SM53182	TK88 SN1305 D80 A27 Z09-H	✓	80	9	27	50	5	
SM53199	TK88 SN1305 D100 A32 Z09-H	✓	100	9	32	50	5	
SM53205	TK88 SN1305 D100 A32 Z11-H	✓	100	11	32	50	5	
SM53212	TK88 SN1305 D125 B40 Z11	-	125	11	40	63	5	
SM53229	TK88 SN1305 D160 C40 Z13	-	160	13	40	63	5	

Cooling mounting screw is optional / See Page "526" for cooling mounting screws.
İçten su vermeli montaj vidaları opsiyoneldir. / Bkz. Sayfa "526" İçten su vermeli montaj vidaları için.

Size Designation	Master Insert*	Spare Parts		
		Screw	Torx Key	Screw Torque Value
D50 - D160	SNMU 1305..	SSV M4x12x5-9529	STK-T15-9910	3,9 N·m

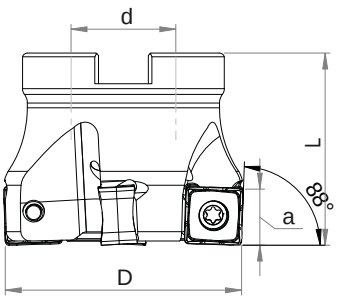

Ordering Code	Item Designation		Dimensions (mm)					Master Insert**
	TK88 SNMU 1206..		*D*	*Z*	*d*	*L*	*a*	
SM71773	TK88 SNMU12 D50 A22 Z05-H	✓	50	5	22	40	9.5	SNMU 1206..
SM71780	TK88 SNMU12 D63 A22 Z06-H	✓	63	6	22	40	9.5	
SM71797	TK88 SNMU12 D80 A27 Z07-H	✓	80	7	27	50	9.5	

Cooling mounting screw is optional / See Page "526" for cooling mounting screws.
İçten su vermeli montaj vidaları opsiyoneldir. / Bkz. Sayfa "526" İçten su vermeli montaj vidaları için.

Size Designation	Master Insert**	Spare Parts		
		Screw	Torx Key	Screw Torque Value
D50 - D63	SNMU 1206..	SSV M4x12-9515	STK-T15-9910	3,9 N·m

*Suitable Insert brand is KYCR
**Suitable Insert brand is TNGLY

SMOXH CUTTING TOOLS
Kalitenin Yükselen Gücü

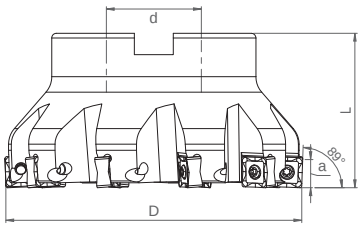

Ordering Code	Item Designation	Dimensions (mm)						Master Insert*
	TK89 SNMU 1305..PNTR		*D*	*Z*	*d*	*L*	*a*	
SM53359	TK89 SN13 D50 A22 Z04-H	✓	50	4	22	40	9	SNMU 1305.. PNTR
SM53366	TK89 SN13 D50 A22 Z05-H	✓	50	5	22	40	9	
SM53373	TK89 SN13 D63 A22 Z05-H	✓	63	5	22	40	9	
SM01668	TK89 SN13 D63 A22 Z07-H	✓	63	7	22	40	9	
SM53380	TK89 SN13 D80 A27 Z07-H	✓	80	7	27	50	9	
SM53397	TK89 SN13 D80 A27 Z09-H	✓	80	9	27	50	9	
SM53403	TK89 SN13 D100 A32 Z09-H	✓	100	9	32	50	9	
SM53410	TK89 SN13 D125 B40 Z11	-	125	11	40	63	9	

Size Designation	Master Insert*	Spare Parts		
		Screw	Torx Key	Screw Torque Value
				N·m
D50 - D125	SNMU 1305..	SSV M4x12x6-9517	STK-T15-9910	3,9

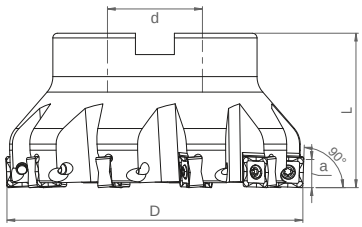

Ordering Code	Item Designation	Dimensions (mm)						Master Insert*
	TK90 SZMU 0804..		*D*	*Z*	*d*	*L*	*a*	
SM61378	TK90 SZ08 D40 A16 Z05-H	✓	40	5	16	40	5	SZMU 0804..
SM61385	TK90 SZ08 D50 A22 Z06-H	✓	50	6	22	40	5	
SM61392	TK90 SZ08 D63 A22 Z07-H	✓	63	7	22	40	5	
SM61408	TK90 SZ08 D80 A27 Z08-H	✓	80	8	27	50	5	

Cooling mounting screw is optional / See Page "526" for cooling mounting screws.
İçten su vermeli montaj vidaları opsiyoneldir. / Bkz. Sayfa "526" İçten su vermeli montaj vidaları için.

Size Designation	Master Insert*	Spare Parts		
		Screw	Torx Key	Screw Torque Value
				N·m
D50 - D80	SZMU 0804..	SSV M3x7-9527	STK-T08-9908	1,0

*Suitable Insert brand is ISC

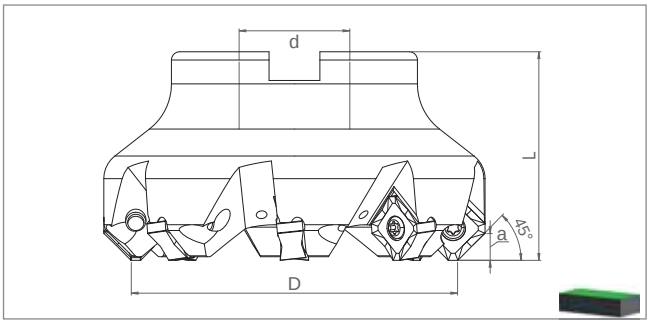

Ordering Code		Item Designation	Dimensions (mm)						Master Insert*
Direction		TK45 SN.. 1206..		D	Z	d	L	a	
Right	Left								
SM29071	SM49628	TK45 SN12 D50 A22 Z05-H	✓	50	5	22	40	6	SN.. 1206..
SM29064	SM49635	TK45 SN12 D63 A22 Z07-H	✓	63	7	22	40	6	
SM29040	SM49642	TK45 SN12 D80 A27 Z08-H	✓	80	8	27	50	6	
SM29033	-	TK45 SN12 D100 A32 Z10-H	✓	100	10	32	50	6	
SM62252	-	TK45 SN12 D125 A40 Z11-H	✓	125	11	40	63	6	
SM14862	-	TK45 SN12 D125 B40 Z11	-	125	11	40	63	6	
SM14879	-	TK45 SN12 D160 C40 Z12	-	160	12	40	63	6	
SM25226	-	TK45 SN12 D200 C60 Z14	-	200	14	60	63	6	
SM38424	-	TK45 SN12 D315 D60 Z20	-	315	20	60	63	6	

Cooling mounting screw is optional / See Page “526” for cooling mounting screws.
İçten su vermeli montaj vidaları opsiyoneldir. / Bkz. Sayfa “526” İçten su vermeli montaj vidaları için.

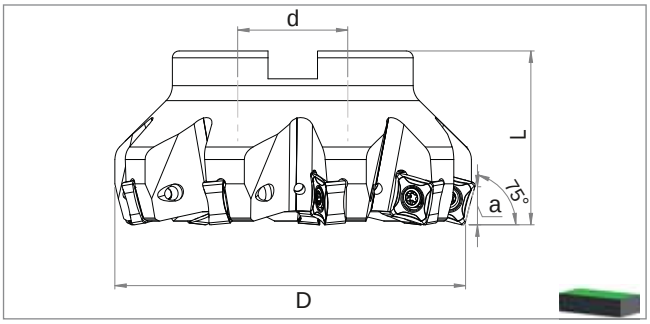

Ordering Code	Item Designation	Dimensions (mm)						Master Insert*
	TK75 SN.. 1206..		D	Z	d	L	a	
SM70509	TK75 SN12 D50 A22 Z05-H	✓	50	5	22	40	8	SN.. 1206..
SM70516	TK75 SN12 D63 A22 Z06-H	✓	63	6	22	40	8	
SM70523	TK75 SN12 D80 A27 Z07-H	✓	80	7	27	50	8	
SM62269	TK75 SN12 D100 A32 Z09-H	✓	100	9	32	50	8	
SM62276	TK75 SN12 D125 A40 Z10-H	✓	125	10	40	63	8	

Size Designation	Master Insert*	Spare Parts		
		Screw **	Torx Key	Screw Torque Value
D50 - D63	SN.. 1206..	SSV M4x12-9515	STK-T15-9910	3,9
D80 - D315		SSV M4x14-9516		

*Suitable Insert brand is ISO
**Use SSV M4x12x6-9517 screws for SNMX1205-WLTR brand inserts (Stock Code: SM29934)
SNMX1205-WLTR marka uçlar için SSV M4x12x6-9517 civata kullanınız (Stok Kodu: SM29934)

SMOXH® CUTTING TOOLS
Kalitenin Yükselen Gücü

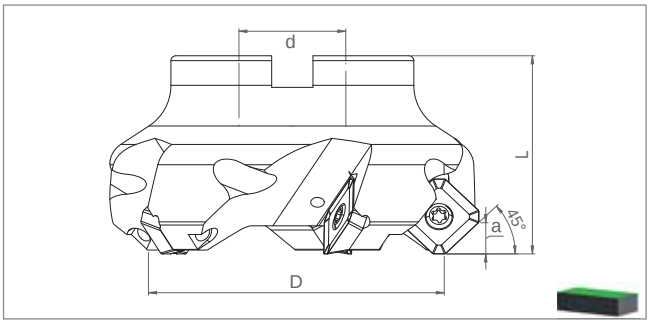

Ordering Code	Item Designation	Dimensions (mm)						Master Insert*
TK45 R245.12T3.. / SE..12T3			*D*	*Z*	*d*	*L*	*a*	
SM28982	TK45 SE12 D50 A22 Z04-H	✓	50	4	22	40	6	R245.12T3.. SE..12T3
SM28975	TK45 SE12 D63 A22 Z05-H	✓	63	5	22	40	6	
SM53106	TK45 SE12 D63 A22 Z06-H	✓	63	6	22	40	6	
SM28968	TK45 SE12 D80 A27 Z06-H	✓	80	6	27	50	6	
SM53113	TK45 SE12 D80 A27 Z08-H	✓	80	8	27	50	6	
SM40182	TK45 SE12 D80 A27 Z09-H	✓	80	9	27	50	6	
SM28951	TK45 SE12 D100 A32 Z07-H	✓	100	7	32	50	6	
SM14800	TK45 SE12 D125 B40 Z08	-	125	8	40	63	6	
SM14817	TK45 SE12 D160 C40 Z10	-	160	10	40	63	6	

Cooling mounting screw is optional / See Page “526” for cooling mounting screws.
İçten su vermeli montaj vidaları opsiyoneldir. / Bkz. Sayfa “526” İçten su vermeli montaj vidaları için.

Size Designation	Master Insert* *	Spare Parts		
		Screw	Torx Key	Screw Torque Value
				N·m
D50 - D160	R245.12T3.. SE..12T3..	SSV M3.5x10-9511	STK-T15-9910	2,7

*Suitable Insert brand is ZCC-CT

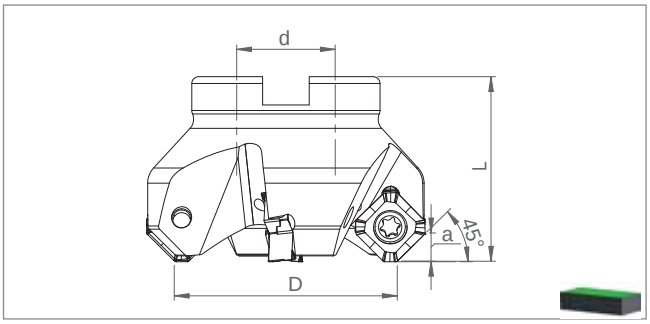

Ordering Code	Item Designation		Dimensions (mm)					Master Insert*
	TK45 SNMU 1305.. / ONHU 0505.. / RXMT 1607.. / OXMT0507..		*D*	*Z*	*d*	*L*	*a*	
SM65000	TK45 SN1305 D50 A22 Z05-H	✓	47.65	5	22	40	6	SNMU 1305..
SM65017	TK45 SN1305 D63 A22 Z06-H	✓	60.65	6	22	40	6	
SM65024	TK45 SN1305 D80 A27 Z07-H	✓	77.65	7	27	50	6	
SM65031	TK45 SN1305 D100 A32 Z09-H	✓	97.65	9	32	50	6	

*ONHU 0505.... (44)**

D	*Z*	*d*	*L*	*a*	
50	5	22	40	6	ONHU 0505..
63	6	22	40	6	
80	7	27	50	6	
100	9	32	50	6	

RXMT 1607.. (R)

D	*Z*	*d*	*L*	*a*	
45.4	5	22	40	6	RXMT 1607..
58.4	6	22	40	6	
65.4	7	27	50	6	
90.4	9	32	50	6	

OXMT 0507R08.. (R)

D	*Z*	*d*	*L*	*a*	
44.5	5	22	40	6	OXMT 0507..
58.4	6	22	40	6	
65.4	7	27	50	6	
90.4	9	32	50	6	

*OXMT 050705 (R)**

D	*Z*	*d*	*L*	*a*	
50	5	22	40	6	OXMT 0507..
63	6	22	40	6	
80	7	27	50	6	
100	9	32	50	6	

Cooling mounting screw is optional / See Page "526" for cooling mounting screws.
İçten su vermeli montaj vidaları opsiyoneldir. / Bkz. Sayfa "526" İçten su vermeli montaj vidaları için.

Size Designation	Master Insert*	Spare Parts		
		Screw	Torx Key	Screw Torque Value N·m
D50 - D100	SNMU 1305..	SSV M4x12x6-9517	STK-T15-9910	3,9

*Suitable Insert brand is ISC

SMOXH CUTTING TOOLS
Kalitenin Yükselen Gücü

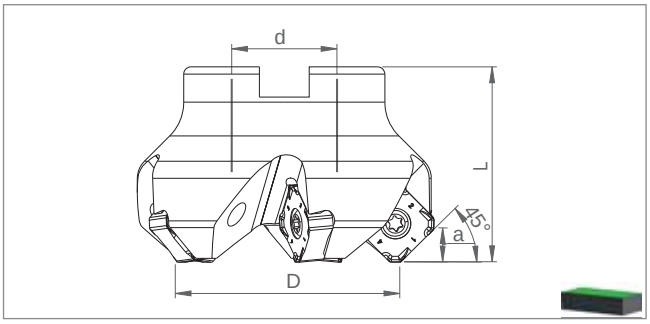

Ordering Code	Item Designation	Dimensions (mm)						Master Insert*
	TK45 R345-13..		*D*	*Z*	*d*	*L*	*a*	
SM46269	TK45 R345-13 D50 A22 Z05-H	✓	50	5	22	40	6	R345-13..
SM46276	TK45 R345-13 D63 A22 Z06-H	✓	63	6	22	40	6	
SM46283	TK45 R345-13 D80 A27 Z07-H	✓	80	7	27	50	6	
SM46290	TK45 R345-13 D100 A32 Z09-H	✓	100	9	32	50	6	

Size Designation	Master Insert*	Spare Parts		
		Screw	Torx Key	Screw Torque Value
				N·m
D50 - D100	R345-13..	SSV M4x14-9516	STK-T15-9910	3,9

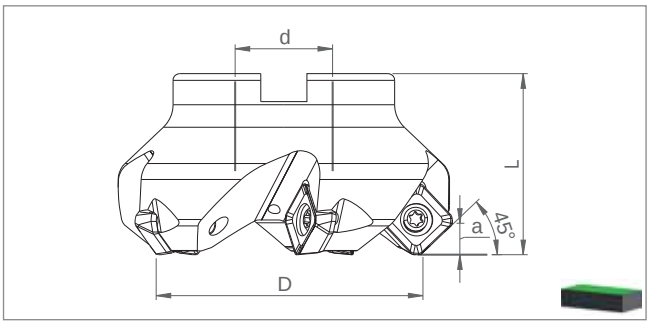

Ordering Code	Item Designation	Dimensions (mm)						Master Insert*
	TK45 SNMT 1205..		*D*	*Z*	*d*	*L*	*a*	
SM46498	TK45 SNMT12 D50 A22 Z04-H	✓	50	4	22	40	6.5	SNMT 1205..
SM46504	TK45 SNMT12 D63 A22 Z05-H	✓	63	5	22	40	6.5	
SM46511	TK45 SNMT12 D80 A27 Z06-H	✓	80	6	27	50	6.5	
SM46528	TK45 SNMT12 D100 A32 Z07-H	✓	100	7	32	50	6.5	
SM46535	TK45 SNMT12 D125 B40 Z08	-	125	8	40	63	6.5	
SM46542	TK45 SNMT12 D160 C40 Z10	-	160	10	40	63	6.5	

Cooling mounting screw is optional / See Page "526" for cooling mounting screws.
İçten su vermeli montaj vidaları opsiyoneldir. / Bkz. Sayfa "526" İçten su vermeli montaj vidaları için.

Size Designation	Master Insert*	Spare Parts		
		Screw	Torx Key	Screw Torque Value
				N·m
D50 - D160	SNMT 1205..	SSV M4x12x6-9517	STK-T15-9910	3,9

*Suitable Insert brand is SNDVK
**Suitable Insert brand is PRMT

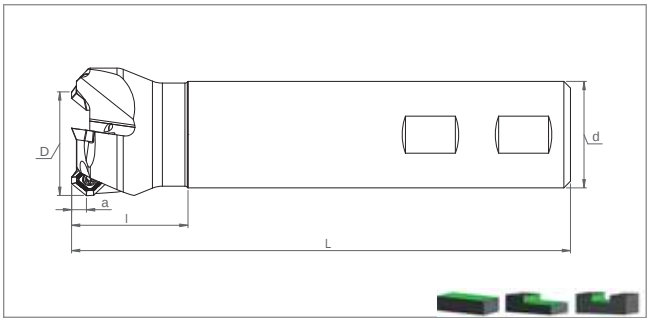

Ordering Code	Item Designation	Dimensions (mm)							Master Insert*
	ST45 SEET 0903..		*D*	*d*	*Z*	*L*	*l*	*a*	
SM59085	ST45 SE0903 D25 W25 L150 Z02-H	✓	25	25	2	150	40	4	SEET 0903..
SM59092	ST45 SE0903 D32 W32 L150 Z03-H	✓	32	32	3	150	40	4	
SM59108	ST45 SE0903 D35 W32 L150 Z03-H	✓	35	32	3	150	40	4	
SM59115	ST45 SE0903 D40 W32 L150 Z04-H	✓	40	32	4	150	40	4	

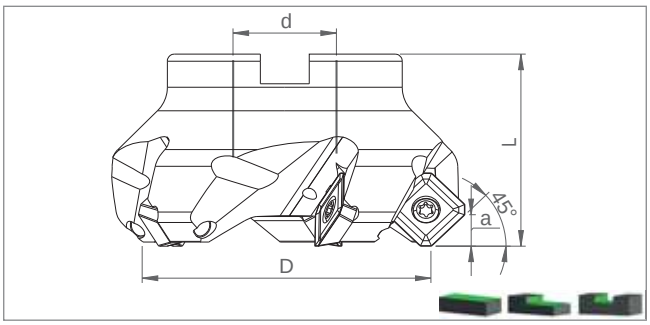

Ordering Code	Item Designation	Dimensions (mm)						Master Insert*
	TK45 SEET 0903.. / SE..14M4..		*D*	*Z*	*d*	*L*	*a*	
SM54356	TK45 SE0903 D40 A16 Z04-H	✓	40	4	16	40	4	SEET 0903..
SM54363	TK45 SE0903 D50 A22 Z05-H	✓	50	5	22	40	4	
SM54370	TK45 SE0903 D63 A22 Z06-H	✓	63	6	22	40	4	
SM54387	TK45 SE0903 D80 A27 Z08-H	✓	80	8	27	50	4	
SM53274	TK45 SE14 D50 A22 Z04-H	✓	50	4	22	40	6.5	SE.. 14M4..
SM53281	TK45 SE14 D63 A22 Z05-H	✓	63	5	22	40	6.5	
SM53298	TK45 SE14 D80 A27 Z06-H	✓	80	6	27	50	6.5	
SM53304	TK45 SE14 D100 A32 Z07-H	✓	100	7	32	50	6.5	
SM53311	TK45 SE14 D125 B40 Z08	-	125	8	40	63	6.5	

Cooling mounting screw is optional / See Page "526" for cooling mounting screws.
İçten su vermeli montaj vidaları opsiyoneldir. / Bkz. Sayfa "526" İçten su vermeli montaj vidaları için.

Size Designation	Master Insert*	Spare Parts		
		Screw	Torx Key	Screw Torque Value
				N·m
D25 - D80	SEET 0903..	SSV M3x8-9508	STK-T08-9908	1,9
D50 - D125	SE.. 14M4	SSV M4x10-9514	STK-T15-9910	3,9

*Suitable Insert brand is KRLY

SMOXH® CUTTING TOOLS
Kalitenin Yükselen Gücü

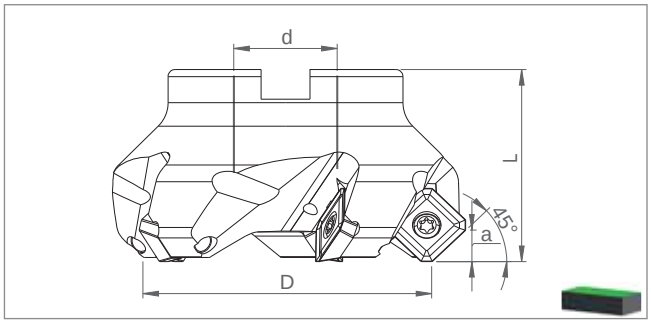

Ordering Code	Item Designation	Dimensions (mm)						Master Insert*
	TK45 SEMT 13T3..		*D*	*Z*	*d*	*L*	*a*	
SM45392	TK45 SE13 D50 A22 Z04-H	✓	50	4	22	40	6	SEMT 13T3..
SM45408	TK45 SE13 D63 A22 Z05-H	✓	63	5	22	40	6	
SM50082	TK45 SE13 D80 A27 Z06-H	✓	80	6	27	50	6	

Cooling mounting screw is optional / See Page "526" for cooling mounting screws.
İçten su vermeli montaj vidaları opsiyoneldir. / Bkz. Sayfa "526" İçten su vermeli montaj vidaları için.

Size Designation	Master Insert**	Spare Parts		
		Screw	Torx Key	Screw Torque Value
				N·m
D50 - D80	SEMT 13T3..	SSV M4x12-9515	STK-T15-9910	3,9

*Suitable Insert brand is SMTM

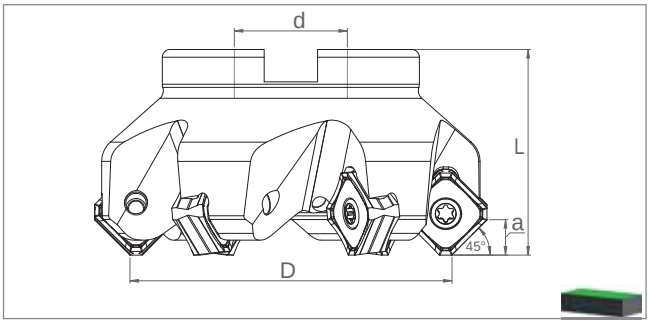

Ordering Code	Item Designation		Dimensions (mm)					Master Insert*
	TK45 SNMU 1307.. /ONMU 0507../RNMU 1307.. (R)		*D*	*Z*	*d*	*L*	*a*	
SM00289	TK45 SN1307 D63 A22 Z06-H	✓	63	6	22	40	6	SNMU 1307..
SM00290	TK45 SN1307 D80 A27 Z08-H	✓	80	8	27	50	6	
SM00291	TK45 SN1307 D100 A32 Z08-H	✓	100	8	32	50	6	
SM76754	**TK45 SN1307 D125 A40 Z10**	✓	**125**	**10**	**40**	**63**	**6**	

*ONMU 0507.. (45)**					
D	*Z*	*d*	*L*	*a*	
66	6	22	38.5	3.40	ONMU 0507..
83	8	27	48.5	3.40	
103	8	32	48.5	3.40	

*RNMU 1307.. (R)**					
D	*Z*	*d*	*L*	*a*	
61.7	6	22	38.5	6	RNMU 1307..
78.7	8	27	48.5	6	
98.7	8	32	48.5	6	

Cooling mounting screw is optional / See Page "526" for cooling mounting screws.
İçten su vermeli montaj vidaları opsiyoneldir. / Bkz. Sayfa "526" İçten su vermeli montaj vidaları için.

Size Designation	Master Insert*	Spare Parts		
		Screw	Torx Key	Screw Torque Value
D63 - D125	SNMU 1305.. ONMU 0705.. RNMU 1307..	SSV M4x12x5-9529	STK-T15-9910	3,9

*Suitable Insert brand is TNGLY

SMOXH CUTTING TOOLS
Kalitenin Yükselen Gücü

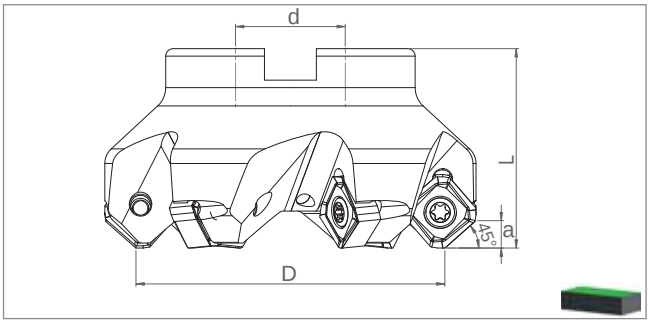

Ordering Code	Item Designation		Dimensions (mm)					Master Insert*
	TK45 SNEG 1205..		*D*	*Z*	*d*	*L*	*a*	
SM54158	TK45 SNEG12 D50 A22 Z05-H	✓	50	5	22	40	7	SNEG 1205..
SM54165	TK45 SNEG12 D63 A22 Z06-H	✓	63	6	22	40	7	
SM54172	TK45 SNEG12 D80 A27 Z07-H	✓	80	7	27	50	7	
SM54189	TK45 SNEG12 D100 A32 Z09-H	✓	100	9	32	50	7	
SM54196	TK45 SNEG12 D125 B40 Z11	-	125	11	40	63	7	
SM54202	TK45 SNEG19 D160 C40 Z12	-	160	12	40	63	7	

Cooling mounting screw is optional / See Page "526" for cooling mounting screws.
İçten su vermeli montaj vidaları opsiyoneldir. / Bkz. Sayfa "526" İçten su vermeli montaj vidaları için.

Size Designation	Master Insert*	Spare Parts		
		Screw	Torx Key	Screw Torque Value
				N·m
D50 - D160	SNEG 1205..	SSV M3.5x10-9511	STK-T15-9910	1,9

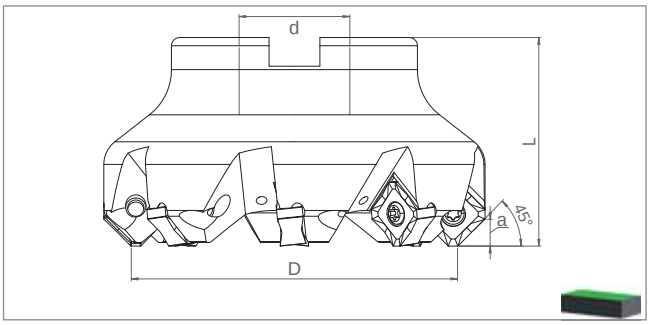

Ordering Code	Item Designation		Dimensions (mm)					Master Insert*
	TK45 SN.X 1306..		*D*	*Z*	*d*	*L*	*a*	
SM54219	TK45 SN1306 D50 A22 Z04-H	✓	50	4	22	40	7	SN.X 1306..
SM54226	TK45 SN1306 D63 A22 Z05-H	✓	63	5	22	40	7	
SM54233	TK45 SN1306 D80 A27 Z06-H	✓	80	6	27	50	7	

Cooling mounting screw is optional / See Page "526" for cooling mounting screws.
İçten su vermeli montaj vidaları opsiyoneldir. / Bkz. Sayfa "526" İçten su vermeli montaj vidaları için.

Size Designation	Master Insert**	Spare Parts		
		Screw	Torx Key	Screw Torque Value
				N·m
D50 - D80	SN.X 1306..	SSV M4x12-9515	STK-T15-9910	3,9

*Suitable Insert brand is ZCC-CT
**Suitable Insert brand is TGTC

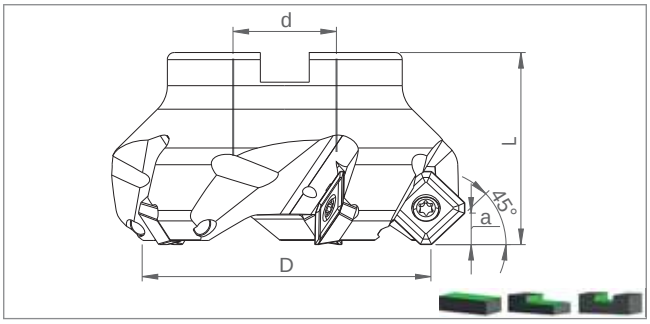

Ordering Code	Item Designation	Dimensions (mm)						Master Insert*
	TK45 SEGT / SEKT 12T3..		*D*	*Z*	*d*	*L*	*a*	
SM70240	TK45 SEKT12T3 D50 A22 Z04-H	✓	50	4	22	40	6	SEGT / SEKT 12T3..
SM70257	TK45 SEKT12T3 D63 A22 Z05-H	✓	63	5	22	40	6	
SM70264	TK45 SEKT12T3 D80 A27 Z06-H	✓	80	6	27	50	6	
SM70271	TK45 SEKT12T3 D100 A27 Z07-H	✓	100	7	27	50	6	

Size Designation	Master Insert*	Spare Parts		
		Screw	Torx Key	Screw Torque Value
				N·m
D50 - D100	SEGT / SEKT 12T3..	SSV M3.5x10-9511	STK-T15-9910	2,7

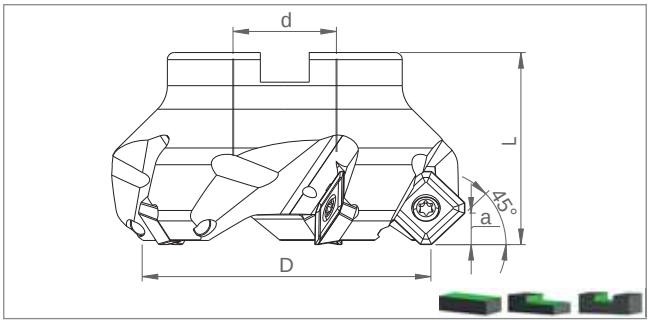

Ordering Code	Item Designation	Dimensions (mm)						Master Insert*
	TK45 SEMT 13T3..		*D*	*Z*	*d*	*L*	*a*	
SM70288	TK45 SEMT13T3 D50 A22 Z04-H	✓	50	4	22	40	6	SEMT 13T3AG
SM70295	TK45 SEMT13T3 D63 A22 Z05-H	✓	63	5	22	40	6	
SM70301	TK45 SEMT13T3 D80 A27 Z06-H	✓	80	6	27	50	6	
SM70318	TK45 SEMT13T3 D100 A27 Z07-H	✓	100	7	27	50	6	

Size Designation	Master Insert*	Spare Parts		
		Screw	Torx Key	Screw Torque Value
				N·m
D50 - D100	SEMT 13T3AG	SSV M3.5x10-9511	STK-T15-9910	2,7

Cooling mounting screw is optional / See Page “526” for cooling mounting screws.
İçten su vermeli montaj vidaları opsiyoneldir. / Bkz. Sayfa “526” İçten su vermeli montaj vidaları için.

*Suitable Insert brand is YG-1

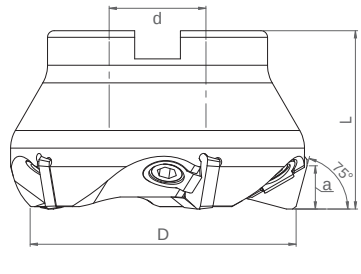

Ordering Code	Item Designation	Dimensions (mm)						Master Insert*
	TK75 SPKN 1203..		*D*	*Z*	*d*	*L*	*a*	
SM32675	TK75 SP12 D50 A22 Z04	-	50	4	22	40	9.5	SPKN 1203..
SM32682	TK75 SP12 D63 A22 Z05	-	63	5	22	40	9.5	
SM32705	TK75 SP12 D80 A27 Z06	-	80	6	27	50	9.5	
SM32729	TK75 SP12 D100 A32 Z07	-	100	7	32	50	9.5	
SM32743	TK75 SP12 D125 B40 Z08	-	125	8	40	63	9.5	
SM38547	TK75 SP12 D160 C40 Z09	-	160	9	40	63	9.5	
SM32750	TK75 SP12 D200 C60 Z12	-	200	12	60	63	9.5	
SM38530	TK75 SP12 D315 D60 Z18	-	315	18	60	63	9.5	

Size Designation	Master Insert*	Spare Parts		
		Clamp Part	Screw	Allen Key
D50 - D315	SPKN.. 1203..	TKBP 9116	TKSV M8x1x18 9227	SAK-AA5-9904

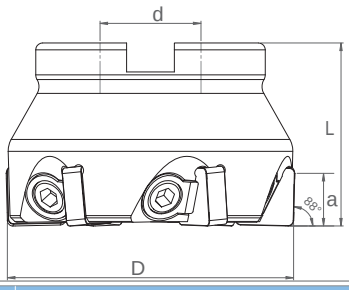

Ordering Code	Item Designation	Dimensions (mm)						Master Insert**
	TK88 SNGN 1204..		*D*	*Z*	*d*	*L*	*a*	
SM53328	TK88 SN1204 D63 A22 Z06	-	63	6	22	40	11	SNGN 1204..
SM53335	TK88 SN1204 D80 A27 Z07	-	80	7	27	50	11	
SM61569	TK88 SN1204 D80 A27 Z08	-	80	8	27	50	11	
SM53342	TK88 SN1204 D100 A32 Z08	-	100	8	32	50	11	

Size Designation	Master Insert**	Spare Parts		
		Clamp Part	Screw	Allen Key
D63 - D100	SNGN 1204..	TKBP 9116	TKSV M8x1x18 9227	SAK-AA5-9904

*Suitable Insert brand is ISO
**Suitable Insert brand is KYCR

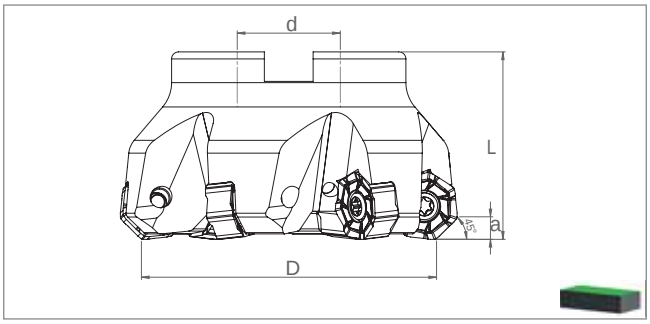

Ordering Code	Item Designation	Dimensions (mm)						Master Insert*
	TK45 XNMU 0605.. / 0906..		*D*	*Z*	*d*	*L*	*a*	
SM55209	TK45 XN06 D50 A22 Z05-H	✓	50	5	22	40	3.5	XNMU 0605..
SM55216	TK45 XN06 D63 A22 Z06-H	✓	63	6	22	40	3.5	
SM55223	TK45 XN06 D80 A27 Z08-H	✓	80	8	27	50	3.5	
SM55230	TK45 XN06 D100 A32 Z09-H	✓	100	9	32	50	3.5	
SM55308	TK45 XN09 D63 A22 Z05-H	✓	63	5	22	40	5	XNMU 0906..
SM55315	TK45 XN09 D80 A27 Z06-H	✓	80	6	27	50	5	
SM55322	TK45 XN09 D100 A32 Z08-H	✓	100	8	32	50	5	
SM55339	TK45 XN09 D125 B40 Z10	-	125	10	40	63	5	
SM63907	TK45 XN09 D160 C40 Z10	✓	160	10	40	63		

Size Designation	Master Insert*	Spare Parts		
		Screw	Torx Key	Screw Torque Value
				N·m
D50 - D100	XNMU 0605..	SSV M4x12-9515	STK-T15-9910	3,9
D63 - D160	XNMU 0906..	SSV M5x13-9519	STK-T20-9911	5,5

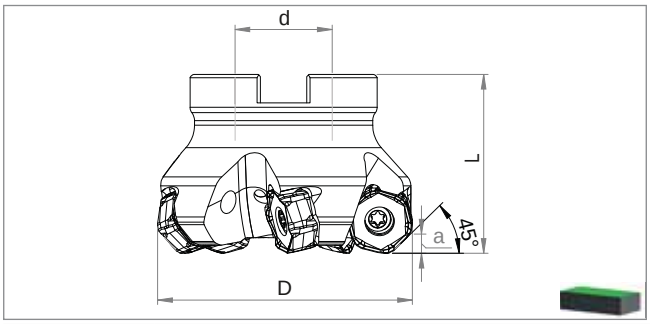

Ordering Code	Item Designation	Dimensions (mm)						Master Insert*
	TK45 HXKU 0605..		*D*	*Z*	*d*	*L*	*a*	
SM71315	TK45 HX06 D50 A22 Z05-H	✓	50	5	22	40	3.5	HXKU 0605..
SM71322	TK45 HX06 D63 A22 Z07-H	✓	63	6	22	40	3.5	
SM71339	TK45 HX06 D80 A27 Z08-H	✓	80	8	27	50	3.5	
SM71346	TK45 HX06 D100 A32 Z10-H	✓	63	6	22	50	3.5	

Size Designation	Master Insert*	Spare Parts		
		Screw	Torx Key	Screw Torque Value
				N·m
D50 - D100	HXKU 0605..	SSV M4x10-9514	STK-T15-9910	3,9

*Suitable Insert brand is TGTC

SMOXH CUTTING TOOLS
Kalitenin Yükselen Gücü

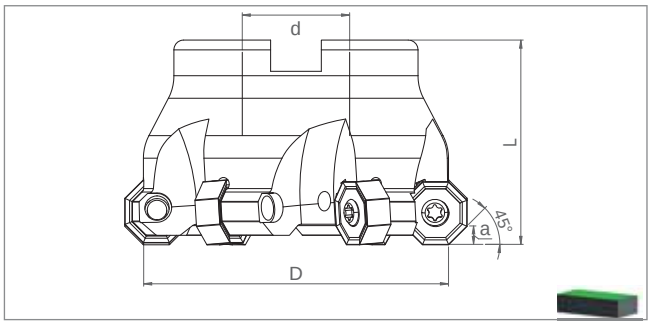

Ordering Code	Item Designation	Dimensions (mm)						Master Insert*
TK45 ON.X 0606..			*D*	*Z*	*d*	*L*	*a*	
SM32453	TK45 ON06 D63 A22 Z05-H	✓	63	5	22	40	4	ON.X 0606..
SM32477	TK45 ON06 D80 A27 Z06-H	✓	80	6	27	50	4	
SM24588	TK45 ON06 D100 A32 Z07-H	✓	100	7	32	50	4	
SM32507	TK45 ON06 D125 B40 Z08	-	125	8	40	63	4	

Cooling mounting screw is optional / See Page "526" for cooling mounting screws.
İçten su vermeli montaj vidaları opsiyoneldir. / Bkz. Sayfa "526" İçten su vermeli montaj vidaları için.

Size Designation	Master Insert*	Spare Parts		
		Screw	Torx Key	Screw Torque Value
				N·m
D63 - D125	ON.X 0606..	SSV M5x13-9519	STK-T20-9911	5,5

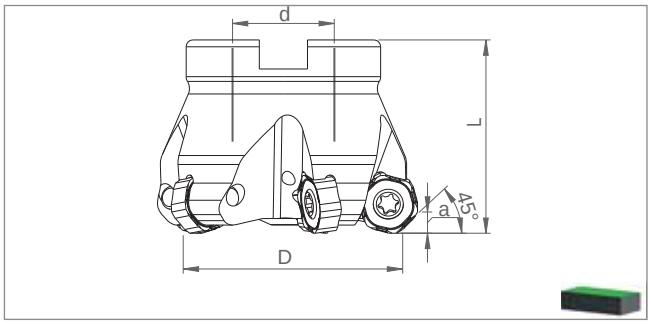

Ordering Code	Item Designation	Dimensions (mm)						Master Insert*
TK45 HNKX 0604..			*D*	*Z*	*d*	*L*	*a*	
SM46702	TK45 HNKX06 D50 A22 Z05-H	✓	50	5	22	40	3.5	HNKX 0604..
SM46719	TK45 HNKX06 D63 A22 Z06-H	✓	63	6	22	40	3.5	
SM46726	TK45 HNKX06 D80 A27 Z08-H	✓	80	8	27	50	3.5	

Size Designation	Master Insert**	Spare Parts		
		Screw	Torx Key	Screw Torque Value
				N·m
D50 - D80	HNKX 0604..	SSV M4x12-9515	STK-T15-9910	3,9

*Suitable Insert brand is KRLY
**Suitable Insert brand is LMN

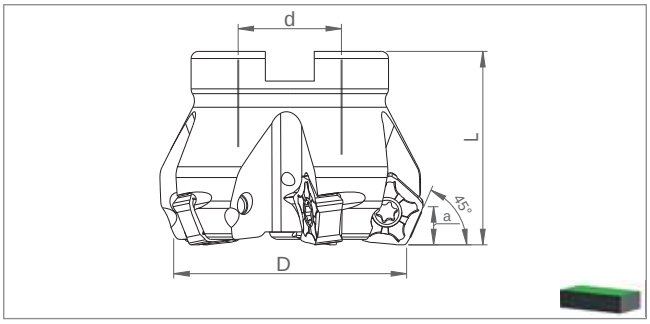

Ordering Code	Item Designation		Dimensions (mm)					Master Insert*
	TK45 PNMU 1205..		*D*	*Z*	*d*	*L*	*a*	
SM46894	TK45 PN12 D63 A22 Z05-H	✓	63	5	22	40	6	PNMU 1205..
SM46900	TK45 PN12 D80 A27 Z07-H	✓	80	7	27	50	6	
SM46917	TK45 PN12 D100 A32 Z09-H	✓	100	9	32	50	6	
SM46924	TK45 PN12 D125 B40 Z11	-	125	11	40	63	6	

Cooling mounting screw is optional / See Page "526" for cooling mounting screws.
İçten su vermeli montaj vidaları opsiyoneldir. / Bkz. Sayfa "526" İçten su vermeli montaj vidaları için.

Size Designation	Master Insert*	Spare Parts		
		Screw	Torx Key	Screw Torque Value
				N·m
D63 - D125	PNMU 1205..	SSV M5x13-9519	STK-T20-9911	5,5

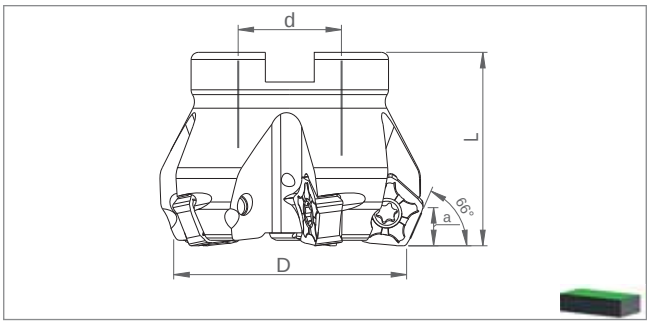

Ordering Code		Item Designation		Dimensions (mm)					Master Insert*
Direction		*TK66 PNMU 0905..*		*D*	*Z*	*d*	*L*	*a*	
Right	*Left*								
SM46931	SM72138	TK66R/L PN09 D50 A22 Z05-H	✓	50	5	22	40	6	PNMU 0905..
SM46948	SM72145	TK66R/L PN09 D63 A22 Z06-H	✓	63	6	22	40	6	
SM46955	SM72152	TK66R/L PN09 D80 A27 Z08-H	✓	80	8	27	50	6	
SM46962	-	TK66R PN09 D100 A32 Z10-H	✓	100	10	32	50	6	
SM46979	-	TK66R PN09 D125 B40 Z12	-	125	12	40	63	6	

Cooling mounting screw is optional / See Page "526" for cooling mounting screws.
İçten su vermeli montaj vidaları opsiyoneldir. / Bkz. Sayfa "526" İçten su vermeli montaj vidaları için.

Size Designation	Master Insert*	Spare Parts		
		Screw	Torx Key	Screw Torque Value
				N·m
D50- D125	PNMU 0905..	SSV M4x12x5-9529	STK-T15-9910	3,9

*Suitable Insert brand is KYCR

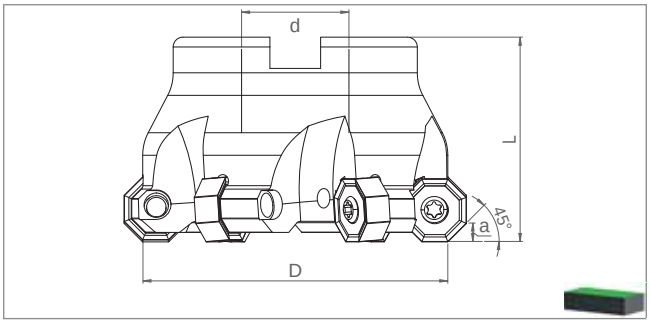

Ordering Code	Item Designation		Dimensions (mm)					Master Insert*
TK45 ON.X 0806..			*D*	*Z*	*d*	*L*	*a*	
SM28722	TK45 ON08 D63 A22 Z05-H	✓	63	5	22	40	5.5	ON.X 0806..
SM28715	TK45 ON08 D80 A27 Z06-H	✓	80	6	27	50	5.5	
SM28708	TK45 ON08 D100 A32 Z07-H	✓	100	7	32	50	5.5	
SM14695	TK45 ON08 D125 B40 Z08	-	125	8	40	63	5.5	
SM14718	TK45 ON08 D160 C40 Z10	-	160	10	40	63	5.5	
SM25219	TK45 ON08 D200 C60 Z12	-	200	12	60	63	5.5	

Size Designation	Master Insert*	Spare Parts		
		Screw	Torx Key	Screw Torque Value
				N·m
D63 - D200	ON.X 0806..	SSV M5x13-9519	STK-T20-9911	5,5

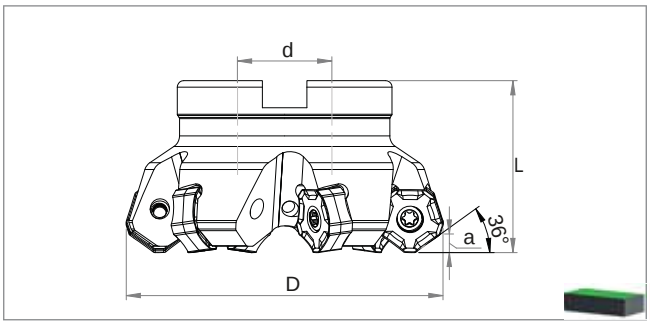

Ordering Code	Item Designation		Dimensions (mm)					Master Insert**
TK36 PNMU 1206..			*D*	*Z*	*d*	*L*	*a*	
SM70141	TK36 PNMU1206 D50 A22 Z04-H	✓	50	4	22	40	4	PNMU 1206..
SM70158	TK36 PNMU1206 D50 A22 Z05-H	✓	50	5	22	40	4	
SM70165	TK36 PNMU1206 D63 A22 Z05-H	✓	63	5	22	40	4	
SM64751	TK36 PNMU1206 D63 A22 Z06-H	✓	63	6	22	40	4	
SM64768	TK36 PNMU1206 D80 A27 Z08-H	✓	80	8	27	50	4	
SM64775	TK36 PNMU1206 D100 A32 Z10-H	✓	100	10	32	50	4	
SM64782	TK36 PNMU1206 D125 B40 Z12	-	125	12	40	63	4	
SM64799	TK36 PNMU1206 D160 C40 Z12	-	160	12	40	63	4	

Size Designation	Master Insert**	Spare Parts		
		Screw	Torx Key	Screw Torque Value
				N·m
D63 - D200	PNMU 1206..	SSV M4x10-9514	STK-T15-9910	3,9

Cooling mounting screw is optional / See Page "526" for cooling mounting screws.
İçten su vermeli montaj vidaları opsiyoneldir. / Bkz. Sayfa "526" İçten su vermeli montaj vidaları için.

*Suitable Insert brand is ISO
**Suitable Insert brand is YG-1

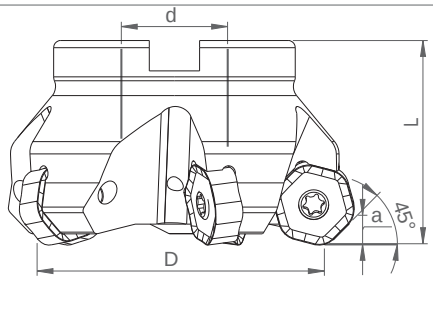

Ordering Code	Item Designation	Dimensions (mm)						Master Insert
	TK45 HN.J 0604.. / 0704.. / 0905..		*D*	*Z*	*d*	*L*	*a*	
SM40588	TK45 HN0604 D50 A22 Z05-H	✓	50	5	22	40	3.23	HN.J 0604..[1]
SM42841	TK45 HN0604 D63 A22 Z06-H	✓	63	6	22	40	3.23	
SM42858	TK45 HN0604 D80 A27 Z07-H	✓	80	7	27	50	3.23	
SM44043	TK45 HN0704 D50 A22 Z05-H	✓	50	5	22	40	3.5	HN.J 0704..[2]
SM44050	TK45 HN0704 D63 A22 Z06-H	✓	63	6	22	40	3.5	
SM44067	TK45 HN0704 D80 A27 Z08-H	✓	80	8	27	50	3.5	
SM42933	TK45 HN0905 D50 A22 Z04-H	✓	50	4	22	40	4.5	HN.J 0905..[3]
SM42940	TK45 HN0905 D63 A22 Z05-H	✓	63	5	22	40	4.5	
SM42957	TK45 HN0905 D80 A27 Z06-H	✓	80	6	27	50	4.5	
SM42964	TK45 HN0905 D100 A32 Z08-H	✓	100	8	32	50	4.5	
SM42971	TK45 HN0905 D125 B40 Z10	-	125	10	40	63	4.5	
SM42988	TK45 HN0905 D160 C40 Z12	-	160	12	40	63	4.5	

Size Designation	Master Insert*	Spare Parts		
		Screw	Torx Key	Screw Torque Value
				N·m
D50 - D80	HN.J 0604..*	SSV M4x12-9515	STK-T15-9910	3,9
D50 - D80	HN.J 0704..**	SSV M4x9x5-9528		
D50 - D160	HN.J 0905..***	SSV M4x12-9515		

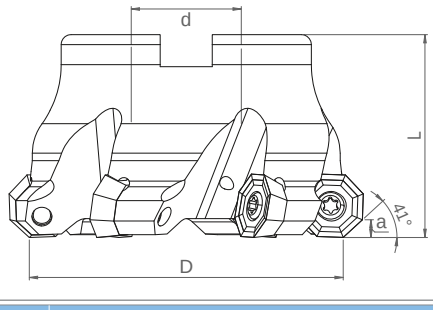

Ordering Code	Item Designation	Dimensions (mm)						Master Insert[4]
	TK41 OW.T 05T3..		*D*	*Z*	*d*	*L*	*a*	
SM61620	TK41 OW05 D50 A22 Z04-H	✓	50	4	22	40	3	OWMT / OWHT 05T3..
SM61637	TK41 OW05 D63 A22 Z05-H	✓	63	5	22	40	3	
SM61644	TK41 OW05 D80 A22 Z07-H	✓	80	7	27	50	3	

Size Designation	Master Insert[4]	Spare Parts		
		Screw	Torx Key	Screw Torque Value
				N·m
D50 - D80	OWMT /OWHT 05T3..	SSV M4x10-9514	STK-T15-9910	3,9

Cooling mounting screw is optional / See Page "526" for cooling mounting screws.
İçten su vermeli montaj vidaları opsiyoneldir. / Bkz. Sayfa "526" İçten su vermeli montaj vidaları için.

[1]Suitable Insert brand is KNMTL
[2]Suitable Insert brand is WDA
[3]Suitable Insert brand is KNMTL/WDA
[4]Suitable Insert brand is TNGLY

SMOXH® CUTTING TOOLS
Kalitenin Yükselen Gücü

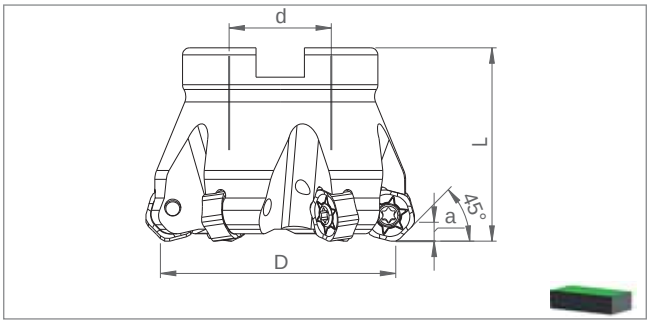

Ordering Code	Item Designation	Dimensions (mm)						Master Insert*
	TK45 HNGX 0604.. / 0906..		*D*	*Z*	*d*	*L*	*a*	
SM42742	TK45 HN06 D50 A22 Z05-H	✓	50	5	22	40	3	HNGX 0604..
SM40519	TK45 HN06 D63 A22 Z06-H	✓	63	6	22	40	3	
SM40526	TK45 HN06 D80 A27 Z07-H	✓	80	7	27	50	3	
SM40533	TK45 HN06 D100 A32 Z08-H	✓	100	8	32	50	3	
SM42896	TK45 HN09 D63 A22 Z05-H	✓	63	5	22	40	5	HNGX 0906..
SM40540	TK45 HN09 D80 A27 Z06-H	✓	80	6	27	50	5	
SM40557	TK45 HN09 D100 A32 Z08-H	✓	100	8	32	50	5	
SM40564	TK45 HN09 D125 B40 Z10	-	125	10	40	63	5	
SM40571	TK45 HN09 D160 C40 Z12	-	160	12	40	63	5	

Size Designation	Master Insert*	Spare Parts		
		Screw	Torx Key	Screw Torque Value
				N·m
D50 - D100	HNGX 0604..	SSV M3x8-9508	STK-T08-9908	1,9
D63 - D160	HNGX 0906..	SSV M4x12-9515	STK-T15-9910	3,9

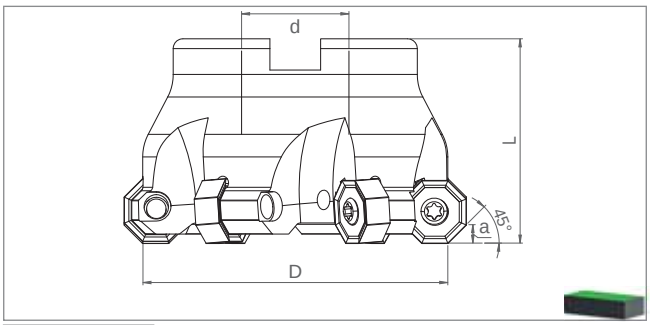

Ordering Code	Item Designation	Dimensions (mm)						Master Insert**
	TK45 ONHU 0604.. / 08T6..		*D*	*Z*	*d*	*L*	*a*	
SM42865	TK45 ONHU06 D63 A22 Z05-H	✓	63	5	22	40	4	ONHU 0604..
SM42872	TK45 ONHU06 D80 A27 Z06-H	✓	80	6	27	50	4	
SM42889	TK45 ONHU06 D100 A32 Z07-H	✓	100	7	32	50	4	
SM44913	TK45 ONHU08 D63 A22 Z05-H	✓	63	5	22	40	5	ONHU 08T6..
SM44920	TK45 ONHU08 D80 A27 Z06-H	✓	80	6	27	50	5	
SM44937	TK45 ONHU08 D100 A32 Z07-H	✓	100	7	32	50	5	

Size Designation	Master Insert**	Spare Parts		
		Screw	Torx Key	Screw Torque Value
				N·m
D63 - D100	ONHU 0604..	SSV M4x12-9515	STK-T15-9910	3,9
D63 - D100	ONHU 08T6..	SSV M5x13-9519	STK-T20-9911	5,5

Cooling mounting screw is optional / See Page "526" for cooling mounting screws.
İçten su vermeli montaj vidaları opsiyoneldir. / Bkz. Sayfa "526" İçten su vermeli montaj vidaları için.

*Suitable Insert brand is PRMT
**Suitable Insert brand is ZCC-CT

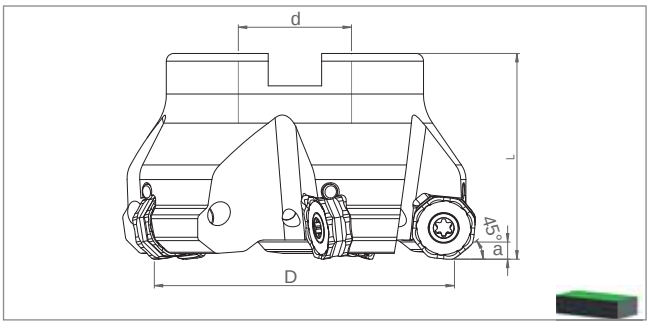

Ordering Code	Item Designation		Dimensions (mm)					Master Insert*
	TK45 ONMU 0504..		*D*	*Z*	*d*	*L*	*a*	
SM53502	TK45 ON0504 D50 A22 Z05-H	✓	50	5	22	40	3	ONMU 0504..
SM53519	TK45 ON0504 D63 A22 Z05-H	✓	63	5	22	40	3	
SM53526	TK45 ON0504 D80 A27 Z08-H	✓	80	8	27	50	3	
SM54707	TK45 ON0504 D100 A32 Z09-H	✓	100	9	32	50	3	

Cooling mounting screw is optional / See Page "526" for cooling mounting screws.
İçten su vermeli montaj vidaları opsiyoneldir. / Bkz. Sayfa "526" İçten su vermeli montaj vidaları için.

Size Designation	Master Insert*	Spare Parts		
		Screw	Torx Key	Screw Torque Value
				N·m
D50 - D100	ONMU 0504..	SSV M4x10-9514	STK-T15-9910	3,9

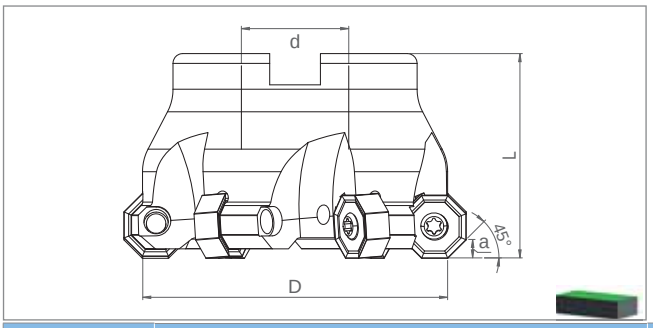

Ordering Code	Item Designation		Dimensions (mm)					Master Insert**
	TK45 XNMU 0705.. / 0906..		*D*	*Z*	*d*	*L*	*a*	
SM01576	TK45 XN07 D50 A22 Z05-H	✓	50	5	22	40	4.4	XNMU 0705..
SM01583	TK45 XN07 D63 A22 Z06-H	✓	63	6	22	40	4.4	
SM69770	TK45 XN07 D80 A27 Z07-H	✓	80	7	27	50	4.4	
SM01590	TK45 XN07 D100 A32 Z08-H	✓	100	8	32	50	4.4	
SM01606	TK45 XN09A D63 A22 Z05-H	✓	63	5	22	40	5	XNMU 0906..
SM01613	TK45 XN09A D80 A27 Z06-H	✓	80	6	27	50	5	
SM01620	TK45 XN09A D100 A32 Z08-H	✓	100	8	32	50	5	

Cooling mounting screw is optional / See Page "526" for cooling mounting screws.
İçten su vermeli montaj vidaları opsiyoneldir. / Bkz. Sayfa "526" İçten su vermeli montaj vidaları için.

Size Designation	Master Insert**	Spare Parts		
		Screw	Torx Key	Screw Torque Value
				N·m
D50 - D100	XNMU 0705..	SSV M3.5x10-9511	STK-T15-9910	2,7
D63 - D100	XNMU 0906..	SSV M5x13-9519	STK-T20-9911	5,5

*Suitable Insert brand is SCO
**Suitable Insert brand is ACHTK

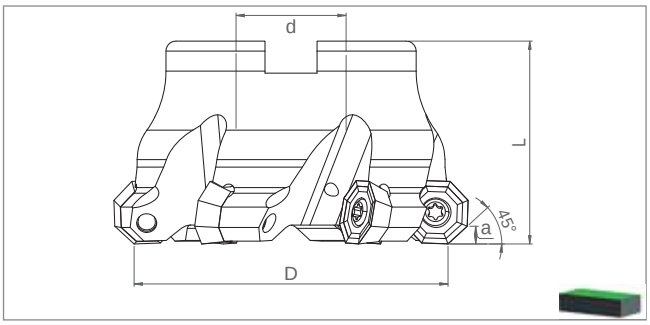

Ordering Code	Item Designation	Dimensions (mm)						Master Insert*
	TK45 OD.. 0504..		*D*	*Z*	*d*	*L*	*a*	
SM28814	TK45 OD05 D40 A16 Z04-H	✓	40	4	16	40	3.5	OD.. 0504..
SM28807	TK45 OD05 D50 A22 Z05-H	✓	50	5	22	40	3.5	
SM28791	TK45 OD05 D63 A22 Z06-H	✓	63	6	22	40	3.5	
SM28784	TK45 OD05 D80 A27 Z07-H	✓	80	7	27	50	3.5	
SM28777	TK45 OD05 D100 A32 Z08-H	✓	100	8	32	50	3.5	

Cooling mounting screw is optional / See Page "526" for cooling mounting screws.
İçten su vermeli montaj vidaları opsiyoneldir. / Bkz. Sayfa "526" İçten su vermeli montaj vidaları için.

Size Designation	Master Insert*	Spare Parts		
		Screw	Torx Key	Screw Torque Value
				N·m
D40 - D100	OD.. 0504..	SSV M3.5x10-9511	STK-T15-9910	3,9

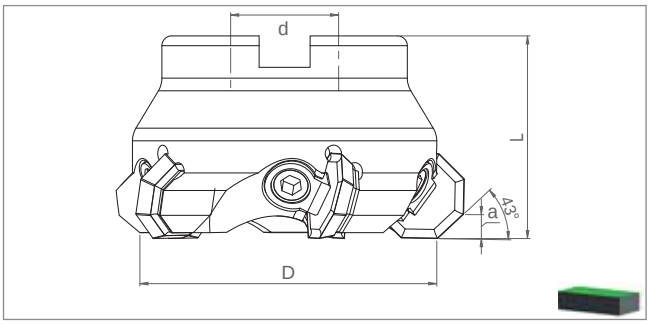

Ordering Code	Item Designation	Dimensions (mm)						Master Insert*
	TK43 OF.. 07T3..		*D*	*Z*	*d*	*L*	*a*	
SM25172	TK43 OF07T3 D63 A22 Z05	-	63	5	22	40	3	OF.. 07T3..
SM25189	TK43 OF07T3 D80 A27 Z06	-	80	6	27	50	3	
SM25196	TK43 OF07T3 D100 A32 Z07	-	100	7	32	50	3	
SM25202	TK43 OF07T3 D125 B40 Z09	-	125	9	40	63	3	

Size Designation	Master Insert*	Spare Parts		
		Clamp Part	Screw	Allen Key
D63 - D125	OF.. 07T3..	TKBP 9116	TKSV M8x1x18 9227	SAK-AA5-9904

*Suitable Insert brand is PRMT
**Suitable Insert brand is ISO

COPY MILLING TOOLS

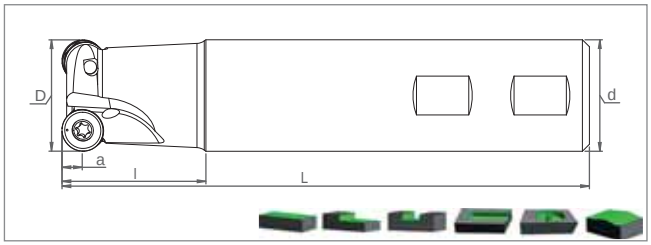

Ordering Code	Item Designation	Dimensions (mm)							Master Insert*
	ST RNMU 1004.. / 1205..		*D*	*d*	*Z*	*L*	*l*	*a*	
SM45446	ST RN10 D25 W25 L150 Z02-H	✓	25	25	2	150	40	5	RNMU 1004..
SM45453	ST RN10 D32 W32 L150 Z03-H	✓	32	32	3	150	40	5	
SM47624	ST RN12 D32 W32 L150 Z02-H	✓	32	32	2	150	40	6	RNMU 1205..
SM47631	ST RN12 D40 W32 L150 Z03-H	✓	40	32	3	150	30	6	

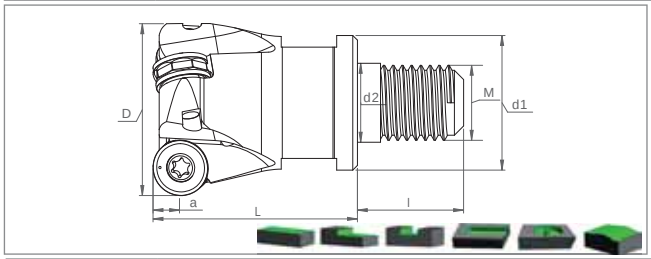

Ordering Code	Item Designation	Dimensions (mm)									Master Insert*
	MT RNMU 1004.. / 1205..		*D*	*Z*	*d1*	*d2*	*L*	*l*	*M*	*a*	
SM48959	MT RN10 D25 M12 L35 Z02-H	✓	25	2	21	12.5	35	23	12	5	RNMU 1004..
SM48966	MT RN10 D32 M16 L43 Z03-H	✓	32	3	29	17	43	23	16	5	
SM48973	MT RN12 D32 M16 L43 Z02-H	✓	32	2	29	17	43	23	16	6	RNMU 1205..
SM40151	MT RN12 D40 M16 L43 Z03-H	✓	40	3	29	17	43	23	16	6	

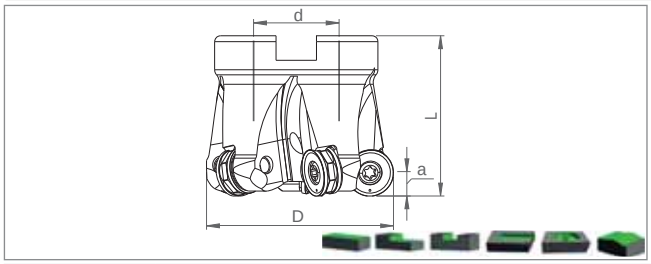

Ordering Code	Item Designation	Dimensions (mm)						Master Insert*
	TK RNMU 1004.. / 1205.. / 1606..		*D*	*Z*	*d*	*L*	*a*	
SM43060	TK RN10 D40 A16 Z04-H	✓	40	4	16	40	5	RNMU 1004..
SM43077	TK RN10 D50 A22 Z05-H	✓	50	5	22	40	5	
SM43084	TK RN12 D40 A16 Z04-H	✓	40	4	16	40	6	RNMU 1205..
SM40168	TK RN12 D50 A22 Z05-H	✓	50	5	22	40	6	
SM43091	TK RN12 D63 A22 Z06-H	✓	63	6	22	40	6	
SM43107	TK RN16 D50 A22 Z04-H	✓	50	4	22	40	8	RNMU 1606..
SM43114	TK RN16 D63 A22 Z05-H	✓	63	5	22	40	8	
SM43121	TK RN16 D80 A27 Z06-H	✓	80	6	27	50	8	

Size Designation	Master Insert*	Spare Parts		
		Screw	Torx Key	Screw Torque Value
				N·m
D25 - D50	RNMU 1004..	SSV M3.5x10-9511	STK-T15-9910	2,7
D32 - D40	RNMU 1205..	SSV M4x9x5-9528		3,9
D50 - D80	RNMU 1606..	SSV M5x13-9519	STK-T20-9911	

*Suitable Insert brand is TGTC

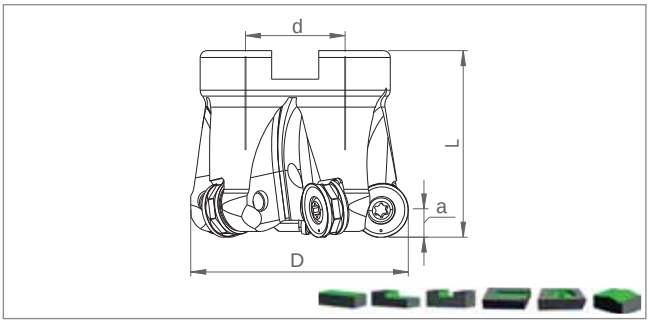

Ordering Code	Item Designation	Dimensions (mm)						Master Insert*
	TK ROMU 1204.. / 1605..		*D*	*Z*	*d*	*L*	*a*	
SM69831	TK ROMU1204 D50 A22 Z05-H	✓	50	5	22	40	6	ROMU 1204..
SM69848	TK ROMU1204 D63 A22 Z06-H	✓	63	6	22	40	6	
SM69855	TK ROMU1204 D66 A27 Z06-H	✓	66	6	27	50	6	
SM69862	TK ROMU1204 D80 A27 Z08-H	✓	80	8	27	50	6	
SM69879	TK ROMU1605 D63 A22 Z05-H	✓	63	5	22	40	8	ROMU 1605..
SM69886	TK ROMU1605 D80 A27 Z06-H	✓	80	6	27	50	8	
SM69893	TK ROMU1605 D100 A32 Z08-H	✓	100	8	32	50	8	

Cooling mounting screw is optional / See Page "526" for cooling mounting screws.
İçten su vermeli montaj vidaları opsiyoneldir. / Bkz. Sayfa "526" İçten su vermeli montaj vidaları için.

Size Designation	Master Insert*	Spare Parts		
		Screw	Torx Key	Screw Torque Value
				N·m
D50 - D80	ROMU 1204..	SSV M4x9-9542	STK-T15-9910	3,9
D63 - D100	ROMU 1605..	SSV M5x18-9530	STK-T20-9911	5,5

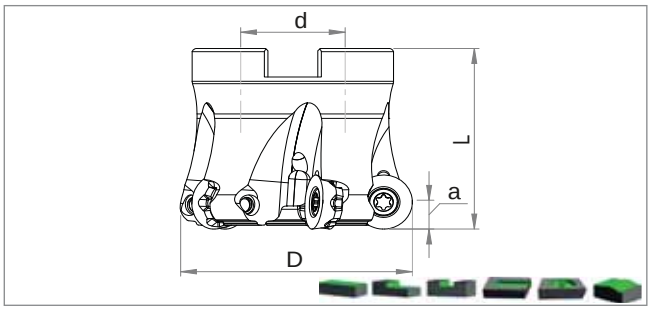

Ordering Code	Item Designation	Dimensions (mm)						Master Insert**
	TK RQMT 10T3.. / 1204..		*D*	*Z*	*d*	*L*	*a*	
SM71940	TK RQ10 D40 A16 Z05-H	✓	40	5	16	40	5	RQMT 10T3..
SM71957	TK RQ10 D50 A22 Z06-H	✓	50	6	22	40	5	
SM71964	TK RQ10 D52 A22 Z06-H	✓	52	6	22	40	5	
SM71971	TK RQ12 D50 A22 Z05-H	✓	50	5	22	40	6	RQMT 1204..
SM71988	TK RQ12 D63 A22 Z06-H	✓	63	6	22	40	6	
SM71995	TK RQ12 D66 A27 Z06-H	✓	66	6	27	50	6	

Cooling mounting screw is optional / See Page "526" for cooling mounting screws.
İçten su vermeli montaj vidaları opsiyoneldir. / Bkz. Sayfa "526" İçten su vermeli montaj vidaları için.

Size Designation	Master Insert**	Spare Parts		
		Screw	Torx Key	Screw Torque Value
				N·m
D40 - D52	RQMT 10T3..	SSV M3.5x10-95111	STK-T15-9910	2,7
D50 - D66	RQMT 1204..	SSV M4x10-9514		3,9

*Suitable Insert brand is KYCR
**Suitable Insert brand is TNGLY

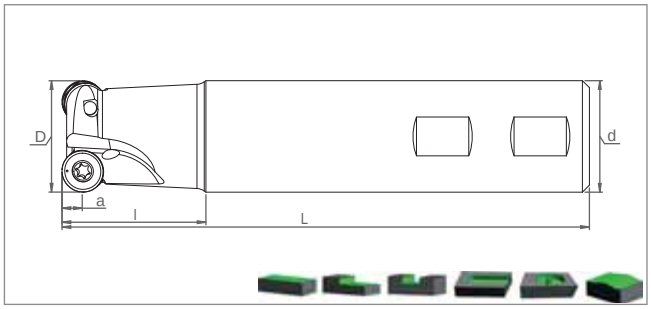

Ordering Code	Item Designation	Dimensions (mm)							Master Insert*
	ST RPMT 1204..		*D*	*d*	*Z*	*L*	*l*	*a*	
SM69497	ST RP1204A D26 W25 L150 Z02-H	✓	26	25	2	150	30	6	RPMT 1204..
SM69503	ST RP1204A D33 W32 L150 Z03-H	✓	33	32	3	150	30	6	

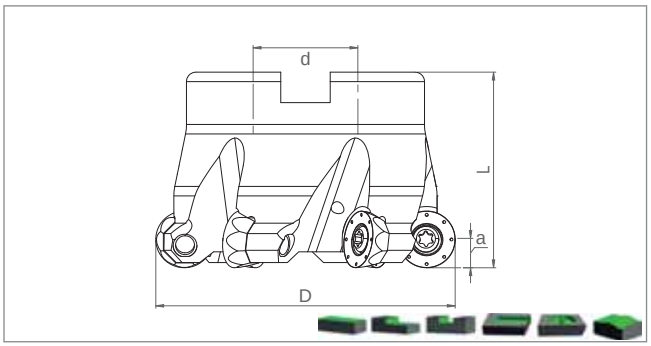

Cooling mounting screw is optional / See Page "526" for cooling mounting screws.
İçten su vermeli montaj vidaları opsiyoneldir. / Bkz. Sayfa "526" İçten su vermeli montaj vidaları için.

Ordering Code	Item Designation	Dimensions (mm)						Master Insert*
	TK RPMT 1204..		*D*	*Z*	*d*	*L*	*a*	
SM69510	TK RP1204A D40 A16 Z04-H	✓	40	4	16	40	6	RPMT 1204..
SM62603	TK RP1204A D50 A22 Z05-H	✓	50	5	22	40	6	
SM62610	TK RP1204A D63 A22 Z06-H	✓	63	6	22	40	6	

Size Designation	Master Insert*	Spare Parts		
		Screw	Torx Key	Screw Torque Value
				N·m
D26 - D63	RPMT 1204..	SSV M4x10-9514	STK-T15-9910	3,9

*Suitable Insert brand is ACHTK

Milling Tools

F

- **90** Milling Tools
- **45** Milling Tools
- **Copy** Milling Tools
- **Ball Nose** Milling Tools

COPY MILLING TOOLS

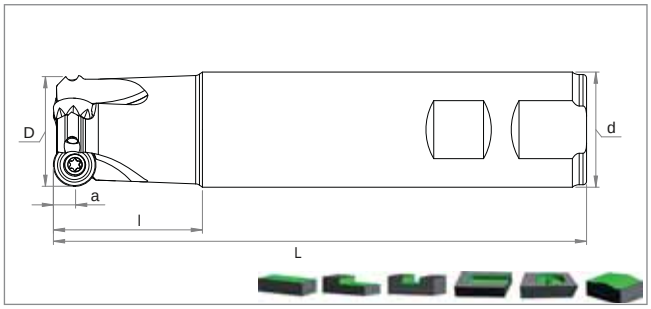

Ordering Code	Item Designation	Dimensions (mm)							Master Insert*
	ST RYMX 1004.. / 1205..		*D*	*d*	*Z*	*L*	*l*	*a*	
SM71445	ST RY10 D21 W20 L150 Z02-H	✓	21	20	2	150	30	5	RYMX 1004..
SM71452	ST RY10 D25 W25 L150 Z03-H	✓	25	25	3	150	40	5	
SM71469	ST RY10 D26 W25 L150 Z03-H	✓	26	25	3	150	30	5	
SM71476	ST RY10 D33 W32 L150 Z-04H	✓	33	32	3	150	40	5	
SM71483	ST RY12 D32 W32 L150 Z-03H	✓	32	32	3	150	40	6	RYMX 1205..
SM71490	ST RY12 D33 W32 L150 Z-03H	✓	33	32	3	150	30	6	

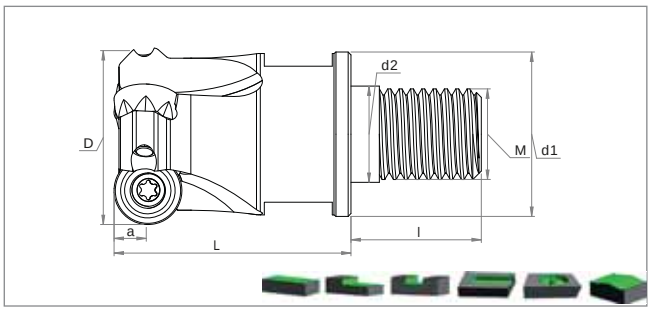

Ordering Code	Item Designation	Dimensions (mm)									Master Insert*
	MT RYMX 1004.. / 1205..		*D*	*Z*	*d1*	*d2*	*L*	*l*	*M*	*a*	
SM71506	MT RY10 D25 M12 L35 Z03-H	✓	25	3	21	12.5	35	23	12	5	RYMX 1004..
SM71513	MT RY10 D32 M16 L43 Z04-H	✓	32	4	29	17	43	23	16	5	
SM71520	MT RY10 D40 M16 L43 Z05-H	✓	40	5	29	17	43	23	16	5	
SM71537	MT RY12 D32 M16 L43 Z03-H	✓	32	3	29	17	43	23	16	6	RYMX 1205..
SM71544	MT RY12 D40 M16 L43 Z04-H	✓	40	4	29	17	43	23	16	6	

Size Designation	Master Insert*	Spare Parts		
		Screw	Torx Key	Screw Torque Value
				N·m
D21 - D40	RYMX 1004..	SSV M3.5x8-9510	STK-T15-9910	2,7
D32 - D40	RYMX 1205..	SSV M4x10-9514		3,9

*Suitable Insert brand is TGTC

SMOXH® CUTTING TOOLS
Kalitenin Yükselen Gücü

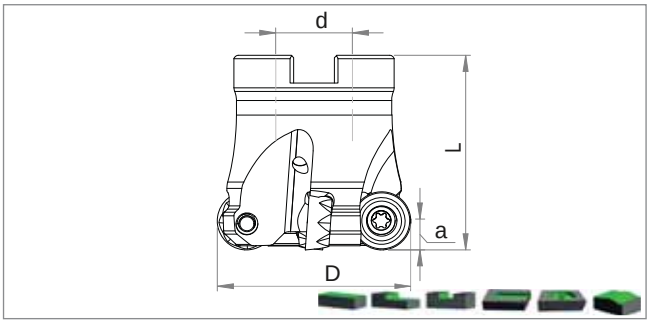

Ordering Code	Item Designation	Dimensions (mm)						Master Insert*
	TK RYMX 1004.. / 1205..		*D*	*Z*	*d*	*L*	*a*	
SM71551	TK RY10 D40 A16 Z04-H	✓	40	4	16	40	5	RYMX 1004..
SM71568	TK RY10 D50 A22 Z05-H	✓	50	5	22	40	5	
SM71575	TK RY10 D63 A22 Z06-H	✓	63	6	22	40	5	
SM71582	TK RY12 D40 A16 Z04-H	✓	40	4	16	40	6	RYMX 1205..
SM71599	TK RY12 D50 A22 Z05-H	✓	50	5	22	40	6	
SM71605	TK RY12 D63 A22 Z06-H	✓	63	6	22	40	6	
SM71612	TK RY12 D80 A27 Z07-H	✓	80	7	27	50	6	
SM71629	TK RY12 D100 A32 Z08-H	✓	100	8	32	50	6	

Cooling mounting screw is optional / See Page “526” for cooling mounting screws.
İçten su vermeli montaj vidaları opsiyoneldir. / Bkz. Sayfa “526” İçten su vermeli montaj vidaları için.

Size Designation	Master Insert*	Spare Parts		
		Screw	Torx Key	Screw Torque Value
				N·m
D40 - D63	RYMX 1004..	SSV M3.5x8-9510	STK-T15-9910	2,7
D40 - D100	RYMX 1205..	SSV M4x10-9514		3,9

*Suitable Insert brand is TGTC

COPY MILLING TOOLS

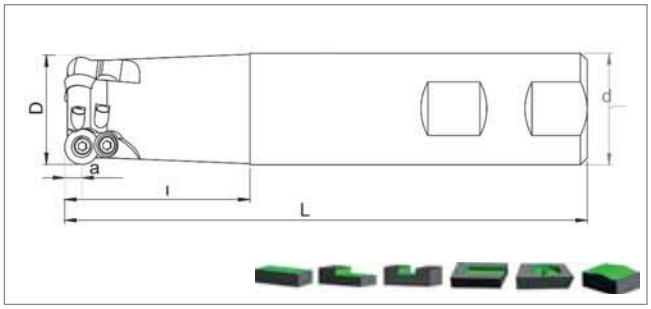

Ordering Code	Item Designation	Dimensions (mm)							Master Insert*
	ST RD.. 0501.. / 0702.. / 0803..		*D*	*d*	*Z*	*L*	*l*	*a*	
SM58972	ST RD05 D08 W10 L100 Z01-H	✓	8	10	1	100	20	2.5	RDMX 0501..*
SM58989	ST RD05 D10 W12 L100 Z02-H	✓	10	12	2	100	20	2.5	
SM58996	ST RD05 D12 W12 L100 Z02-H	✓	12	12	2	100	20	2.5	
SM59009	ST RD05 D14 W12 L100 Z03-H	✓	14	12	3	100	20	2.5	
SM45415	ST RD07 D16 W16 L120 Z02	-	16	16	2	120	30	3.5	RDKW 0702..**
SM45422	ST RD07 D20 W20 L120 Z02	-	20	20	2	120	30	3.5	
SM54400	ST RD07 D20 W20 L120 Z03	-	20	20	3	120	30	3.5	
SM45439	ST RD07 D25 W25 L120 Z03	-	25	25	3	120	30	3.5	
SM54417	ST RD07 D25 W25 L120 Z04	-	25	25	4	120	30	3.5	
SM13124	ST RD08 D16 W16 L120 Z02	-	16	16	2	120	30	4	RD.. 0803..**
SM13162	ST RD08 D16 W16 L150 Z02	-	16	16	2	150	40	4	
SM13131	ST RD08 D20 W20 L120 Z02	-	20	20	2	120	30	4	
SM13179	ST RD08 D20 W20 L150 Z02	-	20	20	2	150	40	4	
SM13209	ST RD08 D20 C20 L200 Z02	-	20	20	2	200	50	4	
SM13148	ST RD08 D25 W25 L120 Z03	-	25	25	3	120	30	4	
SM13186	ST RD08 D25 W25 L150 Z03	-	25	25	3	150	40	4	
SM13216	ST RD08 D25 C25 L200 Z03	-	25	25	3	200	50	4	
SM13155	ST RD08 D32 W32 L120 Z04	-	32	32	4	120	30	4	
SM13193	ST RD08 D32 W32 L150 Z04	-	32	32	4	150	40	4	
SM13223	ST RD08 D32 C32 L200 Z04	-	32	32	4	200	50	4	

Size Designation	Master Insert*	Spare Parts				
		Screw	Torx Key	Wedge Clamp	Clamp Screw	Screw Torque Value
						N·m
D10 - D14	RDMX 0501..*	SSV M2x4-9521	STK-T06-9906	-	-	0,4
D16 - D25	RDKW 0702..**	SSV M2.5x5-9505	STK-T08-9908			1,0
D16 - D32	RD.. 0803..**	SSV M3x6-9507				1,9

*Suitable Insert brand is TGTC
**Suitable Insert brand is ISO

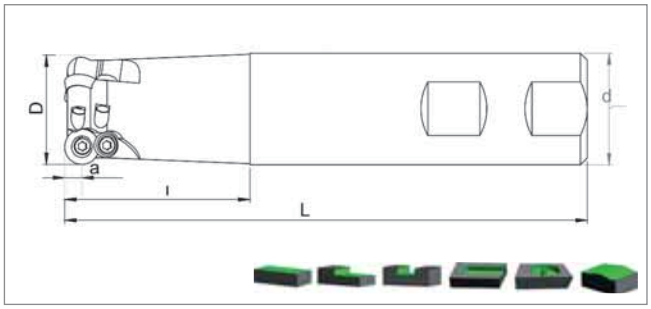

Ordering Code	Item Designation	Dimensions (mm)							Master Insert*
	ST RD.. 1003.. / 12T3..		*D*	*d*	*Z*	*L*	*l*	*a*	
SM13230	ST RD1003 D20 W20 L120 Z02	-	20	20	2	120	30	5	RD.. 1003..
SM13261	ST RD1003 D20 W20 L150 Z02	-	20	20	2	150	40	5	
SM13292	ST RD1003 D20 C20 L200 Z02	-	20	20	2	200	50	5	
SM13247	ST RD1003 D25 W25 L120 Z03	-	25	25	3	120	30	5	
SM13278	ST RD1003 D25 W25 L150 Z03	-	25	25	3	150	40	5	
SM13308	ST RD1003 D25 C25 L200 Z03	-	25	25	3	200	50	5	
SM37113	ST RD1003 D32 W25 L120 Z03	-	32	25	3	120	30	5	
SM13254	ST RD1003 D32 W32 L120 Z03	-	32	32	3	120	30	5	
SM13285	ST RD1003 D32 W32 L150 Z03	-	32	32	3	150	40	5	
SM37120	ST RD1003 D32 W25 L150 Z03	-	32	25	3	150	30	5	
SM13315	ST RD1003 D32 C32 L200 Z03	-	32	32	3	200	50	5	
SM37137	ST RD1003 D32 C25 L200 Z03	-	32	25	3	200	30	5	
SM13322	ST RD1003 D40 W32 L120 Z04	-	40	32	4	120	30	5	
SM13339	ST RD1003 D40 W32 L150 Z04	-	40	32	4	150	30	5	
SM13346	ST RD1003 D40 C32 L200 Z04	-	40	32	4	200	30	5	
SM13353	ST RD12T3 D25 W25 L120 Z02	-	25	25	2	120	30	6	RD.. 12T3..
SM13360	ST RD12T3 D25 W25 L150 Z02	-	25	25	2	150	40	6	
SM13377	ST RD12T3 D25 C25 L200 Z02	-	25	25	2	200	50	6	
SM37168	ST RD12T3 D32 W25 L120 Z03	-	32	25	3	120	30	6	
SM13391	ST RD12T3 D32 W32 L150 Z03	-	32	32	3	150	40	6	
SM37182	ST RD12T3 D32 W25 L150 Z03	-	32	25	3	150	30	6	
SM13407	ST RD12T3 D32 C32 L200 Z03	-	32	32	3	200	50	6	
SM39087	ST RD12T3 D32 C25 L200 Z03	-	32	25	3	200	30	6	
SM13414	ST RD12T3 D40 W32 L120 Z04	-	40	32	4	120	30	6	
SM13421	ST RD12T3 D40 W32 L150 Z04	-	40	32	4	150	30	6	
SM13438	ST RD12T3 D40 C32 L200 Z04	-	40	32	4	200	30	6	

Size Designation	Master Insert*	Spare Parts				
		Screw	Torx Key	Wedge Clamp	Clamp Screw	Screw Torque Value
						N·m
D20	RD.. 1003..	SSV M3.5x8 SC 9510	STK-T15-9910	RDTP 9124	SSV M3.5x11 9532	2,7
D25 - D40						
D25 - D40	RD.. 12T3	SSV M3.5x10-9511				

*Suitable Insert brand is ISO

COPY MILLING TOOLS

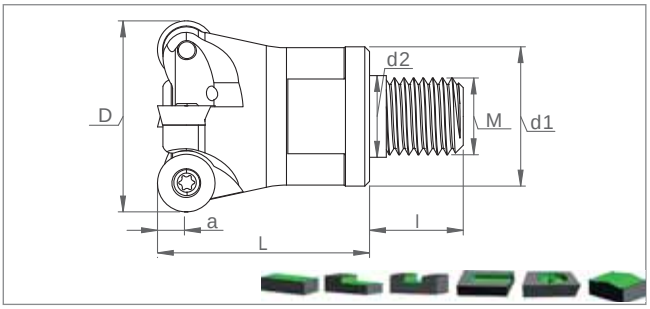

Ordering Code	Item Designation	Dimensions (mm)									Master Insert*
MT RD.. 0702.. / 0803.. / 1003.. / 12T3.. ISO			D	Z	d1	d2	L	l	M	a	
SM56602	MT RD07 D16 M08 L25 Z02-H	✓	16	2	15	8.5	25	17	8	3.5	RDKW 0702..
SM56619	MT RD07 D20 M10 L30 Z03-H	✓	20	3	18	10.5	30	19	10	3.5	
SM56626	MT RD07 D25 M12 L35 Z04-H	✓	25	4	21	12.5	35	23	12	3.5	
SM25783	MT RD08 D16 M08 L25 Z02-H	✓	16	2	15	8.5	25	17	8	4	RD.. 0803..
SM39544	MT RD08 D20 M10 L30 Z02-H	✓	20	2	18	10.5	30	19	10	4	
SM23970	MT RD08 D20 M10 L30 Z03-H	✓	20	3	18	10.5	30	19	10	4	
SM39551	MT RD08 D25 M12 L35 Z03-H	✓	25	3	21	12.5	35	23	12	4	
SM23987	MT RD08 D25 M12 L35 Z04-H	✓	25	4	21	12.5	35	23	12	4	
SM39537	MT RD08 D35 M16 L43 Z04-H	✓	35	4	29	17	43	23	16	4	
SM15654	MT RD1003 D20 M10 L30 Z02-H	✓	20	2	18	10.5	30	19	10	5	RD.. 1003..
SM15661	MT RD1003 D25 M12 L35 Z03-H	✓	25	3	21	12.5	35	23	12	5	
SM15678	MT RD1003 D30 M16 L43 Z03-H	✓	30	3	29	17	43	23	16	5	
SM15685	MT RD1003 D32 M16 L43 Z04-H	✓	32	4	29	17	43	23	16	5	
SM15692	MT RD1003 D35 M16 L43 Z04-H	✓	35	4	29	17	43	23	16	5	
SM15647	MT RD1003 D40 M16 L43 Z04-H	✓	40	4	29	17	43	23	16	5	
SM15708	MT RD1003 D42 M16 L43 Z05-H	✓	42	5	29	17	43	23	16	5	
SM15715	MT RD12T3 D24 M12 L35 Z02-H	✓	24	2	21	12.5	35	23	12	6	RD.. 12T3..
SM15722	MT RD12T3 D25 M12 L35 Z02-H	✓	25	2	21	12.5	35	23	12	6	
SM15739	MT RD12T3 D32 M16 L43 Z03-H	✓	32	3	29	17	43	23	16	6	
SM15746	MT RD12T3 D35 M16 L43 Z03-H	✓	35	3	29	17	43	23	16	6	
SM62092	MT RD12T3 D35 M16 L43 Z04-H	✓	35	4	29	17	43	23	16	6	
SM15753	MT RD12T3 D40 M16 L43 Z04-H	✓	40	4	29	17	43	23	16	6	
SM15760	MT RD12T3 D42 M16 L43 Z04-H	✓	42	4	29	17	43	23	16	6	

Size Designation	Master Insert*	Spare Parts				
		Screw	Torx Key	Wedge Clamp	Clamp Screw	Screw Torque Value
						N·m
D16 - D25	RDKW 0702..	SSV M2.5x5-9505	STK-T08-9908	-	-	1,0
D16 - D35	RD.. 0803..	SSV M3x6-9507				1,9
D20 - D42	RD.. 1003..	SSV M3.5x8-SC-9513	STK-T10-9909			2,7
D24 - D42	RD.. 12T3..	SSV M3.5x10-9511	STK-T15-9910			

*Suitable Insert brand is ISO

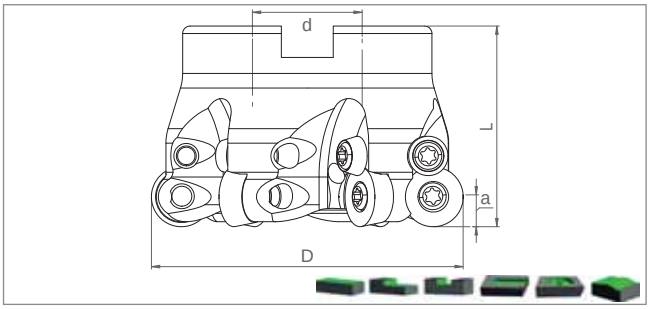

Ordering Code	Item Designation	Dimensions (mm)						Master Insert*
	TK RD.. 1003.. / 12T3.. / 1604.. ISO		*D*	*Z*	*d*	*L*	*a*	
SM28180	TK RD1003 D40 A16 Z04-H	✓	40	4	16	40	5	RD.. 1003..
SM28173	TK RD1003 D50 A22 Z05-H	✓	50	5	22	40	5	
SM50242	TK RD1003 D52 A22 Z05-H	✓	52	5	22	40	5	
SM28166	TK RD1003 D63 A22 Z06-H	✓	63	6	22	40	5	
SM50259	TK RD1003 D66 A27 Z06-H	✓	66	6	27	50	5	
SM28159	TK RD1003 D80 A27 Z07-H	✓	80	7	27	50	5	
SM28142	TK RD1003 D100 A32 Z08-H	✓	100	8	32	50	5	
SM26032	TK RD1003 D125 B40 Z09	-	125	9	40	63	5	
SM28135	TK RD12T3 D40 A16 Z04-H	✓	40	4	16	40	6	RD.. 12T3..
SM28128	TK RD12T3 D50 A22 Z05-H	✓	50	5	22	40	6	
SM50266	TK RD12T3 D52 A22 Z05-H	✓	52	5	22	40	6	
SM72121	**TK RD12T3 D52 L50 A22 Z05-H**	✓	**52**	**5**	**22**	**50**	**6**	
SM28111	TK RD12T3 D63 A22 Z06-H	✓	63	6	22	40	6	
SM50273	TK RD12T3 D66 A27 Z06-H	✓	66	6	27	50	6	
SM28104	TK RD12T3 D80 A27 Z07-H	✓	80	7	27	50	6	
SM28098	TK RD12T3 D100 A32 Z08-H	✓	100	8	32	50	6	
SM21051	TK RD12T3 D125 B40 Z09	-	125	9	40	63	6	
SM60814	TK RD1604 D63 A22 Z04-H	✓	63	4	22	40	8	RD.. 1604..
SM33320	TK RD1604 D63 A22 Z05-H	✓	63	5	22	40	8	
SM33368	TK RD1604 D80 A27 Z06-H	✓	80	6	27	50	8	
SM33382	TK RD1604 D100 A32 Z07-H	✓	100	7	32	50	8	
SM54394	TK RD1604 D125 B40 Z08	-	125	8	40	63	8	

Cooling mounting screw is optional / See Page "526" for cooling mounting screws.
İçten su vermeli montaj vidaları opsiyoneldir. / Bkz. Sayfa "526" İçten su vermeli montaj vidaları için.

Size Designation	Master Insert*	Spare Parts				
		Screw	Torx Key	Wedge Clamp	Clamp Screw	Screw Torque Value
						N·m
D40 - D125	RD.. 1003..	SSV M3.5x8-SC-9513	STK-T10-9909	RDTP 9124	SSV M3.5x11 9532	2,7
D40 - D125	RD.. 12T3..	SSV M3.5x10-9511	STK-T15-9910			
D63 - D100	RD.. 1604..	SSV M4.5x11-9518	STK-T20-9911			4,7

*Suitable Insert brand is ISO

COPY MILLING TOOLS

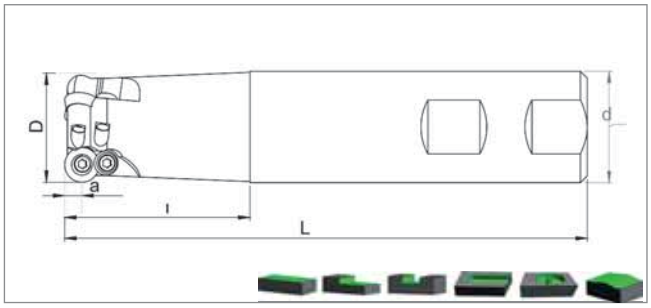

Ordering Code	Item Designation	Dimensions (mm)							Master Insert*
	ST RD.. 10T3.. / 1204..		*D*	*d*	*Z*	*L*	*l*	*a*	
SM54424	ST RD10T3 D20 W20 L150 Z02	-	20	20	2	150	40	5	RD.. 10T3..
SM54431	ST RD10T3 D25 W25 L150 Z02	-	25	25	2	150	40	5	
SM54448	ST RD10T3 D32 W32 L150 Z03	-	32	32	3	150	40	5	
SM52802	ST RD1204 D25 W25 L150 Z02	-	25	25	2	150	40	6	RD.. 1204..
SM54455	ST RD1204 D26 W25 L150 Z02	-	26	25	2	150	25	6	
SM54462	ST RD1204 D32 W32 L150 Z03	-	32	32	3	150	40	6	
SM54479	ST RD1204 D33 W32 L150 Z03	-	33	32	3	150	30	6	

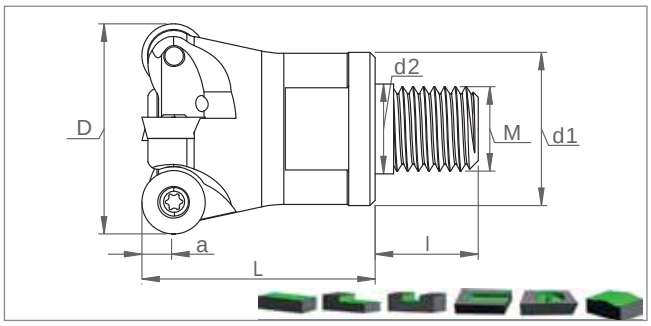

Ordering Code	Item Designation	Dimensions (mm)									Master Insert*
	MT RD.. 10T3.. / 1204..		*D*	*Z*	*d1*	*d2*	*L*	*l*	*M*	*a*	
SM54486	MT RD10T3 D20 M10 L30 Z02-H	✓	20	2	18	10.5	30	19	10	5	RD.. 10T3..
SM54493	MT RD10T3 D25 M12 L35 Z02-H	✓	25	2	21	12.5	35	23	12	5	
SM54509	MT RD10T3 D32 M16 L43 Z03-H	✓	32	3	29	17	43	23	16	5	
SM52819	MT RD1204 D32 M16 L43 Z03-H	✓	32	3	29	17	43	23	16	6	RD.. 1204..
SM54516	MT RD1204 D35 M16 L43 Z03-H	✓	35	3	29	17	43	23	16	6	
SM54523	MT RD1204 D40 M16 L43 Z04-H	✓	40	4	29	17	43	23	16	6	
SM52826	MT RD1204 D42 M16 L43 Z04-H	✓	42	4	29	17	43	23	16	6	

Size Designation	Master Insert*	Spare Parts				
		Screw	Torx Key	Wedge Clamp	Clamp Screw	Screw Torque Value
						N·m
D20	RD.. 10T3	SSV M3.5x8-9510	STK-T15-9910	-	-	2,7
D25 - D32		SSV M3.5x10-9511				
D32 - D42	RD.. 1204..					

*Suitable Insert brand is ISO

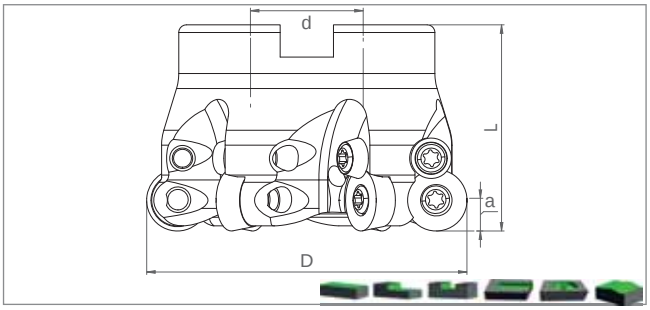

Ordering Code	Item Designation	Dimensions (mm)						Master Insert*
	TK RD.. 10T3.. / 1204		*D*	*Z*	*d*	*L*	*a*	
SM32958	TK RD10T3 D40 A16 Z04-H	✓	40	4	16	40	5	RD.. 10T3..
SM32934	TK RD10T3 D50 A22 Z05-H	✓	50	5	22	40	5	
SM32941	TK RD10T3 D63 A22 Z06-H	✓	63	6	22	40	5	
SM32972	TK RD1204 D40 A16 Z04-H	✓	40	4	16	40	6	RD.. 1204..
SM32989	TK RD1204 D50 A22 Z05-H	✓	50	5	22	40	6	
SM33252	TK RD1204 D63 A22 Z06-H	✓	63	6	22	40	6	
SM33276	TK RD1204 D80 A27 Z07-H	✓	80	7	27	50	6	
SM33290	TK RD1204 D100 A32 Z08-H	✓	100	8	32	50	6	

Cooling mounting screw is optional / See Page "526" for cooling mounting screws.
İçten su vermeli montaj vidaları opsiyoneldir. / Bkz. Sayfa "526" İçten su vermeli montaj vidaları için.

Size Designation	Master Insert*	Spare Parts				
		Screw	Torx Key	Wedge Clamp	Clamp Screw	Screw Torque Value
						N·m
D40 - D63	RD.. 10T3..	SSV M3.5x10-9511	STK-T15-9910	RDTP 9124	SSV M3.5x11 9532	2,7
D40 - D100	RD.. 1204..					

*Suitable Insert brand is ISO

COPY MILLING TOOLS

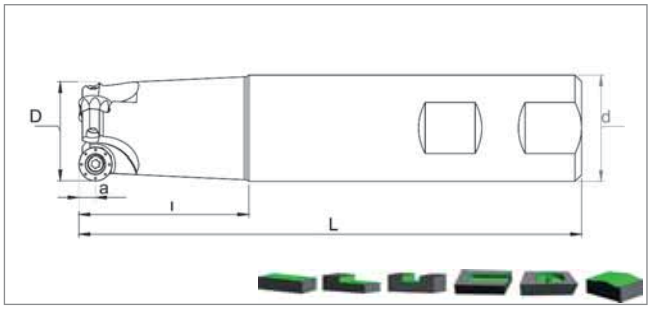

Ordering Code	Item Designation	Dimensions (mm)							Master Insert*
	ST RPMT 10T3.. / 1204..		*D*	*d*	*Z*	*L*	*l*	*a*	
SM51577	ST RP10T3 D25 W25 L150 Z03-H	✓	25	25	3	150	40	5	RPMT 10T3..
SM51584	ST RP10T3 D32 W32 L150 Z04-H	✓	32	32	4	150	40	5	
SM51591	ST RP1204 D25 W25 L150 Z02-H	✓	25	25	2	150	40	6	RPMT 1204..

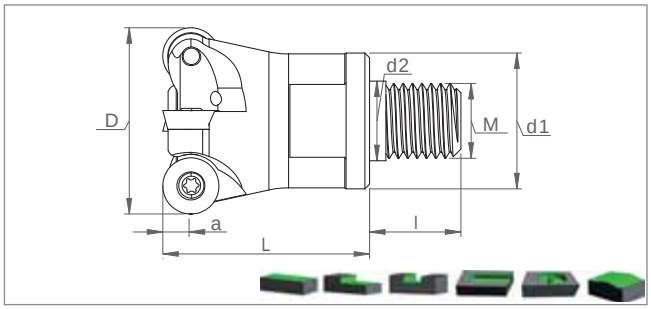

Ordering Code	Item Designation	Dimensions (mm)									Master Insert*
	MT RPMT 10T3.. / 1204..		*D*	*Z*	*d1*	*d2*	*L*	*l*	*M*	*a*	
SM49888	MT RP10T3 D25 M12 L35 Z03-H	✓	25	3	21	12.5	35	23	12	5	RPMT 10T3..
SM49895	MT RP10T3 D32 M16 L43 Z04-H	✓	32	4	29	17	43	23	16	5	
SM49901	MT RP10T3 D35 M16 L43 Z04-H	✓	35	4	29	17	43	23	16	5	
SM49918	MT RP10T3 D40 M16 L43 Z04-H	✓	40	4	29	17	43	23	16	5	
SM49925	MT RP10T3 D42 M16 L43 Z05-H	✓	42	5	29	17	43	23	16	5	
SM49932	MT RP1204 D25 M12 L35 Z02-H	✓	25	2	21	12.5	35	23	12	6	RPMT 1204..
SM49949	MT RP1204 D32 M16 L43 Z03-H	✓	32	3	29	17	43	23	16	6	
SM49956	MT RP1204 D35 M16 L43 Z03-H	✓	35	3	29	17	43	23	16	6	
SM49963	MT RP1204 D40 M16 L43 Z04-H	✓	40	4	29	17	43	23	16	6	
SM49970	MT RP1204 D42 M16 L43 Z04-H	✓	42	4	29	17	43	23	16	6	

Size Designation	Master Insert*	Spare Parts		
		Screw	Torx Key	Screw Torque Value N·m
D25 - D42	RPMT 10T3..	SSV M3.5x10-9511	STK-T15-9910	2,7
D25 - D42	RPMT 1204..	SSV M4x9x5-9528		3,9

*Suitable Insert brand is MTSBH

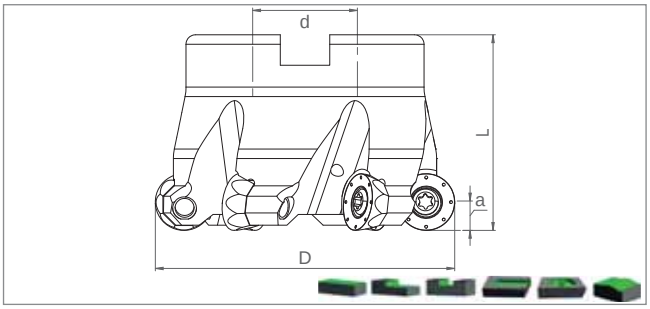

Ordering Code	Item Designation	Dimensions (mm)						Master Insert*
	TK RPMT 10T3.. / 1204..		*D*	*Z*	*d*	*L*	*a*	
SM50372	TK RP10T3 D40 A16 Z04-H	✓	40	4	16	40	5	RPMT 10T3..
SM50389	TK RP10T3 D50 A22 Z05-H	✓	50	5	22	40	5	
SM50396	TK RP10T3 D52 A22 Z05-H	✓	52	5	22	40	5	
SM50402	TK RP10T3 D63 A22 Z06-H	✓	63	6	22	40	5	
SM50419	TK RP10T3 D66 A27 Z06-H	✓	66	6	27	50	5	
SM50426	TK RP10T3 D80 A27 Z07-H	✓	80	7	27	50	5	
SM50433	TK RP10T3 D100 A32 Z08-H	✓	100	8	32	50	5	
SM33764	TK RP1204 D40 A16 Z04-H	✓	40	4	16	40	6	RPMT 1204..
SM33788	TK RP1204 D50 A22 Z05-H	✓	50	5	22	40	6	
SM50334	TK RP1204 D52 A22 Z05-H	✓	52	5	22	40	6	
SM33801	TK RP1204 D63 A22 Z06-H	✓	63	6	22	40	6	
SM50341	TK RP1204 D66 A27 Z06-H	✓	66	6	27	50	6	
SM33825	TK RP1204 D80 A27 Z07-H	✓	80	7	27	50	6	
SM50365	TK RP1204 D100 A32 Z08-H	✓	100	8	32	50	6	
SM00678	TK RP1204 D125 B40 Z09	-	125	9	40	63	6	

Cooling mounting screw is optional / See Page “526” for cooling mounting screws.
İçten su vermeli montaj vidaları opsiyoneldir. / Bkz. Sayfa “526” İçten su vermeli montaj vidaları için.

Size Designation	Master Insert*	Spare Parts		
		Screw	Torx Key	Screw Torque Value
				N·m
D40 - D100	RPMT 10T3..	SSV M3.5x10-9511	STK-T15-9910	2,7
D40 - D125	RPMT 1204..	SSV M4x9x5-9528		3,9

*Suitable Insert brand is MTSBH

COPY MILLING TOOLS

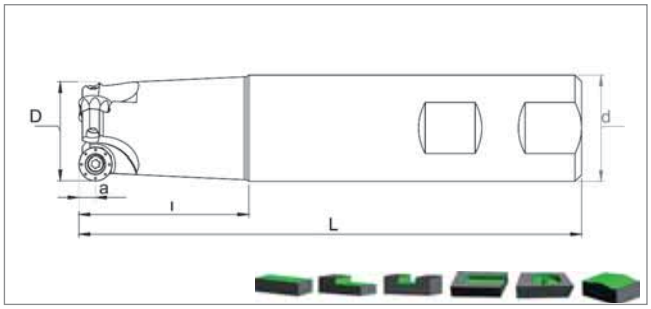

Ordering Code	Item Designation	Dimensions (mm)							Master Insert*
	ST RP.T 10T3.. / 1204..		*D*	*d*	*Z*	*L*	*l*	*a*	
SM47105	ST RPMT10 D25 W25 L150 Z02-H	✓	25	25	2	150	40	5	RPMT 10T3..
SM47112	ST RPMT10 D32 W32 L150 Z03-H	✓	32	32	3	150	40	5	
SM47129	ST RPMT10 D35 W32 L150 Z03-H	✓	35	32	3	150	30	5	
SM47136	ST RPMT12 D32 W32 L150 Z03-H	✓	32	32	3	150	40	6	RP.T 1204..
SM47143	ST RPMT12 D40 W32 L150 Z04-H	✓	40	32	4	150	30	6	

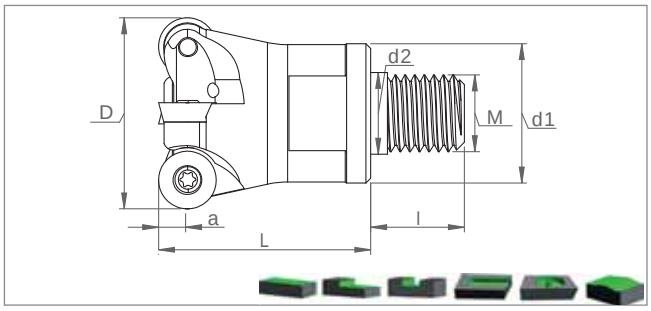

Ordering Code	Item Designation	Dimensions (mm)									Master Insert*
	MT RP.T 10T3.. / 1204..		*D*	*Z*	*d1*	*d2*	*L*	*l*	*M*	*a*	
SM47068	MT RPMT10 D25 M12 L35 Z02-H	✓	25	2	21	12.5	35	23	12	5	RPMT 10T3..
SM47075	MT RPMT10 D32 M16 L43 Z03-H	✓	32	3	29	17	43	23	16	5	
SM47082	MT RPMT12 D32 M16 L43 Z03-H	✓	32	3	29	17	43	23	16	6	RPMT 1204..
SM47099	MT RPMT12 D40 M16 L43 Z04-H	✓	40	4	29	17	43	23	16	6	

Size Designation	Master Insert*	Spare Parts		
		Screw	Torx Key	Screw Torque Value
				N·m
D25 - D35	RPMT 10T3..	SSV M3x8-9508	STK-T08-9908	1,9
D32 - D40	RPMT 1204..	SSV M4x10-9514	STK-T15-9910	3,9

**Suitable Insert brand is KYCR

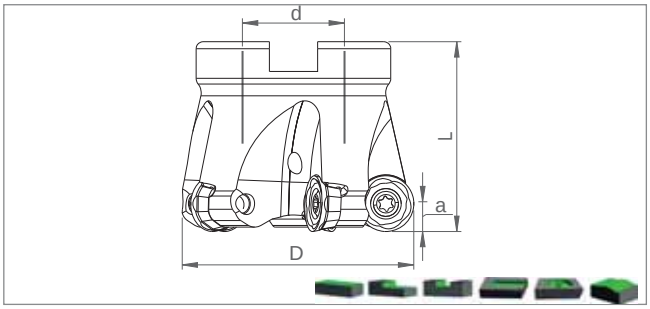

Ordering Code	Item Designation	Dimensions (mm)						Master Insert*
	TK RPMT 10T3.. / 1204.. / 1605..		*D*	*Z*	*d*	*L*	*a*	
SM46603	TK RPMT10 D40 A16 Z04-H	✓	40	4	16	40	5	RPMT 10T3..
SM46610	TK RPMT10 D50 A22 Z05-H	✓	50	5	22	40	5	
SM46627	TK RPMT10 D63 A22 Z06-H	✓	63	6	22	40	5	
SM46559	TK RPMT12 D40 A16 Z04-H	✓	40	4	16	40	6	RPMT 1204..
SM46566	TK RPMT12 D50 A22 Z05-H	✓	50	5	22	40	6	
SM46573	TK RPMT12 D52 A22 Z05-H	✓	52	5	22	40	6	
SM46580	TK RPMT12 D63 A22 Z06-H	✓	63	6	22	40	6	
SM46597	TK RPMT12 D80 A27 Z07-H	✓	80	7	27	50	6	
SM54110	TK RPMT16 D63 A22 Z04-H	✓	63	4	22	40	8	RPMT 1605..
SM54127	TK RPMT16 D80 A27 Z05-H	✓	80	5	27	50	8	
SM54134	TK RPMT16 D100 A32 Z06-H	✓	100	6	32	50	8	
SM54141	TK RPMT16 D125 B40 Z07	-	125	7	40	63	8	

Cooling mounting screw is optional / See Page “526” for cooling mounting screws.
İçten su vermeli montaj vidaları opsiyoneldir. / Bkz. Sayfa “526” İçten su vermeli montaj vidaları için.

Size Designation	Master Insert*	Spare Parts		
		Screw	Torx Key	Screw Torque Value N·m
D40 - D63	RPMT 10T3..	SSV M3x8-9508	STK-T08-9908	1,9
D40 - D80	RPMT 1204..	SSV M4x10-9514	STK-T15-9910	3,9
D63 - D125	RPMT 1605..	SSV M5x13-9519	STK-T20-9911	5,5

*Suitable Insert brand is KYCR

COPY MILLING TOOLS

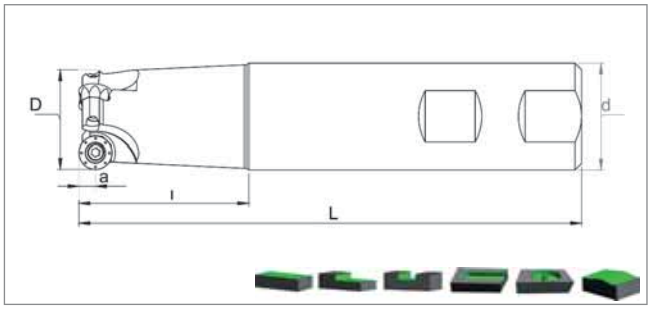

Ordering Code	Item Designation	Dimensions (mm)							Master Insert*
	ST QPMT 10T3.. / 1204..		*D*	*d*	*Z*	*L*	*l*	*a*	
SM22935	ST QP10 D25 W25 L150 Z02	-	25	25	2	150	40	5	QPMT 10T3..
SM22959	ST QP10 D32 W32 L150 Z03	-	32	32	3	150	40	5	
SM22942	ST QP10 D25 C25 L200 Z02	-	25	25	2	200	50	5	
SM22966	ST QP10 D32 C32 L200 Z03	-	32	32	3	200	50	5	
SM22973	ST QP12 D25 W25 L150 Z02	-	25	25	2	150	40	6	QPMT 1204..

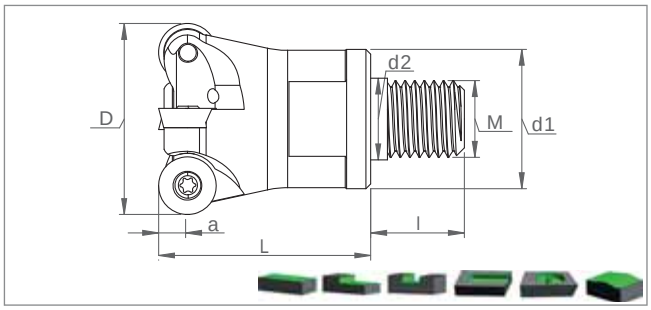

Ordering Code	Item Designation	Dimensions (mm)									Master Insert*
	MT QPMT 10T3..		*D*	*Z*	*d1*	*d2*	*L*	*l*	*M*	*a*	
SM23932	MT QP10T3 D25 M12 L35 Z03-H	✓	25	3	21	12.5	35	23	12	5	QPMT 10T3..
SM23949	MT QP10T3 D32 M16 L43 Z03-H	✓	32	3	29	17	43	23	16	5	
SM23956	MT QP10T3 D40 M16 L43 Z04-H	✓	40	4	29	17	43	23	16	5	

Size Designation	Master Insert*	Spare Parts		
		Screw	Torx Key	Screw Torque Value
				N·m
D25 - D32	QPMT 10T3..	SSV M3.5x10-9511	STK-T15-9910	2,7
D25	QPMT 1204..	SSV M4x10-9514		3,9

*Suitable Insert brand is SMTM

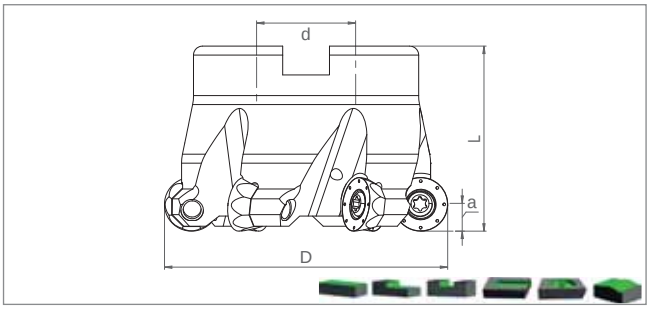

Ordering Code	Item Designation	Dimensions (mm)						Master Insert*
	TK QPMT 10T3.. / 1204..		*D*	*Z*	*d*	*L*	*a*	
SM28326	TK QP10T3 D40 A16 Z04-H	✓	40	4	16	40	5	QPMT 10T3..
SM28319	TK QP10T3 D50 A22 Z05-H	✓	50	5	22	40	5	
SM28302	TK QP10T3 D63 A22 Z06-H	✓	63	6	22	40	5	
SM22652	TK QP10T3 D80 A27 Z07-H	✓	80	7	27	50	5	
SM22669	TK QP1204 D63 A22 Z06-H	✓	63	6	22	40	6	QPMT 1204..
SM22676	TK QP1204 D80 A27 Z07-H	✓	80	7	27	50	6	
SM22683	TK QP1204 D100 A32 Z09-H	✓	100	9	32	50	6	

Cooling mounting screw is optional / See Page “526” for cooling mounting screws.
İçten su vermeli montaj vidaları opsiyoneldir. / Bkz. Sayfa “526” İçten su vermeli montaj vidaları için.

Size Designation	Master Insert*	Spare Parts		
		Screw	Torx Key	Screw Torque Value
				N·m
D40 - D80	QPMT 10T3..	SSV M3.5x10-9511	STK-T15-9910	2,7
D63 - D100	QPMT 1204..	SSV M4x10-9514		3,9

*Suitable Insert brand is SMTM

COPY MILLING TOOLS

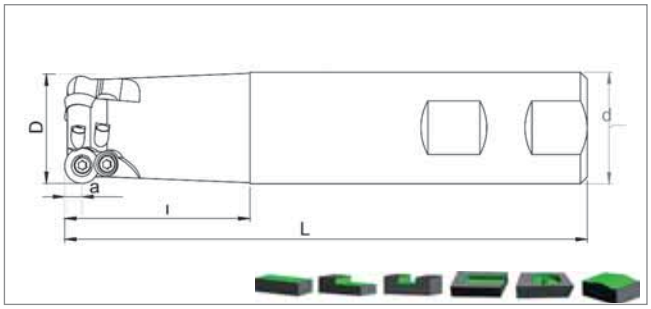

Ordering Code	Item Designation	Dimensions (mm)							Master Insert*
	ST RCKT 1204..		*D*	*d*	*Z*	*L*	*l*	*a*	
SM51539	ST RC1204S D28 W25 L150 Z02-H	✓	28	25	2	150	30	6	RCKT 1204..
SM51546	ST RC1204S D32 W32 L150 Z03-H	✓	32	32	3	150	40	6	
SM39940	ST RC1204S D33 W32 L150 Z03	-	33	32	3	150	30	6	
SM51553	ST RC1204S D35 W32 L150 Z03-H	✓	35	32	3	150	30	6	

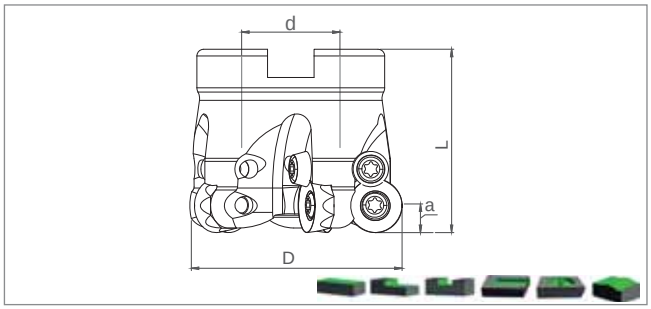

Ordering Code	Item Designation	Dimensions (mm)						Master Insert*
	TK RCKT 1204..		*D*	*Z*	*d*	*L*	*a*	
SM33696	TK RC1204S D50 A22 Z05-H	✓	50	5	22	40	6	RCKT 1204..
SM33719	TK RC1204S D63 A22 Z06-H	✓	63	6	22	40	6	
SM33733	TK RC1204S D80 A27 Z07-H	✓	80	7	27	50	6	

Cooling mounting screw is optional / See Page “526” for cooling mounting screws.
İçten su vermeli montaj vidaları opsiyoneldir. / Bkz. Sayfa “526” İçten su vermeli montaj vidaları için.

Size Designation	Master Insert*	Spare Parts				
		Screw	Torx Key	Wedge Clamp	Clamp Screw	Screw Torque Value
						N·m
D28 - D80	RCKT 1204..	SSV M3.5x10-9511	STK-T15-9910	RDTP 9124	SSV M3.5x11 9532	2,7

*Suitable Insert brand is SNDVK

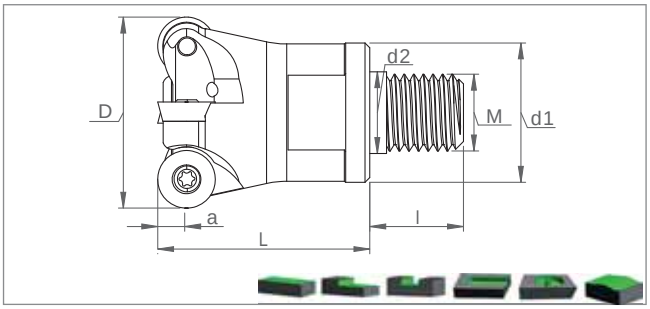

Ordering Code	Item Designation	Dimensions (mm)									Master Insert*
	MT RPNX 10T3.. / 1204..		*D*	*Z*	*d1*	*d2*	*L*	*l*	*M*	*a*	
SM38936	MT RP10 D25 M12 L35 Z02-H	✓	25	2	21	12.5	35	23	12	5	RPNX 10T3..
SM38943	MT RP10 D30 M16 L43 Z03-H	✓	30	3	29	17	43	23	16	5	
SM38981	MT RP10 D32 M16 L43 Z03-H	✓	32	3	29	17	43	23	16	5	
SM38998	MT RP10 D35 M16 L43 Z04-H	✓	35	4	29	17	43	23	16	5	
SM39001	MT RP10 D40 M16 L43 Z04-H	✓	40	4	29	17	43	23	16	5	
SM39018	MT RP10 D42 M16 L43 Z04-H	✓	42	4	29	17	43	23	16	5	
SM39032	MT RP12 D32 M16 L43 Z03-H	✓	32	3	29	17	43	23	16	6	RPNX 1204..
SM39049	MT RP12 D35 M16 L43 Z03-H	✓	35	3	29	17	43	23	16	6	
SM39056	MT RP12 D40 M16 L43 Z04-H	✓	40	4	29	17	43	23	16	6	
SM39063	MT RP12 D42 M16 L43 Z04-H	✓	42	4	29	17	43	23	16	6	

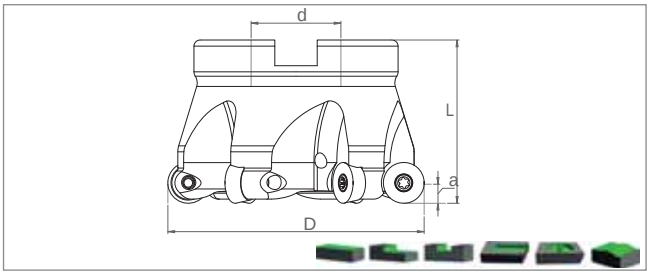

Ordering Code	Item Designation	Dimensions (mm)						Master Insert*
	TK RPNX 10T3.. / 1204..		*D*	*Z*	*d*	*L*	*a*	
SM33535	TK RP10 D40 A16 Z04-H	✓	40	4	16	40	5	RPNX 10T3..
SM33559	TK RP10 D50 A22 Z05-H	✓	50	5	22	40	5	
SM33573	TK RP10 D63 A22 Z06-H	✓	63	6	22	40	5	
SM33597	TK RP10 D80 A27 Z07-H	✓	80	7	27	50	5	
SM33610	TK RP12 D50 A22 Z05-H	✓	50	5	22	40	6	RPNX 1204..
SM61972	TK RP12 D52 A22 Z05-H	✓	52	5	22	40	6	
SM33634	TK RP12 D63 A22 Z06-H	✓	63	6	22	40	6	
SM33658	TK RP12 D80 A27 Z07-H	✓	80	7	27	50	6	
SM33672	TK RP12 D100 A32 Z08-H	✓	100	8	32	50	6	

Size Designation	Master Insert*	Spare Parts		
		Screw	Torx Key	Screw Torque Value N·m
D25 - D80	RPNX 10T3..	SSV M3x8-9508	STK-T08-9908	1,9
D32 - D100	RPNX 1204..	SSV M3.5x10-9511	STK-T15-9910	2,7

*Suitable Insert brand is CRTZ

BALL NOSE END MILLS

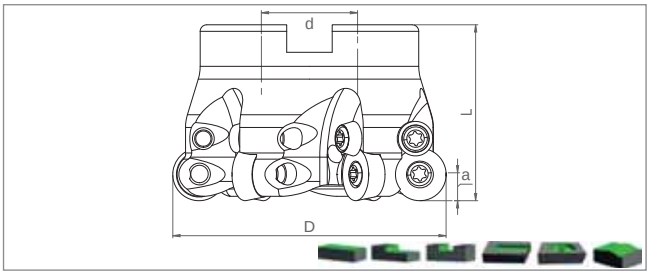

Ordering Code	Item Designation	Dimensions (mm)						Master Insert*
	TK RCKT 10T3.. / 1204..		*D*	*Z*	*d*	*L*	*a*	
SM33429	TK RC10 D40 A16 Z04-H	✓	40	4	16	40	5	RCKT 10T3..
SM34747	TK RC10 D50 A22 Z05-H	✓	50	5	22	40	5	
SM33450	TK RC10 D63 A22 Z06-H	✓	63	6	22	40	5	
SM33474	TK RC12 D50 A22 Z05-H	✓	50	5	22	40	6	RCKT 1204..
SM33498	TK RC12 D63 A22 Z06-H	✓	63	6	22	40	6	
SM33511	TK RC12 D80 A27 Z07-H	✓	80	7	27	50	6	

Size Designation	Master Insert*	Spare Parts				
		Screw	Torx Key	Wedge Clamp	Clamp Screw	Screw Torque Value
						N·m
D40 - D63	RCKT 10T3..	SSV M3.5x10-9511	STK-T15-9910	RDTP 9124	SSV M3.5x11-9532	2,7
D50 - D80	RCKT 1204					

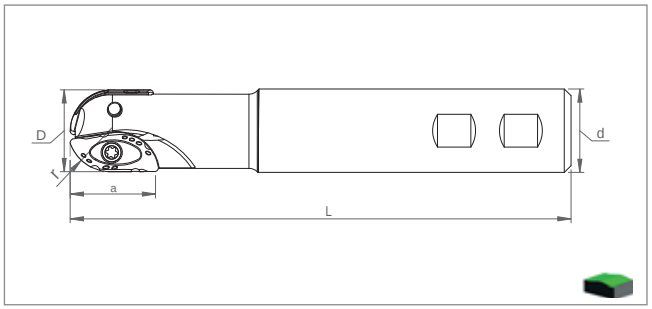

Ordering Code	Item Designation	Dimensions (mm)								Master Insert*
	SRT XPHT16R0803 / 20R10T3 / 25R1204		*D*	*R*	*L*	*d*	*l*	*a*	*Z*	
SM60821	SRT XP16 D16 C16 L150 Z02-H	✓	16	8	150	16	40	16	2	XPHT16R0803
SM60838	SRT XP20 D20 C20 L150 Z02-H	✓	20	10	150	20	45	20	2	XPHT20R10T3
SM60845	SRT XP25 D25 C25 L150 Z02-H	✓	25	12.5	150	25	55	25	2	XPHT25R1204

Size Designation	Master Insert*	Spare Parts		
		Screw	Torx Key	Screw Torque Value
				N·m
D16	XPHT16R0803	SSV M2.5x6-9505	STK-T08-9908	1,0
D20	XPHT20R10T3	SSV M3.5x8-SC-9513	STK-T10-9909	2,7
D25	XPHT25R1204	SSV M4x9x5-9528	STK-T15-9910	3,9

*Suitable Insert brand is ZCC-CT

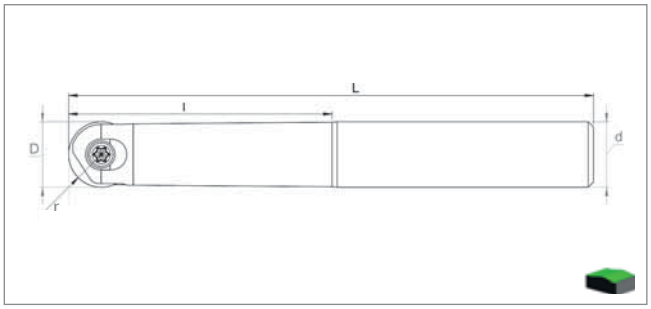

Ordering Code	Item Designation	Dimensions (mm)						Master Insert*
	SRT P3208 / P3210 / P3212 P3216 / P3220 / P3225 / P3232		*D*	*r*	*L*	*d*	*l*	
SM19898	SRT P3208 D08 L110 d10	-	8	4	110	10	25	P3208
SM39599	SRT P3210 D10 L130 d10	-	10	5	130	10	30	P3210
SM14886	SRT P3210 D10 L130 d12	-	10	5	130	12	30	
SM14893	SRT P3212 D12 L130 d12	-	12	6	130	12	32	P3212
SM14909	SRT P3216 D16 L175 d16	-	16	8	175	16	60	P3216
SM14916	SRT P3220 D20 L200 d20	-	20	10	200	20	75	P3220
SM14923	SRT P3225 D25 L200 d25	-	25	12.5	200	25	75	P3225
SM14930	SRT P3232 D32 L200 d32	-	32	16	200	32	75	P3232

Size Designation	Master Insert*	Spare Parts		
		Screw	Torx Key	Allen Key
D08	P3208	TC170 M3x0.5x7-9801	STK-T08-9908	-
D10	P3210	TC172 M4x0.5x8-9802	STK-T15-9910	-
D12	P3212	TC174 M5x0.5x9-9803	STK-T20-9911	-
D16	P3216	TC176 M5x0.5x13-9804	STK-T20-9911	-
D20	P3220	TC178 M5x0.5x17-9805	STK-T20-9911	-
D25	P3225	TC181 M6x0.75x22-9806	-	SAK-AA3-9902
D32	P3232	TC184M 8x0.75x28-9807	-	SAK-AA4-9903

*Suitable Insert brand is WLTR

SMOXH
HTK BL11 D63 A22 Z06-H
SMOXH
HTK EN10 D63 A22 Z09-H
SMOXH
SMOXH
HTK EN06 D63 A22 Z07-H
SMOXH
HTK S1009 D63 A22 Z06-H
SMOXH

www.smoxh.com.tr

High Feed Milling Tools

H

▸ **High Feed** Milling Tools

Rising Power of Quality

Insert			BLMP 0402.. TGTC	BLMP 0603.. TGTC	BLMP 0904.. TGTC	BLMP 1105.. TGTC	LNMU 0202.. TNGLY	LNMU 0303.. TNGLY	LNMU 06X5.. TNGLY	ENMU 1004.. DJT
Page			**H398**	**H398-H399**	**H398-H399**	**H398-H399**	**H400-H401**	**H400-H401**	**H400-H401**	**H402**
Dimeter Range (mm)			Ø10-21	Ø16-50	Ø25-100	Ø40-66	Ø08-16	Ø16-50	Ø32-63	Ø16-63
Approach Angle			-°	-°	-°	-°	-°	-°	-°	-°
Max. Cutting Depth			0.5mm	1mm	1.5mm	2mm	0.5mm	1mm	1.5mm	1.7mm
Holder Type	Endmills		✓ Dia Range (mm) Ø10-21	✓ Dia Range (mm) Ø16-32	✓ Dia Range (mm) Ø26-33	-	✓ Dia Range (mm) Ø08-16	✓ Dia Range (mm) Ø16-33	✓ Dia Range (mm) Ø32-35	✓ Dia Range (mm) Ø16-32
Holder Type	Modular Mills		✓ Dia Range (mm) Ø10-20	✓ Dia Range (mm) Ø16-42	✓ Dia Range (mm) Ø25-40	-	✓ Dia Range (mm) Ø10-16	✓ Dia Range (mm) Ø16-40	-	✓ Dia Range (mm) Ø16-25
Holder Type	Face Mills		-	✓ Dia Range (mm) Ø40-50	✓ Dia Range (mm) Ø40-100	✓ Dia Range (mm) Ø40-66	-	✓ Dia Range (mm) Ø40-50	✓ Dia Range (mm) Ø50-63	✓ Dia Range (mm) Ø40-63
Application	Face Milling		✓	✓	✓	✓	✓	✓	✓	✓
Application	Shoulder Milling		✓	✓	✓	✓	✓	✓	✓	✓
Application	Slot Milling		-	-	-	-	-	-	-	-
Application	Plunging		✓	✓	✓	✓	✓	✓	✓	✓
Application	Helical Interpolation		✓	✓	✓	✓	✓	✓	✓	✓
Application	Plunging		-	-	-	-	-	-	-	-
Application	Profile Milling	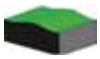	✓	✓	✓	✓	✓	✓	✓	✓
Application										
Application										

Insert			LNMX 0604 ACHTECK	LNMX 1005 ACHTECK	YPHW ZPHT EP..1003 DJT	BNGX 10T3.. PRMT	ENMX 0604.. YG-1	ENMX 0905.. YG-1	LPMT 0402.. KRLY	LPGT 0102.. KYCR	LOGU 0303.. KYCR	LOHT 0603.. SCO
Page			H404-H405	H404-H405	H403	H408	H406-H407	H406-H407	H411	H415	H412-H413	H414
Dimeter Range (mm)			Ø16-40	Ø26-63	Ø16-32	Ø16-50	Ø16-80	Ø25-66	Ø10-14	Ø10-21	Ø16-63	Ø20-63
Approach Angle			-°	-°	-°	-°	-°	-°	-°	-°	-°	-°
Max. Cutting Depth			1mm	2mm	1mm	1.5mm	0.9 - 1mm	1.5mm	0.4mm	0.5mm	1mm	0.9mm
Holder Type	Endmills		✓ Dia Range (mm) Ø16-26	✓ Dia Range (mm) Ø26-35	✓ Dia Range (mm) Ø16-32	✓ Dia Range (mm) Ø16-32	✓ Dia Range (mm) Ø16-33	✓ Dia Range (mm) Ø25-40	✓ Dia Range (mm) Ø10-14	✓ Dia Range (mm) Ø10-21	✓ Dia Range (mm) Ø16-33	✓ Dia Range (mm) Ø20-32
Holder Type	Modular Mills		✓ Dia Range (mm) Ø20-25	✓ Dia Range (mm) Ø32-33	✓ Dia Range (mm) Ø16-25	✓ Dia Range (mm) Ø16-32	✓ Dia Range (mm) Ø16-42	✓ Dia Range (mm) Ø25-40	-	-	✓ Dia Range (mm) Ø16-42	✓ Dia Range (mm) Ø20-32
Holder Type	Face Mills		-	✓ Dia Range (mm) Ø50-63	-	✓ Dia Range (mm) Ø16-32	✓ Dia Range (mm) Ø40-80	✓ Dia Range (mm) Ø40-66	-	-	✓ Dia Range (mm) Ø40-63	✓ Dia Range (mm) Ø40-63
Application	Face Milling		✓	✓	✓	✓	✓	✓	✓	✓	✓	✓
Application	Shoulder Milling		✓	✓	✓	✓	✓	✓	✓	✓	✓	✓
Application	Slot Milling		-	-	-	-	-	-	-	-	-	-
Application	Plunging		✓	✓	✓	✓	✓	✓	✓	✓	✓	✓
Application	Helical Interpolation		✓	✓	✓	✓	✓	✓	✓	✓	✓	✓
Application	Plunging		-	-	-	-	-	-	-	-	-	-
Application	Profile Milling	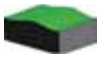	✓	✓	✓	✓	✓	✓	✓	✓	✓	✓
Application												
Application												

Insert			LNMX 0402.. KRLY	LNMX 0603.. KRLY	LSMT 0202.. TNGLY	WNMX 0603.. KRLY	WNMX 09T3.. KRLY	JOMT 06T2.. MTSBH	JOMT 0803.. MTSBH	JDM. 09T3.. MTSBH	JDM. 1204.. MTSBH
Page			**H409**	**H409**	**H410**	**H416-H417**	**H416-H417**	**H418-H419**	**H418-H419**	**H418-H419**	**H418-H419**
Dimeter Range (mm)			Ø10-16	Ø16-26	Ø10-14	Ø17-33	Ø25-66	Ø16-22	Ø17-50	Ø25-50	Ø50-63
Approach Angle			-°	-°	-°	-°	-°	-°	-°	-°	-°
Max. Cutting Depth			0.5mm	0.7 - 1mm	0.5mm	1mm	1.5mm	1mm	1.5mm	1.5mm	2mm
Holder Type	Endmills		✓ Dia Range (mm) Ø10-16	✓ Dia Range (mm) Ø16-26	✓ Dia Range (mm) Ø10-14	✓ Dia Range (mm) Ø17-33	✓ Dia Range (mm) Ø25-40	✓ Dia Range (mm) Ø16-22	✓ Dia Range (mm) Ø17-26	✓ Dia Range (mm) Ø25-33	-
Holder Type	Modular Mills		-	-	-	✓ Dia Range (mm) Ø20-32	✓ Dia Range (mm) Ø25-42	-	✓ Dia Range (mm) Ø25-35	✓ Dia Range (mm) Ø25-35	-
Holder Type	Face Mills		-	-	-	-	✓ Dia Range (mm) Ø40-66	-	✓ Dia Range (mm) Ø40-50	✓ Dia Range (mm) Ø40-50	✓ Dia Range (mm) Ø50-63
Application	Face Milling		✓	✓	✓	✓	✓	✓	✓	✓	✓
Application	Shoulder Milling		✓	✓	✓	✓	✓	✓	✓	✓	✓
Application	Slot Milling		-	-	-	-	-	-	-	-	-
Application	Plunging		✓	✓	✓	✓	✓	✓	✓	✓	✓
Application	Helical Interpolation		✓	✓	✓	✓	✓	✓	✓	✓	✓
Application	Plunging		-	-	-	-	-	-	-	-	-
Application	Profile Milling	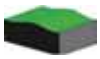	✓	✓	✓	✓	✓	✓	✓	✓	✓
Application											
Application											

Insert			WXMT 0302.. ISC	WDMT 0603.. SMTM	WDMT 0804.. SMTM	WDMT 1204.. SMTM	WDMW 06T3.. DJT	WDMW 0805.. DJT	WDMW 10X6.. DJT
Page			**H410**	**H420**	**H420**	**H421**	**H422**	**H422**	**H422**
Dimeter Range (mm)			Ø10-16	Ø16-22	Ø20-50	Ø50-63	Ø25-50	Ø50-63	Ø125-160
Approach Angle			-°	-°	-°	-°	-°	-°	-°
Max. Cutting Depth			0.6mm	1mm	1.5mm	2mm	1.5mm	2mm	2.5mm
Holder Type	Endmills		✓ Dia Range (mm) Ø10-16	✓ Dia Range (mm) Ø16-22	✓ Dia Range (mm) Ø20-33	-	✓ Dia Range (mm) Ø25-32	-	-
Holder Type	Modular Mills		-	-	✓ Dia Range (mm) Ø25-35	-	-	-	-
Holder Type	Face Mills		-	-	✓ Dia Range (mm) Ø40-50	✓ Dia Range (mm) Ø50-63	✓ Dia Range (mm) Ø40-50	✓ Dia Range (mm) Ø50-63	✓ Dia Range (mm) Ø125-160
Application	Face Milling		✓	✓	✓	✓	✓	✓	✓
Application	Shoulder Milling		✓	✓	✓	✓	✓	✓	✓
Application	Slot Milling		-	-	-	-	-	-	-
Application	Plunging		✓	✓	✓	✓	✓	✓	✓
Application	Helical Interpolation		✓	✓	✓	✓	✓	✓	✓
Application	Plunging		-	-	-	-	-	-	-
Application	Profile Milling	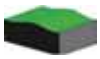	✓	✓	✓	✓	✓	✓	✓
Application									
Application									

Insert			WOM. 04T2.. DJT	WXCU 0705..	WOEJ 0905.. KNMT	218.21 SCO	WNMU 0907.. DJT	SDMT 09T3.. ZCC
Page			**H423**	**H424**	**G423**	**H425**	**H425**	**H426**
Dimeter Range (mm)			Ø16-20	Ø25-63	Ø40-63	Ø50-100	Ø63-66	Ø25-63
Approach Angle			-°	-°	-°	-°	-°	-°
Max. Cutting Depth			1.2mm	1.5mm	1.6mm	1.8mm	2.25mm	1.4mm
Holder Type	Endmills		✓ Dia Range (mm) Ø16-20	✓ Dia Range (mm) Ø25-32	-	-	-	✓ Dia Range (mm) Ø25-35
Holder Type	Modular Mills		✓ Dia Range (mm) Ø16-20	-	-	-	-	✓ Dia Range (mm) Ø25-40
Holder Type	Face Mills		-	✓ Dia Range (mm) Ø40-63	✓ Dia Range (mm) Ø40-63	✓ Dia Range (mm) Ø50-100	✓ Dia Range (mm) Ø63-66	✓ Dia Range (mm) Ø40-63
Application	Face Milling		✓	✓	✓	✓	✓	✓
Application	Shoulder Milling		✓	✓	✓	✓	✓	✓
Application	Slot Milling		-	-	-	-	-	-
Application	Plunging		✓	✓	✓	✓	✓	✓
Application	Helical Interpolation		✓	✓	✓	✓	✓	✓
Application	Plunging		-	-	-	-	-	-
Application	Profile Milling	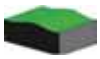	✓	✓	✓	✓	✓	✓
Application								
Application								

Insert			SDMT 1204.. ZCC	SDKX 0904.. LMN	SDKX 1205.. LMN	SDKX 1204.. YG-1	XPLX 0603.. CRTZ	XDLX 09T3.. CRTZ	R210.09 SNDVK	XDLX 09T3.. CRTZ
Page			**H426**	**H428**	**H428**	**H427**	**H430**	**H430-H431**	**H432-H433**	**H431**
Dimeter Range (mm)			Ø50-63	Ø25-63	Ø50-63	Ø32-66	Ø16-22	Ø25-63	Ø25-63	Ø40-63
Approach Angle			-°	-°	-°	-°	-°	-°	-°	-°
Max. Cutting Depth			1.8mm	1.4mm	1.8mm	1.8mm	1mm	1.2mm	1.2mm	1.2mm
Holder Type	Endmills		-	✓ Dia Range (mm) Ø25-32	-	✓ Dia Range (mm) Ø32-40	✓ Dia Range (mm) Ø16-21	✓ Dia Range (mm) Ø25-26	✓ Dia Range (mm) Ø25-33	-
Holder Type	Modular Mills		-	✓ Dia Range (mm) Ø25-40	-	✓ Dia Range (mm) Ø32-40	✓ Dia Range (mm) Ø16-22	✓ Dia Range (mm) Ø25-42	✓ Dia Range (mm) Ø25-35	-
Holder Type	Face Mills		✓ Dia Range (mm) Ø50-63	✓ Dia Range (mm) Ø40-63	✓ Dia Range (mm) Ø50-63	✓ Dia Range (mm) Ø50-66	-	✓ Dia Range (mm) Ø40-63	✓ Dia Range (mm) Ø40-63	✓ Dia Range (mm) Ø40-63
Application	Face Milling		✓	✓	✓	✓	✓	✓	✓	✓
Application	Shoulder Milling		✓	✓	✓	✓	✓	✓	✓	✓
Application	Slot Milling		-	-	-	-	-	-	-	-
Application	Plunging		✓	✓	✓	✓	✓	✓	✓	✓
Application	Helical Interpolation		✓	✓	✓	✓	✓	✓	✓	✓
Application	Plunging		-	-	-	-	-	-	-	-
Application	Profile Milling		✓	✓	✓	✓	✓	✓	✓	✓
Application										
Application										

Insert			SWMT 0904.. TNGLY	SWMT 1506.. TNGLY	SP.. 1004.. DJT	SP.. 1405.. DJT	SPEW 2006.. DJT	SOMT 1004.. KYCR	SOMT 1405.. KYCR
Page			**H434-H435**	**H435**	**H436-H437**	**H437**	**H437**	**H439-H440**	**H439**
Dimeter Range (mm)			Ø25-32	Ø63-80	Ø25-63	Ø50-63	Ø50-63	Ø32-63	Ø50-160
Approach Angle			-°	-°	-°	-°	-°	-°	-°
Max. Cutting Depth			1mm	2mm	1.6mm	2.05mm	2.45mm	1.2mm	2.7mm
Holder Type	Endmills		✓ Dia Range (mm) Ø16-20	-	✓ Dia Range (mm) Ø25-32	-	-	-	-
Holder Type	Modular Mills		✓ Dia Range (mm) Ø16-20	-	✓ Dia Range (mm) Ø25-32	-	-	-	-
Holder Type	Face Mills		✓ Dia Range (mm) Ø40-63	✓ Dia Range (mm) Ø63-80	✓ Dia Range (mm) Ø40-63	✓ Dia Range (mm) Ø50-63	✓ Dia Range (mm) Ø50-63	✓ Dia Range (mm) Ø63-66	✓ Dia Range (mm) Ø50-160
Application	Face Milling		✓	✓	✓	✓	✓	✓	✓
Application	Shoulder Milling		✓	✓	✓	✓	✓	✓	✓
Application	Slot Milling		-	-	-	-	-	-	-
Application	Plunging		✓	✓	✓	✓	✓	✓	✓
Application	Helical Interpolation		✓	✓	✓	✓	✓	✓	✓
Application	Plunging		-	-	-	-	-	-	-
Application	Profile Milling	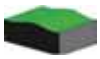	✓	✓	✓	✓	✓	✓	✓

Insert			ZDCW 09T3.. PRMT	ZDCW 1204.. PRMT	SPKT 08T3.. PLBT	XPLT 0603.. KNMTL	XDLT 0904.. KNMTL	SQMU 1206.. TNGLY
Page			**H440-H441**	**H441**	**H442-H443**	**H444**	**H444**	**H445**
Dimeter Range (mm)			Ø25-50	Ø25-63	Ø20-63	Ø16-32	Ø25-63	Ø50-63
Approach Angle			-°	-°	-°	-°	-°	-°
Max. Cutting Depth			1.3mm	1.4mm	1.5mm	0.9mm	1.45mm	2mm
Holder Type	Endmills		✓ Dia Range (mm) Ø25-32	-	✓ Dia Range (mm) Ø20-32	✓ Dia Range (mm) Ø16-32	✓ Dia Range (mm) Ø25-40	-
Holder Type	Modular Mills		✓ Dia Range (mm) Ø25-35	-	✓ Dia Range (mm) Ø25-42	-	-	-
Holder Type	Face Mills		✓ Dia Range (mm) Ø40-50	✓ Dia Range (mm) Ø50-63	✓ Dia Range (mm) Ø40-63	-	✓ Dia Range (mm) Ø40-63	✓ Dia Range (mm) Ø50-63
Application	Face Milling		✓	✓	✓	✓	✓	✓
Application	Shoulder Milling		✓	✓	✓	✓	✓	✓
Application	Slot Milling		-	-	-	-	-	-
Application	Plunging		✓	✓	✓	✓	✓	✓
Application	Helical Interpolation		✓	✓	✓	✓	✓	✓
Application	Plunging		-	-	-	-	-	-
Application	Profile Milling	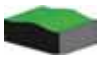	✓	✓	✓	✓	✓	✓
Application								
Application								

HIGH FEED MILLING TOOLS

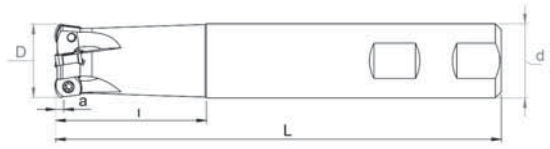

Ordering Code	Item Designation	Dimensions (mm)							Master Insert*
	HST BLMP 0402.. / 0603.. / 0904.. / 1105..		*D*	*d*	*Z*	*L*	*l*	*a*	
SM71148	**HST BL04 D10 C09 L100 Z02-H**	✓	**10**	**9**	**2**	**100**	**20**	**0.5**	BLMP 0402..
SM71155	**HST BL04 D11 C10 L100 Z02-H**	✓	**11**	**10**	**2**	**100**	**20**	**0.5**	
SM71162	**HST BL04 D12 C11 L100 Z02-H**	✓	**12**	**11**	**2**	**100**	**20**	**0.5**	
SM71179	**HST BL04 D13 C12 L100 Z03-H**	✓	**13**	**12**	**3**	**100**	**20**	**0.5**	
SM71186	**HST BL04 D17 C16 L100 Z04-H**	✓	**17**	**16**	**4**	**100**	**30**	**0.5**	
SM71193	**HST BL04 D21 C20 L100 Z05-H**	✓	**21**	**20**	**5**	**100**	**30**	**0.5**	
SM34921	HST BL06 D16 W16 L120 Z02-H	✓	16	16	2	120	30	0.7	BLMP 0603..
SM62719	**HST BL06 D16 W16 L150 Z02-H**	✓	**16**	**16**	**2**	**150**	**30**	**0.7**	
SM62382	**HST BL06 D16 C15 L150 Z02-H**	✓	**16**	**15**	**2**	**150**	**30**	**0.7**	
SM00685	HST BL06 D17 W16 L150 Z02-H	✓	17	16	2	150	30	1	
SM34938	HST BL06 D20 W20 L150 Z03-H	✓	20	20	3	150	40	1	
SM79007	**HST BL06 D20 C19 L150 Z03-H**	✓	**20**	**19**	**3**	**150**	**40**	**1**	
SM34983	HST BL06 D20 C20 L200 Z03	-	20	20	3	200	50	1	
SM00692	HST BL06 D21 W20 L150 Z03-H	✓	21	20	3	150	30	1	
SM62399	**HST BL06 D21 C20 L200 Z03-H**	✓	**21**	**20**	**3**	**200**	**30**	**1**	
SM34945	HST BL06 D25 W25 L150 Z04-H	✓	25	25	4	150	40	1	
SM34976	HST BL06 D25 C25 L200 Z04	-	25	25	4	200	50	1	
SM00708	HST BL06 D26 W25 L150 Z04-H	✓	26	25	4	150	30	1	
SM34952	HST BL06 D32 W32 L150 Z05-H	✓	32	32	5	150	40	1	
SM34990	HST BL06 D32 C32 L200 Z05	-	32	32	5	200	50	1	
SM60807	HST BL06 D35 W32 L150 Z05-H	✓	32	32	5	150	30	1	
SM58859	HST BL09 D25 W25 L150 Z03-H	✓	25	25	3	150	40	1.5	BLMP 0904..
SM58866	HST BL09 D26 W25 L150 Z03-H	✓	26	25	3	150	30	1.5	
SM58873	HST BL09 D32 W32 L150 Z04-H	✓	32	32	4	150	40	1.5	
SM58880	HST BL09 D33 W32 L150 Z04-H	✓	33	32	4	150	30	1.5	
SM59030	HST BL11 D33 W32 L150 Z02-H	✓	33	32	2	150	30	2	BLMP 1105..
SM59047	HST BL11 D35 W32 L150 Z03-H	✓	35	32	3	150	30	2	

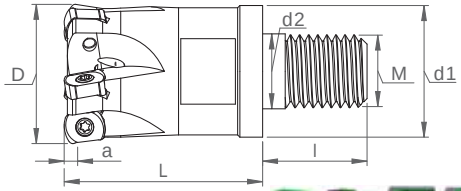

Ordering Code	Item Designation	Dimensions (mm)									Master Insert*
	MHT BLMP 0402.. / 0603.. / 0904..		*D*	*Z*	*d1*	*d2*	*L*	*l*	*M*	*a*	
SM71209	**MHT BL04 D10 M06 L17 Z02-H**	✓	**10**	**2**	**9.2**	**6.5**	**17**	**14.5**	**6**	**0.5**	BLMP 0402..
SM71216	**MHT BL04 D12 M06 L17 Z02-H**	✓	**12**	**2**	**11.2**	**6.5**	**17**	**14.5**	**6**	**0.5**	
SM71223	**MHT BL04 D16 M08 L25 Z04-H**	✓	**16**	**4**	**15**	**8.5**	**25**	**17**	**8**	**0.5**	
SM71230	**MHT BL04 D20 M10 L30 Z05-H**	✓	**20**	**5**	**18**	**10.5**	**30**	**19**	**10**	**0.5**	
SM36673	MHT BL06 D16 M08 L25 Z02-H	✓	16	2	15	8.5	25	17	8	0.7	BLMP 0603..
SM36697	MHT BL06 D20 M10 L30 Z03-H	✓	20	3	18	10.5	30	19	10	1	
SM36710	MHT BL06 D25 M12 L35 Z04-H	✓	25	4	21	12.5	35	23	12	1	
SM36727	MHT BL06 D32 M16 L43 Z05-H	✓	32	5	29	17	43	23	16	1	
SM47730	MHT BL06 D35 M16 L43 Z05-H	✓	35	5	29	17	43	23	16	1	
SM00838	MHT BL06 D40 M16 L43 Z06-H	✓	40	6	29	17	43	23	16	1	
SM64614	**MHT BL09 D42 M16 L43 Z05-H**	✓	**42**	**5**	**29**	**17**	**43**	**23**	**16**	**1**	
SM56633	MHT BL06 D42 M16 L43 Z06-H	✓	42	6	29	17	43	23	16	1	
SM58897	MHT BL09 D25 M12 L35 Z03-H	✓	25	3	21	12.5	35	23	12	1.5	BLMP 0904..
SM58903	MHT BL09 D32 M16 L43 Z04-H	✓	32	4	29	17	43	23	16	1.5	
SM58910	MHT BL09 D35 M16 L43 Z04-H	✓	35	4	29	17	43	23	16	1.5	
SM58927	MHT BL09 D40 M16 L43 Z05-H	✓	40	5	29	17	43	23	16	1.5	

*Suitable Insert brand is TGTC

SMOXH CUTTING TOOLS
Kalitenin Yükselen Gücü

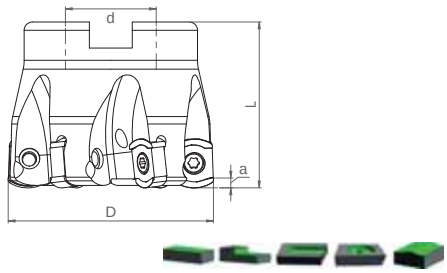

Ordering Code	Item Designation	Dimensions (mm)						Master Insert*
	HTK BLMP 0603.. / 0904.. / 1105..		*D*	*Z*	*d*	*L*	*a*	
SM38967	HTK BL06 D40 A16 Z06-H	✓	40	6	16	40	1	BLMP 0603..
SM64805	**HTK BL06 D42 A16 Z06-H**	✓	**42**	**6**	**16**	**40**	**1**	
SM33177	HTK BL06 D50 A22 Z07-H	✓	50	7	22	40	1	
SM64812	**HTK BL06 D52 A22 Z08-H**	✓	**52**	**8**	**22**	**40**	**1**	
SM64829	**HTK BL06 D63 A22 Z09-H**	✓	**63**	**9**	**22**	**40**	**1**	
SM64836	**HTK BL06 D66 A27 Z10-H**	✓	**66**	**10**	**27**	**50**	**1**	
SM28050	HTK BL09 D40 A16 Z05-H	✓	40	5	16	40	1.5	BLMP 0904..
SM64843	**HTK BL09 D42 A16 Z05-H**	✓	**42**	**5**	**16**	**40**	**1.5**	
SM28043	HTK BL09 D50 A22 Z06-H	✓	50	6	22	40	1.5	
SM63426	**HTK BL09 D52 A22 Z06-H**	✓	**52**	**6**	**22**	**40**	**1.5**	
SM22607	HTK BL09 D63 A22 Z07-H	✓	63	7	22	40	1.5	
SM61750	HTK BL09 D66 A27 Z08-H	✓	66	8	27	50	1.5	
SM63433	**HTK BL09 D80 A27 Z10-H**	✓	**80**	**10**	**27**	**50**	**1.5**	
SM63440	**HTK BL09 D100 A32 Z12-H**	✓	**100**	**12**	**32**	**50**	**1.5**	
SM54561	HTK BL11 D40 A16 Z04-H	✓	40	4	16	40	2	BLMP 1105..
SM54578	HTK BL11 D50 A22 Z05-H	✓	50	5	22	40	2	
SM54585	HTK BL11 D52 A22 Z05-H	✓	52	5	22	40	2	
SM54592	HTK BL11 D63 A22 Z06-H	✓	63	6	22	40	2	
SM54608	HTK BL11 D66 A27 Z06-H	✓	66	6	27	50	2	

Cooling mounting screw is optional / See Page “526” for cooling mounting screws.
İçten su vermeli montaj vidaları opsiyoneldir. / Bkz. Sayfa “526” İçten su vermeli montaj vidaları için.

Size Designation	Master Insert*	Spare Parts		
		Screw	Torx Key	Screw Torque Value
				N·m
D16 - D20	BLMP 0603..	SSV M2.5x6-9505	STK-T08-9908	1,0
D21 - D66		SSV M2.5x7-9506		
D25 - D100	BLMP 0904..	SSV M3.5x8-SC-9513	STK-T10-9909	2,7
D32 - D66	BLMP 1105..	SSV M5x13-9519	STK-T20-9911	5,5

*Suitable Insert brand is TGTC

HIGH FEED MILLING TOOLS

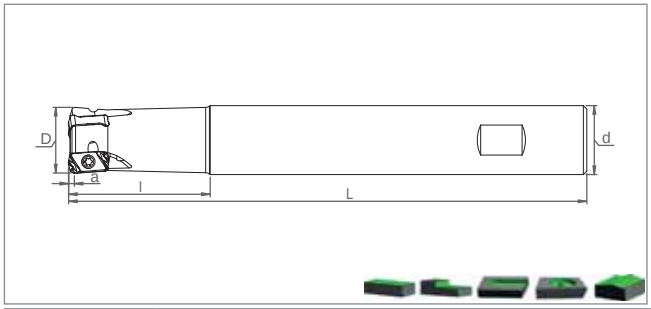

Ordering Code	Item Designation		Dimensions (mm)						Master Insert*
	HST LNMU 0202.. / 0303..		*D*	*d*	*Z*	*L*	*l*	*a*	
SM71681	**HST LN02 D08 C08 L100 Z01-H**	✓	**8**	**8**	**1**	**100**	**20**	**0.5**	LNMU 0202..
SM78963	**HST LN02 D08 C08 I40 L100 Z01-H**	✓	**8**	**8**	**1**	**100**	**40**	**0.5**	
SM71698	**HST LN02 D10 C10 L100 Z02-H**	✓	**10**	**10**	**2**	**100**	**20**	**0.5**	
SM78970	**HST LN02 D10 C10 I40 L100 Z02-H**	✓	**10**	**10**	**2**	**100**	**40**	**0.5**	
SM71704	**HST LN02 D12 C12 L100 Z02-H**	✓	**12**	**12**	**2**	**100**	**20**	**0.5**	
SM78987	**HST LN02 D12 C12 I40 L100 Z02-H**	✓	**12**	**12**	**2**	**100**	**40**	**0.5**	
SM78901	**HST LN02 D13 C12 L100 Z02-H**	✓	**13**	**12**	**2**	**100**	**20**	**0.5**	
SM78994	**HST LN02 D13 C12 I40 L100 Z02-H**	✓	**13**	**12**	**2**	**100**	**40**	**0.5**	
SM71711	**HST LN02 D16 C16 L100 Z03-H**	✓	**16**	**16**	**3**	**100**	**30**	**0.5**	
SM71728	**HST LN02 D16 C16 L100 Z04-H**	✓	**16**	**16**	**4**	**100**	**30**	**0.5**	
SM45507	HST LN03 D16 W16 L150 Z02-H	✓	16	16	2	150	40	1	LNMU 0303..
SM01385	HST LN03 D17 W16 L150 Z02-H	✓	17	16	2	150	30	1	
SM52871	HST LN03 D17 C16 L200 Z02	-	17	16	2	200	30	1	
SM49741	HST LN03 D18 W16 L150 Z02-H	✓	18	16	2	150	30	1	
SM45514	HST LN03 D20 W20 L150 Z03-H	✓	20	20	3	150	40	1	
SM52833	HST LN03 D21 W20 L150 Z03-H	✓	21	20	3	150	30	1	
SM52888	HST LN03 D21 C20 L200 Z03	-	21	20	3	200	30	1	
SM49758	HST LN03 D22 W20 L150 Z03-H	✓	22	20	3	150	30	1	
SM45521	HST LN03 D25 W25 L150 Z04-H	✓	25	25	4	150	40	1	
SM52840	HST LN03 D26 W25 L150 Z04-H	✓	26	25	4	150	30	1	
SM52895	HST LN03 D26 C25 L200 Z04	-	26	25	4	200	30	1	
SM52857	HST LN03 D32 W32 L150 Z05-H	✓	32	32	5	150	40	1	
SM52864	HST LN03 D33 W32 L150 Z05-H	✓	33	32	5	150	30	1	
SM52901	HST LN03 D33 C32 L200 Z05	-	33	32	5	200	30	1	
	HST LNMU 06X5..		*D*	*d*	*Z*	*L*	*l*	*a*	
SM45538	HST LN06 D32 W32 L150 Z02-H	✓	32	32	2	150	40	1.5	LNMU 06X5..
SM45545	HST LN06 D35 W32 L150 Z02-H	✓	35	32	2	150	30	1.5	

Size Designation	Master Insert*	Spare Parts		
		Screw	Torx Key	Screw Torque Value N·m
D08 - D16	LNMU 0202..	SSV M1.8x4-9501	STK-T06-9906	0,4
D16 - D18	LNMU 0303..	SSV M2.5x6.5-9534	STK-T08-9908	1,0
D20 - D50				
D32 - D63	LNMU 06X5..	SSV M5x13-9519	STK-T20-9911	5,5

*Suitable Insert brand is TNGLY

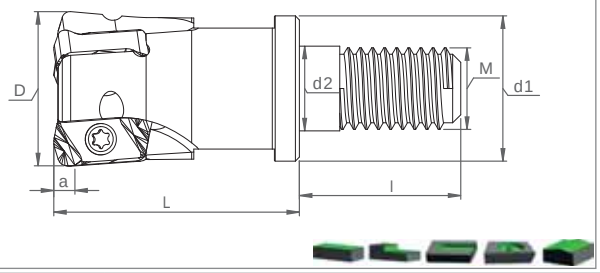

Ordering Code	Item Designation		Dimensions (mm)								Master Insert*
	MHT LNMU 0202.. / 0303..		*D*	*Z*	*d1*	*d2*	*L*	*l*	*M*	*a*	
SM71735	**MHT LN02 D10 M06 L17 Z02-H**	✓	**10**	**2**	**9.2**	**6.5**	**17**	**14.5**	**6**	**0.5**	LNMU 0202..
SM71742	**MHT LN02 D12 M06 L17 Z02-H**	✓	**12**	**2**	**11.2**	**6.5**	**17**	**14.5**	**6**	**0.5**	
SM71759	**MHT LN02 D16 M08 L25 Z03-H**	✓	**16**	**3**	**15**	**8.5**	**25**	**17**	**8**	**0.5**	
SM71766	**MHT LN02 D16 M08 L25 Z04-H**	✓	**16**	**4**	**15**	**8.5**	**25**	**17**	**8**	**0.5**	
SM45552	MHT LN03 D16 M08 L25 Z02-H	✓	16	2	15	8.5	25	17	8	1	LNMU 0303..
SM45569	MHT LN03 D20 M10 L30 Z03-H	✓	20	3	18	10.5	30	19	10	1	
SM45576	MHT LN03 D25 M12 L35 Z04-H	✓	25	4	21	12.5	35	23	12	1	
SM51959	MHT LN03 D32 M16 L43 Z05-H	✓	32	5	29	17	43	23	16	1	
SM60401	MHT LN03 D40 M16 L43 Z05-H	✓	40	5	29	17	43	23	16	1	
SM51966	MHT LN03 D40 M16 L43 Z06-H	✓	40	6	29	17	43	23	16	1	
SM00265	MHT LN03 D42 M16 L43 Z06-H	✓	42	6	29	17	43	23	16	1	

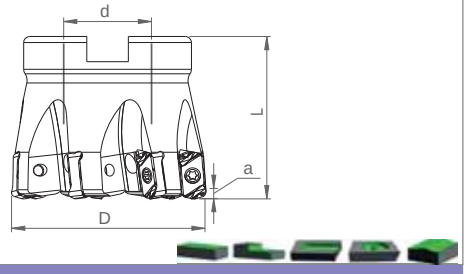

Ordering Code	Item Designation		Dimensions (mm)					Master Insert*
	HTK LNMU 0303.. / 06X5..		*D*	*Z*	*d*	*L*	*a*	
SM45460	HTK LN03 D40 A16 Z05-H	✓	40	5	16	40	1	LNMU 0303..
SM71636	**HTK LN03 D40 A16 Z06-H**	✓	**40**	**6**	**16**	**40**	**1**	
SM71643	**HTK LN03 D40 A16 Z07-H**	✓	**40**	**7**	**16**	**40**	**1**	
SM64850	**HTK LN03 D42 A16 Z05-H**	✓	**42**	**5**	**16**	**40**	**1**	
SM71650	**HTK LN03 D50 A22 Z06-H**	✓	**50**	**6**	**22**	**40**	**1**	
SM45477	HTK LN03 D50 A22 Z07-H	✓	50	7	22	40	1	
SM71667	**HTK LN03 D50 A22 Z08-H**	✓	**50**	**8**	**22**	**40**	**1**	
SM64867	**HTK LN03 D52 A22 Z07-H**	✓	**52**	**7**	**22**	**40**	**1**	
SM79205	**HTK LN03 D63 A22 Z07-H**	✓	**63**	**8**	**22**	**50**	**1**	
SM71674	HTK LN03 D66 A27 Z08-H	✓	66	8	27	50	1	
SM45484	HTK LN06 D50 A22 Z04-H	✓	50	4	22	40	1.5	LNMU 06X5..
SM50280	HTK LN06 D63 A22 Z05-H	✓	63	5	22	40	1.5	
SM68605	**HTK LN06 D66 A27 Z05-H**	✓	**66**	**5**	**27**	**40**	**1.5**	

Size Designation	Master Insert*	Spare Parts		
		Screw	Torx Key	Screw Torque Value
				N·m
D10 - D16	LNMU 0202..	SSV M1.8x4-9501	STK-T06-9906	0,4
D16 - D18	LNMU 0303..	SSV M2.5x6-9505	STK-T08-9908	1,0
D20 - D66		SSV M2.5x7-9506		
D32 - D63	LNMU 06X5..	SSV M5x13-9519	STK-T20-9911	5,5

*Suitable Insert brand is TNGLY

HIGH FEED MILLING TOOLS

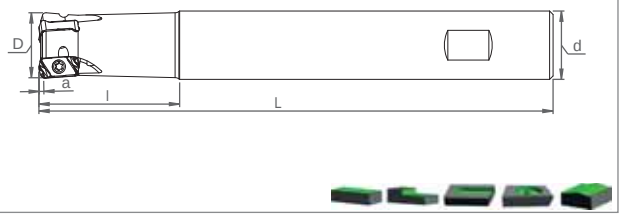

Ordering Code	Item Designation	Dimensions (mm)							Master Insert*
	HST ENMU 1004..		*D*	*d*	*Z*	*L*	*l*	*a*	
SM47273	HST EN10 D16 W16 L150 Z02-H	✓	16	16	2	150	40	1.7	ENMU 1004..
SM47280	HST EN10 D20 W20 L150 Z03-H	✓	20	20	3	150	40	1.7	
SM47297	HST EN10 D25 W25 L150 Z04-H	✓	25	25	4	150	40	1.7	
SM47303	HST EN10 D32 W32 L150 Z05-H	✓	32	32	5	150	40	1.7	

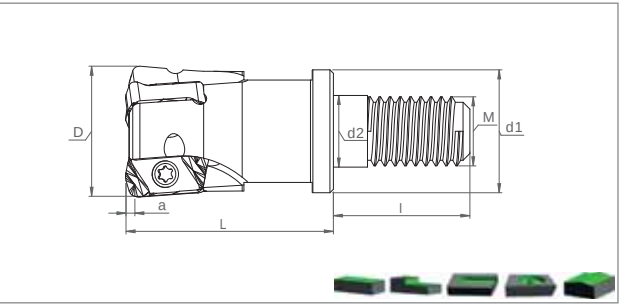

Ordering Code	Item Designation	Dimensions (mm)									Master Insert*
	MHT ENMU 1004..		*D*	*Z*	*d1*	*d2*	*L*	*l*	*M*	*a*	
SM47426	MHT EN10 D16 M08 L25 Z02-H	✓	16	2	15	8.5	25	17	8	1.7	ENMU 1004..
SM47433	MHT EN10 D20 M10 L30 Z03-H	✓	20	3	18	10.5	30	19	10	1.7	
SM47440	MHT EN10 D25 M12 L35 Z04-H	✓	25	4	21	12.5	35	23	12	1.7	

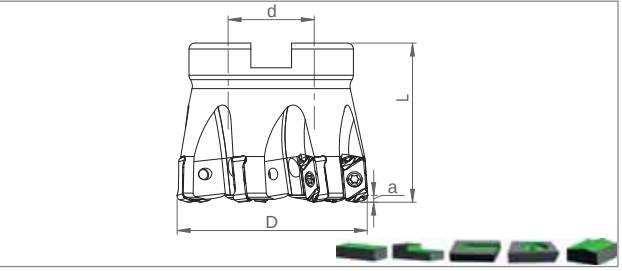

Ordering Code	Item Designation	Dimensions (mm)						Master Insert*
	HTK ENMU 1004..		*D*	*Z*	*d*	*L*	*a*	
SM47242	HTK EN10 D40 A16 Z05-H	✓	40	5	16	40	1.7	ENMU 1004..
SM47259	HTK EN10 D50 A22 Z07-H	✓	50	7	22	40	1.7	
SM47266	HTK EN10 D63 A22 Z09-H	✓	63	9	22	40	1.7	

Size Designation	Master Insert*	Spare Parts		
		Screw	Torx Key	Screw Torque Value
D16 - D20	ENMU 1004..	SSV M2.5x6-9505	STK-T08-9908	1,0
D25 - D63		SSV M2.5x7-9506		

*Suitable Insert brand is DJT

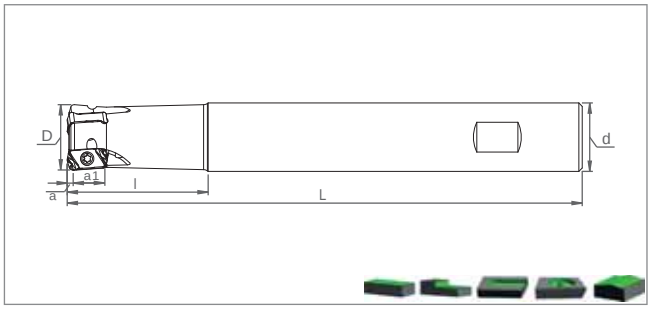

Ordering Code	Item Designation	Dimensions (mm)								Master Insert*
	HST YPHW / ZPMT / EP.. 1003..		*D*	*d*	*Z*	*L*	*l*	*a*	*a1 90°*	
SM47358	HST(90) YP10 D16 W16 L150 Z02-H	✓	16	16	2	150	40	1	9	YPHW / ZPMT / EP.. 1003..
SM47365	HST(90) YP10 D20 W20 L150 Z03-H	✓	20	20	3	150	40	1	9	
SM47372	HST(90) YP10 D25 W25 L150 Z04-H	✓	25	25	4	150	40	1	9	
SM47389	HST(90) YP10 D32 W32 L150 Z05-H	✓	32	32	5	150	40	1	9	

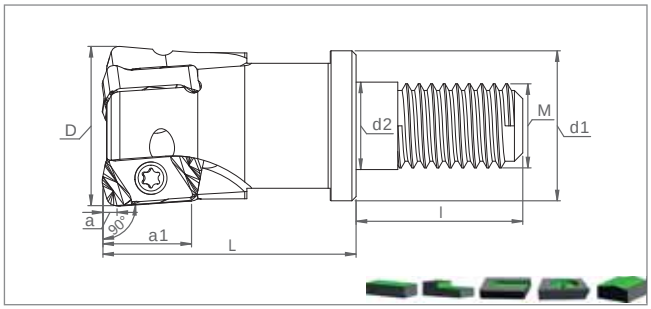

Ordering Code	Item Designation	Dimensions (mm)										Master Insert*
	MHT YPHW / ZPMT / EP.. 1003..		*D*	*Z*	*d1*	*d2*	*L*	*l*	*M*	*a*	*a1 90°*	
SM47457	MHT(90) YP10 D16 M08 L25 Z02-H	✓	16	2	15	8.5	25	17	8	1	9	YPHW / ZPMT / EP.. 1003..
SM47464	MHT(90) YP10 D20 M10 L30 Z03-H	✓	20	3	18	10.5	30	19	10	1	9	
SM47471	MHT(90) YP10 D25 M12 L35 Z04-H	✓	25	4	21	12.5	35	23	12	1	9	
SM63464	MHT(90) YP10 D32 M16 L43 Z05-H	✓	32	6	29	17	43	23	16	1	9	
SM63457	MHT(90) YP10 D42 M16 L43 Z06-H	✓	42	6	29	17	43	23	16	1	9	

Size Designation	Master Insert*	Spare Parts		
		Screw	Torx Key	Screw Torque Value
D16 - D20	YPHW / ZPMT / EP.. 1003..	SSV M2.5x6-9505	STK-T08-9908	1,0
D25 - D42		SSV M2.5x7-9506		

*Suitable Insert brand is DJT

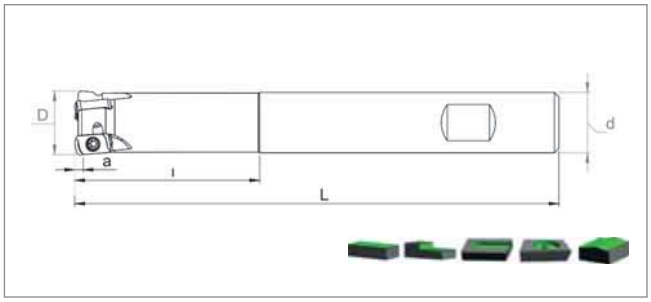

Ordering Code	Item Designation	Dimensions (mm)							Master Insert*
	HST LNMX 0604.. / 1005..		*D*	*d*	*Z*	*L*	*l*	*a*	
SM69527	HST LN06A D16 W16 L150 Z02-H	✓	16	16	2	150	40	1	LNMX 0604..
SM69534	HST LN06A D17 W16 L150 Z02-H	✓	17	16	2	150	30	1	
SM69541	HST LN06A D20 W20 L150 Z03-H	✓	20	20	3	150	40	1	
SM69558	HST LN06A D21 W20 L150 Z03-H	✓	21	20	3	150	30	1	
SM69565	HST LN06A D25 W25 L150 Z04-H	✓	25	25	4	150	40	1	
SM69572	HST LN06A D26 W25 L150 Z04-H	✓	26	25	4	150	30	1	
SM69657	HST LN10A D26 W25 L150 Z03-H	✓	26	25	3	150	30	1.2	LNMX 1005..
SM69664	HST LN10A D33 W32 L150 Z04-H	✓	33	32	4	150	30	1.2	
SM69671	HST LN10A D35 W32 L150 Z04-H	✓	35	32	4	150	30	1.2	

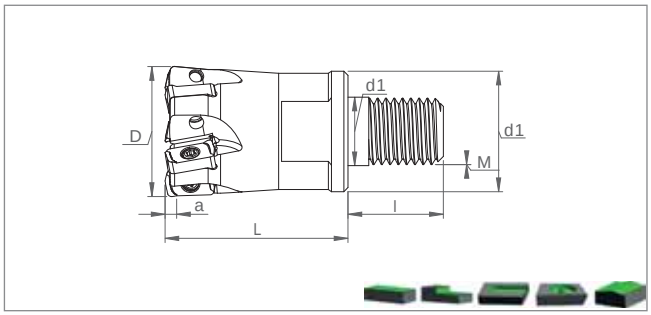

Ordering Code	Item Designation	Dimensions (mm)									Master Insert*
	MHT LNMX 0604.. / 1005..		*D*	*Z*	*d1*	*d2*	*L*	*l*	*M*	*a*	
SM69589	MHT LN06A D20 M10 L30 Z03-H	✓	20	3	18	10.5	30	19	10	1	LNMX 0604..
SM69596	MHT LN06A D25 M12 L35 Z04-H	✓	25	4	21	12.5	35	23	12	1	
SM69602	MHT LN06A D32 M16 L43 Z05-H	✓	32	5	29	17	43	23	16	1	
SM69701	MHT LN10A D25 M12 L35 Z03-H	✓	25	3	21	12.5	35	23	12	1.2	
SM69718	MHT LN10A D32 M16 L43 Z04-H	✓	32	4	29	17	43	23	16	1.2	LNMX 1005..
SM69725	MHT LN10A D33 M16 L43 Z04-H	✓	33	4	29	17	43	23	16	1.2	

Size Designation	Master Insert*	Spare Parts		
		Screw	Torx Key	Screw Torque Value
				N·m
D16 - D32	LNMX 0604..	SSV M2.5x6-9505	STK-T08-9908	1,0
D26 - D35	LNMX 1005..	SSV M3.5x8-SC-9513	STK-T10-9909	2,7

*Suitable Insert brand is ACHTK

SMOXH® CUTTING TOOLS
Kalitenin Yükselen Gücü

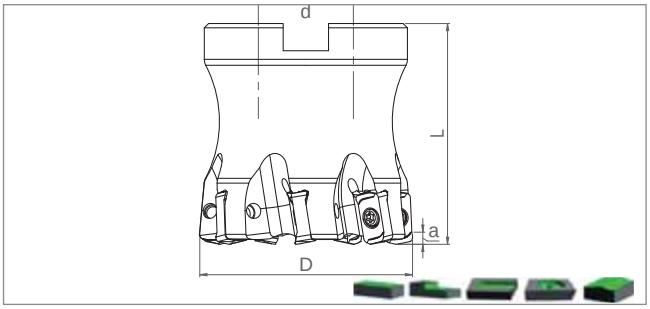

Ordering Code	Item Designation	Dimensions (mm)						Master Insert*
	HTK LNMX 0604.. / 1005..		*D*	*Z*	*d*	*L*	*a*	
SM69619	HTK LN06A D40 A16 Z06-H	✓	40	6	16	40	1	LNMX 0604..
SM62573	HTK LN06A D50 A22 Z06-H	✓	50	6	22	40	1	
SM69626	HTK LN06A D50 A22 Z07-H	✓	50	7	22	40	1.5	
SM69633	HTK LN06A D52 A22 Z07-H	✓	52	7	22	40	1.5	
SM69640	HTK LN06A D63 A22 Z08-H	✓	63	8	22	40	1.5	
SM69688	HTK LN10A D40 A16 Z05-H	✓	40	5	16	50	1.5	
SM62580	HTK LN10A D50 A22 Z05-H	✓	50	5	22	40	2	LNMX 1005..
SM69695	HTK LN10A D52 A22 Z07-H	✓	52	7	22	40	2	
SM62597	HTK LN10A D63 A22 Z06-H	✓	63	6	22	40	2	

Cooling mounting screw is optional / See Page “526” for cooling mounting screws.
İçten su vermeli montaj vidaları opsiyoneldir. / Bkz. Sayfa “526” İçten su vermeli montaj vidaları için.

Size Designation	Master Insert*	Spare Parts		
		Screw	Torx Key	Screw Torque Value
				N·m
D40 - D63	LNMX 0604..	SSV M2.5x6-9505	STK-T08-9908	1,0
D40 - D63	LNMX 1005..	SSV M3.5x8-SC-9513	STK-T10-9909	2,7

*Suitable Insert brand is ACHTK

HIGH FEED MILLING TOOLS

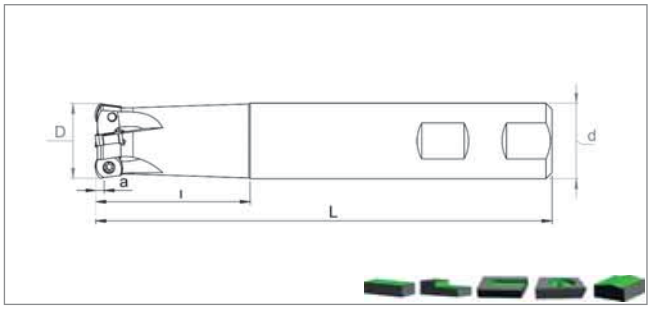

Ordering Code	Item Designation	Dimensions (mm)							Master Insert*
	HST ENMX 0604.. / 0905..		*D*	*d*	*Z*	*L*	*l*	*a*	
SM58170	HST EN06 D16 W16 L150 Z02-H	✓	16	16	2	150	40	0.9	ENMX 0604..
SM58187	HST EN06 D17 W16 L150 Z02-H	✓	17	16	2	150	30	0.9	
SM58194	HST EN06 D20 W20 L150 Z03-H	✓	20	20	3	150	40	1	
SM58200	HST EN06 D20 C20 L200 Z03	-	20	20	3	200	50	1	
SM58217	HST EN06 D21 W20 L150 Z03-H	✓	21	20	3	150	30	1	
SM58224	HST EN06 D21 C20 L200 Z03	-	21	20	3	200	30	1	
SM58231	HST EN06 D25 W25 L150 Z04-H	✓	25	25	4	150	40	1	
SM58248	HST EN06 D25 C25 L200 Z04	-	25	25	4	200	50	1	
SM58255	HST EN06 D26 W25 L150 Z04-H	✓	26	25	4	150	30	1	
SM58262	HST EN06 D26 C25 L200 Z04	-	26	25	4	200	30	1	
SM58279	HST EN06 D32 C32 L200 Z05	-	32	32	5	200	50	1	
SM58286	HST EN06 D33 C32 L200 Z05	-	33	32	5	200	30	1	
SM70028	**HST EN09 D25 W25 L150 Z02-H**	✓	**25**	**25**	**2**	**150**	**40**	**1.5**	ENMX 0905..
SM70035	**HST EN09 D26 W25 L150 Z02-H**	✓	**26**	**25**	**2**	**150**	**30**	**1.5**	
SM70042	**HST EN09 D32 W32 L150 Z03-H**	✓	**32**	**32**	**3**	**150**	**40**	**1.5**	
SM70059	**HST EN09 D33 W32 L150 Z03-H**	✓	**33**	**32**	**3**	**150**	**30**	**1.5**	
SM70066	**HST EN09 D40 W32 L150 Z04-H**	✓	**32**	**32**	**4**	**150**	**30**	**1.5**	

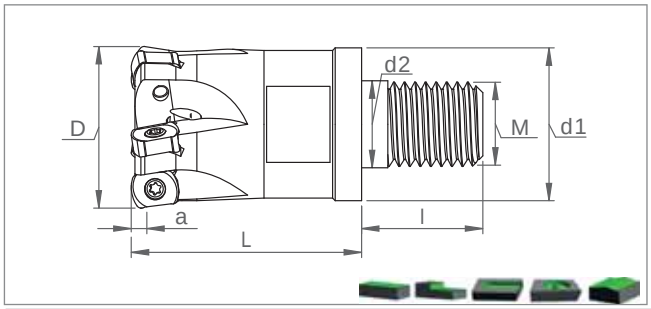

Ordering Code	Item Designation	Dimensions (mm)									Master Insert*
	MHT ENMX 0604.. / 0905..		*D*	*Z*	*d1*	*d2*	*L*	*l*	*M*	*a*	
SM58293	MHT EN06 D16 M08 L25 Z02-H	✓	16	2	15	8.5	25	17	8	0.9	ENMX 0604..
SM58309	MHT EN06 D20 M10 L30 Z03-H	✓	20	3	28	10.5	30	19	10	1	
SM58316	MHT EN06 D25 M12 L35 Z04-H	✓	25	4	21	12.5	35	23	12	1	
SM58323	MHT EN06 D32 M16 L43 Z05-H	✓	32	5	29	17	43	23	16	1	
SM58330	MHT EN06 D35 M16 L43 Z05-H	✓	35	5	29	17	43	23	16	1	
SM58347	MHT EN06 D42 M16 L43 Z05-H	✓	42	5	29	17	43	23	16	1	
SM70073	**MHT EN09 D25 M12 L35 Z02-H**	✓	**25**	**2**	**21**	**12.5**	**35**	**23**	**12**	**1.5**	ENMX 0905..
SM70080	**MHT EN09 D32 M16 L43 Z03-H**	✓	**32**	**3**	**29**	**17**	**43**	**23**	**16**	**1.5**	
SM70097	**MHT EN09 D40 M16 L43 Z04-H**	✓	**40**	**4**	**29**	**17**	**43**	**23**	**16**	**1.5**	

*Suitable Insert brand is YG-1

SMOXH CUTTING TOOLS
Kalitenin Yükselen Gücü

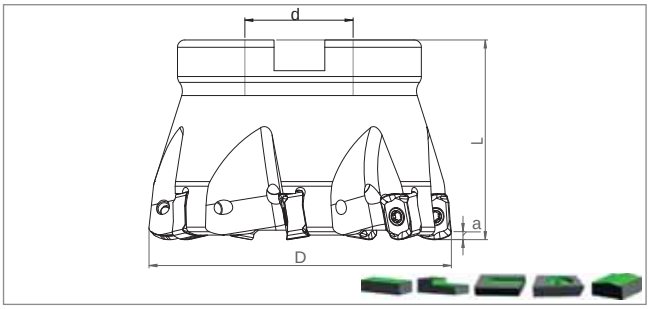

Ordering Code	Item Designation	Dimensions (mm)						Master Insert*
	HTK ENMX 0604..		*D*	*Z*	*d*	*L*	*a*	
SM58354	HTK EN06 D40 A16 Z05-H	✓	40	5	16	40	1	ENMX 0604..
SM58361	HTK EN06 D50 A22 Z06-H	✓	50	6	22	40	1	
SM58378	HTK EN06 D63 A22 Z07-H	✓	63	7	22	40	1	
SM58385	HTK EN06 D80 A27 Z08-H	✓	80	8	27	50	1	
SM70103	**HTK EN09 D40 A16 Z04-H**	✓	**40**	**4**	**16**	**40**	**1.5**	ENMX 0905..
SM70110	**HTK EN09 D50 A22 Z05-H**	✓	**50**	**5**	**22**	**40**	**1.5**	
SM70127	**HTK EN09 D63 A22 Z06-H**	✓	**63**	**6**	**22**	**40**	**1.5**	
SM70134	**HTK EN09 D66 A27 Z06-H**	✓	**66**	**6**	**27**	**50**	**1.5**	

Cooling mounting screw is optional / See Page "526" for cooling mounting screws.
İçten su vermeli montaj vidaları opsiyoneldir. / Bkz. Sayfa "526" İçten su vermeli montaj vidaları için.

Size Designation	Master Insert*	Spare Parts		
		Screw	Torx Key	Screw Torque Value
				N·m
D16 - D21	ENMX 0604..	SSV M2.5x6-9505	STK-T08-9908	1,0
D25 - D80		SSV M2.5x7-9506		
D25 - D32	ENMX 0905..	SSV M3.5x8-SC-9513	STK-T10-9909	2,7
D40 - D66		SSV M3.5x8-SC-9513		

*Suitable Insert brand is YG-1

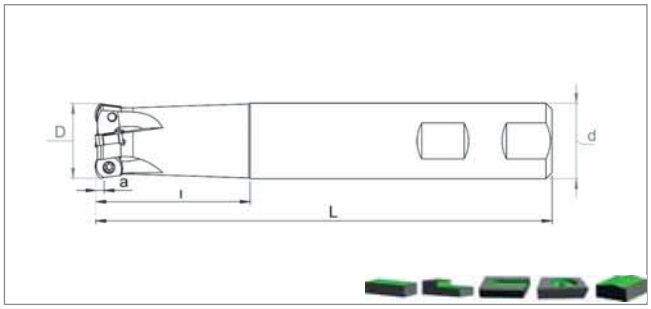

Ordering Code	Item Designation	Dimensions (mm)							Master Insert*
	HST BNGX 10T3..		*D*	*d*	*Z*	*L*	*l*	*a*	
SM46375	HST BN10 D16 W16 L150 Z02-H	✓	16	16	2	150	40	1	BNGX 10T3..
SM46382	HST BN10 D20 W20 L150 Z03-H	✓	20	20	3	150	40	1	
SM46399	HST BN10 D25 W25 L150 Z04-H	✓	25	25	4	150	40	1	
SM46405	HST BN10 D32 W32 L150 Z05-H	✓	32	32	5	150	40	1	

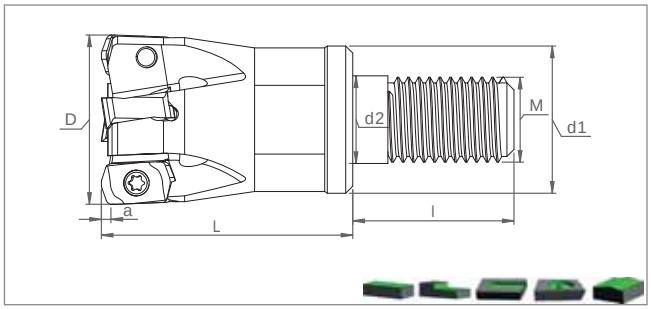

Ordering Code	Item Designation	Dimensions (mm)									Master Insert*
	MHT BNGX 10T3..		*D*	*Z*	*d1*	*d2*	*L*	*l*	*M*	*a*	
SM46450	MHT BN10 D16 M08 L25 Z02-H	✓	16	2	15	8.5	25	17	8	1	BNGX 10T3..
SM46467	MHT BN10 D20 M10 L30 Z03-H	✓	20	3	18	10.5	30	19	10	1	
SM46474	MHT BN10 D25 M12 L35 Z04-H	✓	25	4	21	12.5	35	23	12	1	
SM46481	MHT BN10 D32 M16 L43 Z05-H	✓	32	5	29	17	43	23	16	1	

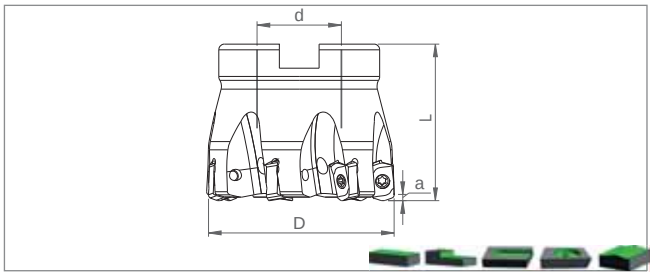

Ordering Code	Item Designation	Dimensions (mm)						Master Insert*
	HTK BNGX 10T3..		*D*	*Z*	*d*	*L*	*a*	
SM43558	HTK BN10 D40 A16 Z06-H	✓	40	6	16	40	1	BNGX 10T3..
SM43565	HTK BN10 D50 A22 Z07-H	✓	50	7	22	40	1	

Size Designation	Master Insert*	Spare Parts		
		Screw	Torx Key	Screw Torque Value
				N·m
D16 - D20	BNGX 10T3..	SSV M2.5x6-9505	STK-T08-9908	1,0
D25 - D50		SSV M2.5x7-9506		

*Suitable Insert brand is PRMT

SMOXH® CUTTING TOOLS
Kalitenin Yükselen Gücü

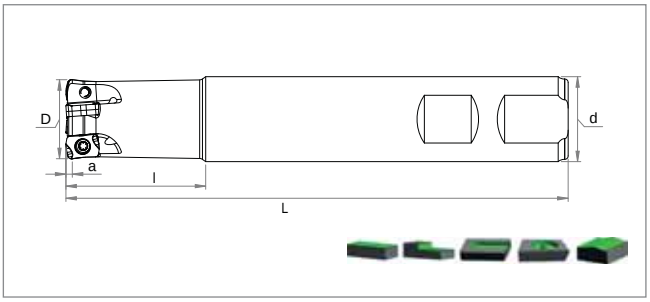

Ordering Code	Item Designation	Dimensions (mm)							Master Insert*
	HST LNMX *0402.. / 0603.. / 1004..*		*D*	*d*	*Z*	*L*	*l*	*a*	
SM70615	HST LNMX04 D10 C10 L100 Z02-H	✓	10	10	2	100	20	0.5	LNMX 0402..
SM70622	HST LNMX04 D12 C12 L100 Z03-H	✓	12	12	3	100	20	0.5	
SM70639	HST LNMX04 D14 C12 L100 Z03-H	✓	14	12	3	100	20	0.5	
SM70646	HST LNMX04 D16 C16 L100 Z04-H	✓	16	16	4	100	20	0.5	
SM70653	HST LNMX06 D16 W16 L150 Z02-H	✓	16	16	2	150	40	0.7	LNMX 0603..
SM70660	HST LNMX06 D17 W16 L150 Z02-H	✓	17	16	2	150	30	1	
SM70677	HST LNMX06 D20 W20 L150 Z03-H	✓	20	20	3	150	40	1	
SM70684	HST LNMX06 D21 W20 L150 Z03-H	✓	21	20	3	150	30	1	
SM70691	HST LNMX06 D25 W25 L150 Z04-H	✓	25	25	4	150	40	1	
SM70707	HST LNMX06 D26 W25 L150 Z04-H	✓	26	25	4	150	30	1	

Size Designation	Master Insert*	Spare Parts		
		Screw	Torx Key	Screw Torque Value
				N·m
D10 - D16	LNMX 0402..	SSV M1.8x4-9501	STK-T06-9906	0,4
D16 - D26	LNMX 0603..	SSV M3x6-9507	STK-T08-9908	1,9

*Suitable Insert brand is KRLY

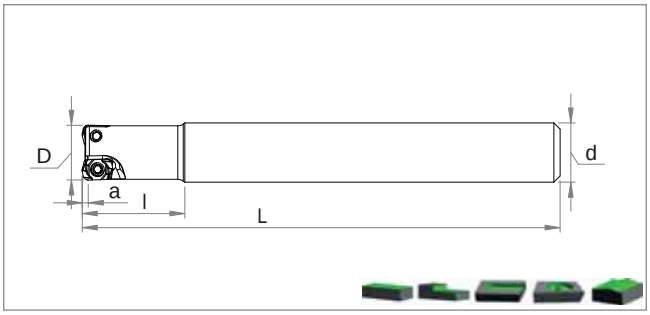

Ordering Code	Item Designation	Dimensions (mm)							Master Insert*
	HST LSMT 0202..		*D*	*d*	*Z*	*L*	*l*	*a*	
SM71834	HST LS02 D10 C10 L100 Z02-H	✓	10	10	2	100	20	0.5	LSMT 0202..
SM71841	HST LS02 D12 C12 L100 Z02-H	✓	12	12	2	100	20	0.5	
SM71858	HST LS02 D16 C16 L120 Z03-H	✓	16	16	3	120	30	0.5	

Size Designation	Master Insert*	Spare Parts		
		Screw	Torx Key	Screw Torque Value
D10 - D14	LSMT 0202..	SSV M2x4-9521	STK-T06-9906	0,4 N·m

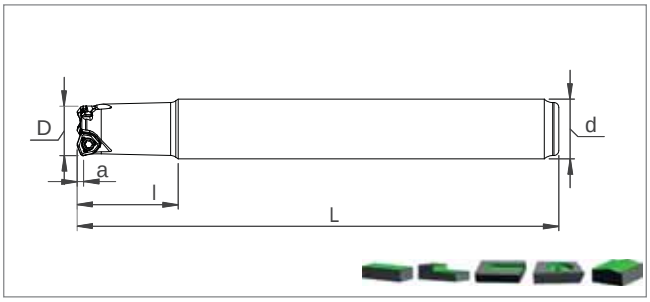

Ordering Code	Item Designation	Dimensions (mm)							Master Insert**
	HST WXMT 0302..		*D*	*d*	*Z*	*L*	*l*	*a*	
SM72015	HST WX03 D10 C10 L100 Z02-H	✓	10	10	2	100	20	0.6	WXMT 0302..
SM72022	HST WX03 D12 C12 L100 Z03-H	✓	12	12	3	100	20	0.6	
SM72039	HST WX03 D16 C16 L120 Z03-H	✓	16	16	3	120	30	0.6	

Size Designation	Master Insert**	Spare Parts		
		Screw	Torx Key	Screw Torque Value
D10 - D16	WXMT 0302..	SSV M1.8x4-9501	STK-T06-9906	0,4 N·m

*Suitable Insert brand is TNGLY
**Suitable Insert brand is ISC

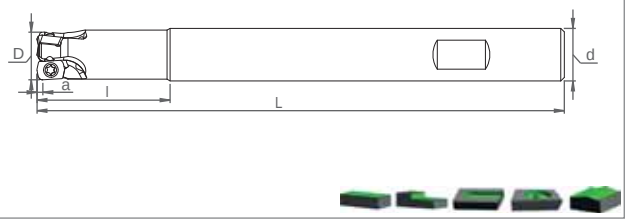

Ordering Code	Item Designation		Dimensions (mm)						Master Insert*
HST LPMT / LPMW / LPEW 0402..			*D*	*d*	*Z*	*L*	*l*	*a*	
SM47396	HST LP04 D10 C10 L120 Z02-H	✓	10	10	2	120	30	0.4	LP.. 0402.. KRLY
SM47402	HST LP04 D12 C12 L120 Z02-H	✓	12	12	2	120	30	0.4	
SM47419	HST LP04 D14 C12 L120 Z03-H	✓	14	12	3	120	20	0.4	

Size Designation	Master Insert*	Spare Parts		
		Screw	Torx Key	Screw Torque Value
				N·m
D10 - D14	LP.. 0402..	SSV M1.8x4-9501	STK-T06-9906	0,4

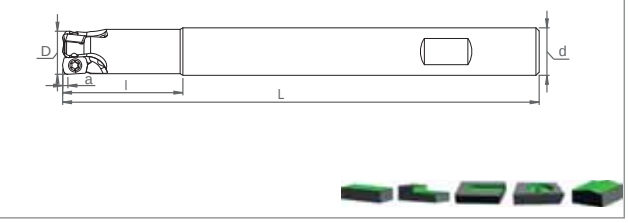

Ordering Code	Item Designation		Dimensions (mm)						Master Insert**
HST EOMT / ZOMT 0602..			*D*	*d*	*Z*	*L*	*l*	*a*	
SM43473	HST EO06 D10 W10 L120 Z02-H	✓	10	10	2	120	25	0.3	EOMT / ZOMT 0602
SM43480	HST EO06 D12 W12 L120 Z02-H	✓	12	12	2	120	25	0.3	

Size Designation	Master Insert**	Spare Parts		
		Screw	Torx Key	Screw Torque Value
				N·m
D10 - D12	EOMT / ZOMT 0602..	SSV M1.8x4-9501	STK-T06-9906	0,4

*Suitable Insert brand is KRLY
**Suitable Insert brand is DJT

HIGH FEED MILLING TOOLS

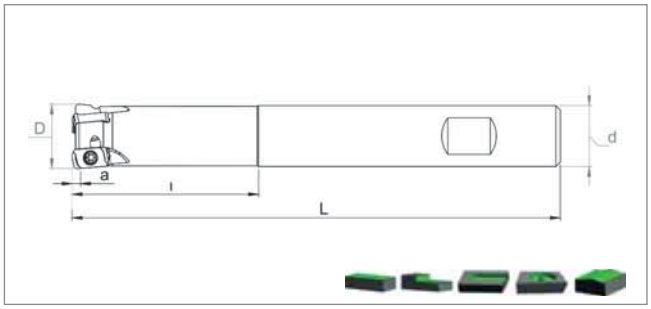

Ordering Code	Item Designation	Dimensions (mm)							Master Insert*
	HST LOGU 0303..		*D*	*d*	*Z*	*L*	*l*	*a*	
SM52574	HST LG03 D16 W16 L100 Z02-H	✓	16	16	2	100	30	1	LOGU 0303..
SM27442	HST LG03 D16 W16 L150 Z02-H	✓	16	16	2	150	40	1	
SM52581	HST LG03 D17 W16 L150 Z02-H	✓	17	16	2	150	30	1	
SM52598	HST LG03 D20 W20 L100 Z03-H	✓	20	20	3	100	30	1	
SM27480	HST LG03 D20 W20 L150 Z03-H	✓	20	20	3	150	40	1	
SM01972	HST LG03 D20 W20 L150 Z04-H	✓	20	20	4	150	40	1	
SM37991	HST LG03 D21 W20 L150 Z03-H	✓	21	20	3	150	30	1	
SM52611	HST LG03 D21 C20 L200 Z03	-	21	20	3	200	30	1	
SM27503	HST LG03 D22 W20 L150 Z03-H	✓	22	20	3	150	30	1	
SM52628	HST LG03 D25 W25 L100 Z04-H	✓	25	25	4	100	30	1	
SM27527	HST LG03 D25 W25 L150 Z04-H	✓	25	25	4	150	40	1	
SM01989	HST LG03 D25 W25 L150 Z05-H	✓	25	25	5	150	40	1	
SM52642	HST LG03 D25 C25 L200 Z04	-	25	25	4	200	50	1	
SM52659	HST LG03 D26 W25 L150 Z04-H	✓	26	25	4	150	30	1	
SM52666	HST LG03 D32 C32 L200 Z05	-	32	32	5	200	50	1	
SM27541	HST LG03 D32 W32 L150 Z05-H	✓	32	32	5	150	40	1	
SM52673	HST LG03 D33 W32 L150 Z05-H	✓	33	32	5	150	30	1	

Size Designation	Master Insert*	Spare Parts		
		Screw	Torx Key	Screw Torque Value
				N·m
D16 - D33	LOGU 0303..	SSV M3x6.5 LG-9509	STK-T08-9908	1,9

*Suitable Insert brand is KYCR

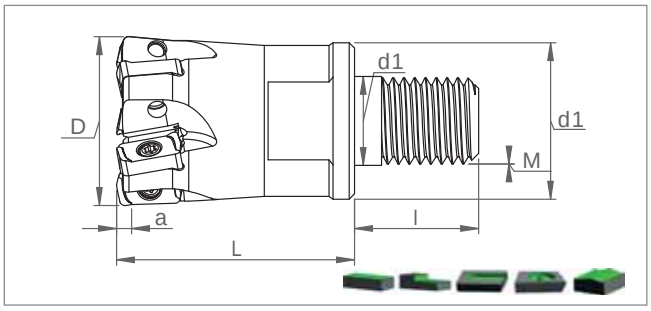

Ordering Code	Item Designation	Dimensions (mm)									Master Insert*
	MHT LOGU 0303..		*D*	*Z*	*d1*	*d2*	*L*	*l*	*M*	*a*	
SM37144	MHT LG03 D16 M08 L25 Z02-H	✓	16	2	15	8.5	25	17	8	1	LOGU 0303..
SM29996	MHT LG03 D20 M10 L30 Z03-H	✓	20	3	18	10.5	30	19	10	1	
SM00760	MHT LG03 D20 M10 L30 Z04-H	✓	20	4	18	10.5	30	19	10	1	
SM62061	MHT LG03 D25 M12 L35 Z03-H	✓	25	3	21	12.5	35	23	12	1	
SM29989	MHT LG03 D25 M12 L35 Z04-H	✓	25	4	21	12.5	35	23	12	1	
SM00715	MHT LG03 D25 M12 L35 Z05-H	✓	25	5	21	12.5	35	23	12	1	
SM27565	MHT LG03 D32 M16 L43 Z05-H	✓	32	5	29	17	43	23	16	1	
SM00722	MHT LG03 D32 M16 L43 Z06-H	✓	32	6	29	17	43	23	16	1	
SM37151	MHT LG03 D35 M16 L43 Z05-H	✓	35	5	29	17	43	23	16	1	
SM01132	MHT LG03 D42 M16 L43 Z05-H	✓	42	5	29	17	43	23	16	1	
SM52697	MHT LG03 D42 M16 L43 Z06-H	✓	42	6	29	17	43	23	16	1	

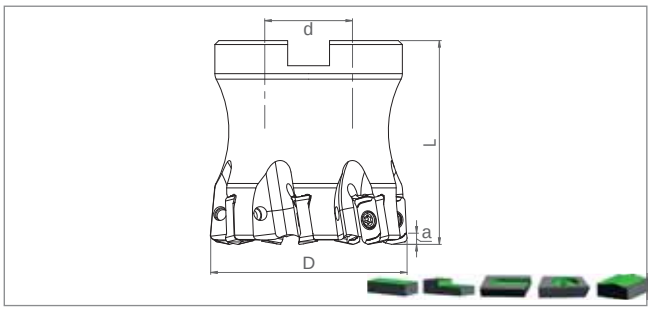

Ordering Code	Item Designation	Dimensions (mm)						Master Insert*
	HTK LOGU 0303..		*D*	*Z*	*d*	*L*	*a*	
SM33146	HTK LG03 D40 A16 Z05-H	✓	40	5	16	40	1	LOGU 0303..
SM52550	HTK LG03 D40 A16 Z06-H	✓	40	6	16	40	1	
SM60661	HTK LG03 D40 A16 Z07-H	✓	40	7	16	40	1	
SM52567	HTK LG03 D50 A22 Z06-H	✓	50	6	22	40	1	
SM29330	HTK LG03 D50 A22 Z07-H	✓	50	7	22	40	1	
SM60678	HTK LG03 D50 A22 Z08-H	✓	50	8	22	40	1	
SM33153	HTK LG03 D63 A22 Z09-H	✓	63	9	22	40	1	

Cooling mounting screw is optional / See Page “526” for cooling mounting screws.
İçten su vermeli montaj vidaları opsiyoneldir. / Bkz. Sayfa “526” İçten su vermeli montaj vidaları için.

Size Designation	Master Insert*	Spare Parts		
		Screw	Torx Key	Screw Torque Value
				N·m
D16 - D63	LOGU 0303..	SSV M3x6.5 LG-9509	STK-T08-9908	1,9

*Suitable Insert brand is KYCR

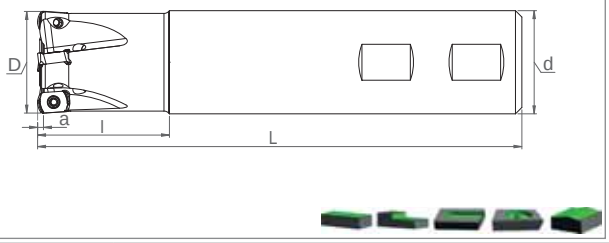

Ordering Code	Item Designation	Dimensions (mm)							Master Insert*
	HST LOHT 0603..		*D*	*d*	*Z*	*L*	*l*	*a*	
SM58774	HST LO06 D20 W20 L150 Z02-H	✓	20	20	2	150	40	0.9	LOHT 0603..
SM58781	HST LO06 D21 W20 L150 Z02-H	✓	21	20	2	150	30	0.9	
SM58798	HST LO06 D25 W25 L150 Z03-H	✓	25	25	3	150	40	0.9	
SM58804	HST LO06 D26 W25 L150 Z03-H	✓	26	25	3	150	30	0.9	
SM58811	HST LO06 D32 W32 L150 Z04-H	✓	32	32	4	150	40	0.9	

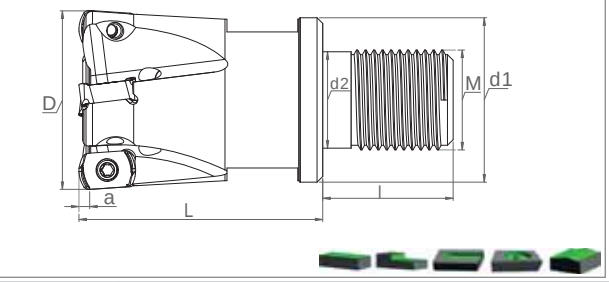

Ordering Code	Item Designation	Dimensions (mm)									Master Insert*
	MHT LOHT 0603..		*D*	*Z*	*d1*	*d2*	*L*	*l*	*M*	*a*	
SM58828	MHT LO06 D20 M10 L30 Z02-H	✓	20	2	18	10.5	30	19	10	0.9	LOHT 0603..
SM58835	MHT LO06 D25 M12 L35 Z03-H	✓	25	3	21	12.5	35	23	12	0.9	
SM58842	MHT LO06 D32 M16 L43 Z04-H	✓	32	4	29	17	43	23	16	0.9	

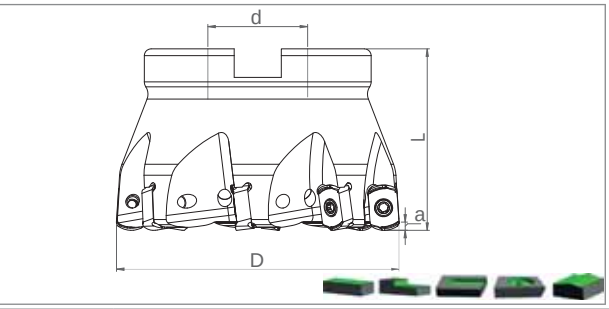

Ordering Code	Item Designation	Dimensions (mm)					Master Insert*
	HTK LOHT 0603..		*D*	*Z*	*d*	*L*	*a*	
SM56565	HTK LO06 D40 A16 Z06-H	✓	40	6	16	40	0.9	LOHT 0603..
SM56572	HTK LO06 D50 A22 Z07-H	✓	50	7	22	40	0.9	
SM56589	HTK LO06 D52 A22 Z07-H	✓	52	7	22	40	0.9	
SM56596	HTK LO06 D63 A22 Z08-H	✓	63	8	22	40	0.9	

Size Designation	Master Insert*	Spare Parts		
		Screw	Torx Key	Screw Torque Value
D20 - D63	LOHT 0603..	SSV M2.5x7-9506	STK-T08-9908	1,0 N·m

*Suitable Insert brand is SCO

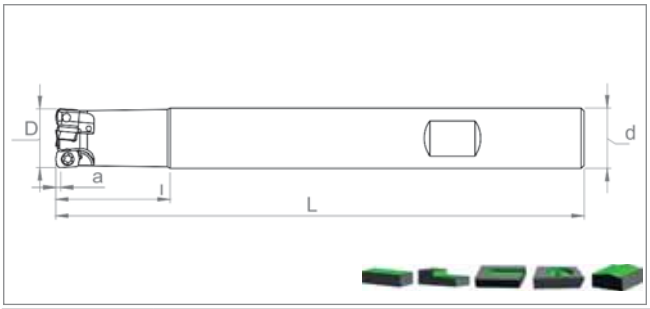

Ordering Code	Item Designation		Dimensions (mm)						Master Insert*
	HST LPGT 0102..		*D*	*d*	*Z*	*L*	*l*	*a*	
SM37489	HST LP01 D10 C10 L100 Z02-H	✓	10	10	2	100	20	0.5	LPGT 0102..
SM77294	**HST LP01 D11 C10 L100 Z02-H**	✓	**11**	**10**	**2**	**100**	**20**	**0.5**	
SM79458	**HST LP01 D12 C12 L100 Z02-H**	✓	**12**	**12**	**2**	**100**	**20**	**0.5**	
SM37496	HST LP01 D12 C12 L100 Z03-H	✓	12	12	3	100	20	0.5	
SM77300	**HST LP01 D13 C12 L100 Z03-H**	✓	**13**	**12**	**3**	**100**	**20**	**0.5**	
SM51669	HST LP01 D14 C12 L100 Z03-H	✓	14	12	3	100	20	0.5	
SM37502	HST LP01 D16 C16 L120 Z04-H	✓	16	16	4	120	30	0.5	
SM69787	**HST LP01 D20 C20 L120 Z05-H**	✓	**20**	**20**	**5**	**120**	**30**	**0.5**	
SM77317	**HST LP01 D21 C20 L120 Z05-H**	✓	**21**	**20**	**5**	**120**	**30**	**0.5**	

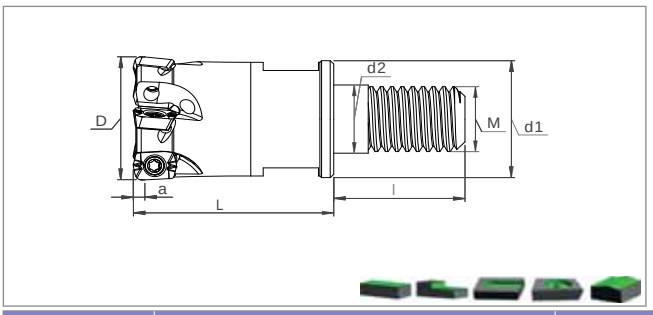

Ordering Code	Item Designation		Dimensions (mm)								Master Insert*
	MHT LPGT 0102..		*D*	*Z*	*d1*	*d2*	*L*	*l*	*M*	*a*	
SM69794	MHT LP01 D10 M06 L17 Z02-H	✓	10	2	9.2	6.5	17	14.7	6	0.5	LPGT 0102..
SM69800	MHT LP01 D12 M06 L17 Z03-H	✓	12	3	11.2	6.5	17	14.7	6	0.5	
SM69817	MHT LP01 D14 M06 L17 Z03-H	✓	14	3	11.2	6.5	17	14.7	6	0.5	
SM69824	MHT LP01 D16 M08 L25 Z04-H	✓	16	4	15	8.5	25	17	8	0.5	
SM62245	MHT LP01 D20 M10 L30 Z05-H	✓	20	5	18	10.5	30	19	10	0.5	

Size Designation	Master Insert*	Spare Parts		
		Screw	Torx Key	Screw Torque Value
				N·m
D10 - D20	LPGT 0102..	SSV M2x4-9521	STK-T06-9906	0,4

*Suitable Insert brand is KYCR

HIGH FEED MILLING TOOLS

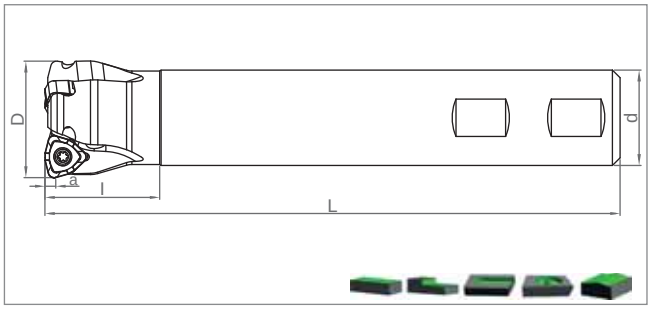

Ordering Code	Item Designation	Dimensions (mm)							Master Insert*
	HST WNMX 0603.. / 09T3..		*D*	*d*	*Z*	*L*	*l*	*a*	
SM44333	HST WN0603 D17 W16 L150 Z02-H	✓	17	16	2	150	30	1	WNMX 0603..
SM44340	HST WN0603 D20 W20 L150 Z02-H	✓	20	20	2	150	40	1	
SM44357	HST WN0603 D21 W20 L150 Z02-H	✓	21	20	2	150	30	1	
SM44364	HST WN0603 D25 W25 L150 Z03-H	✓	25	25	3	150	40	1	
SM44371	HST WN0603 D26 W25 L150 Z03-H	✓	26	25	3	150	30	1	
SM44388	HST WN0603 D32 W32 L150 Z04-H	✓	32	32	4	150	40	1	
SM44395	HST WN0603 D33 W32 L150 Z04-H	✓	33	32	4	150	30	1	
SM26261	HST WN09T3 D25 W25 L150 Z02-H	✓	25	25	2	150	40	1.5	WNMX 09T3..
SM26278	HST WN09T3 D25 C25 L200 Z02	-	25	25	2	200	50	1.5	
SM26285	HST WN09T3 D25 C25 L300 Z02	-	25	25	2	300	30	1.5	
SM26292	HST WN09T3 D26 W25 L150 Z02-H	✓	26	25	2	150	30	1.5	
SM26308	HST WN09T3 D26 C25 L200 Z02	-	26	25	2	200	30	1.5	
SM26315	HST WN09T3 D26 C25 L300 Z02	-	26	25	2	300	50	1.5	
SM26322	HST WN09T3 D32 W25 L150 Z03-H	✓	32	25	3	150	30	1.5	
SM56480	HST WN09T3 D32 W32 L150 Z03-H	✓	32	32	3	150	40	1.5	
SM26339	HST WN09T3 D32 C25 L200 Z03	-	32	25	3	200	30	1.5	
SM56497	HST WN09T3 D32 C32 L200 Z03	-	32	32	3	200	50	1.5	
SM26346	HST WN09T3 D32 C32 L300 Z03	-	32	32	3	300	230	1.5	
SM26353	HST WN09T3 D33 W32 L150 Z03-H	✓	33	32	3	150	30	1.5	
SM26360	HST WN09T3 D33 C32 L200 Z03	-	33	32	3	200	30	1.5	
SM26377	HST WN09T3 D33 C32 L300 Z03	-	33	32	3	300	50	1.5	
SM26384	HST WN09T3 D35 W32 L150 Z04-H	✓	35	32	4	150	30	1.5	
SM26391	HST WN09T3 D35 C32 L200 Z04	-	35	32	4	200	30	1.5	
SM26407	HST WN09T3 D35 C32 L300 Z04	-	35	32	4	300	50	1.5	
SM26414	HST WN09T3 D40 W32 L150 Z04-H	✓	40	32	4	150	30	1.5	
SM26421	HST WN09T3 D40 W32 L200 Z04-H	✓	40	32	4	200	30	1.5	
SM26438	HST WN09T3 D40 C32 L300 Z04	-	40	32	4	300	50	1.5	

Size Designation	Master Insert*	Spare Parts		
		Screw	Torx Key	Screw Torque Value N·m
D17 - D21	WNMX 0603..	SSV M2.5x6-9505	STK-T08-9908	1,0
D25 - D33		SSV M2.5x7-9506		
D25 - D66	WNMX 09T3..	SSV M3x8-9508		1,9

*Suitable Insert brand is KRLY

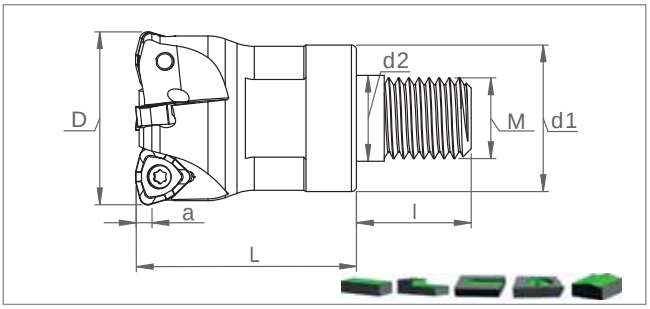

Ordering Code	Item Designation	Dimensions (mm)									Master Insert*
	MHT WNMX 0603.. / 09T3..		*D*	*Z*	*d1*	*d2*	*L*	*l*	*M*	*a*	
SM45620	MHT WN0603 D20 M10 L30 Z02-H	✓	20	2	18	10.5	30	19	10	1	WNMX 0603..
SM45637	MHT WN0603 D25 M12 L35 Z03-H	✓	25	3	21	12.5	35	23	12	1	
SM45644	MHT WN0603 D32 M16 L43 Z04-H	✓	32	4	29	17	43	23	16	1	
SM36635	MHT WN09T3 D25 M12 L35 Z02-H	✓	25	2	21	12.5	35	23	12	1.5	WNMX 09T3..
SM25790	MHT WN09T3 D32 M16 L43 Z03-H	✓	32	3	29	17	43	23	16	1.5	
SM27312	MHT WN09T3 D35 M16 L43 Z04-H	✓	35	4	29	17	43	23	16	1.5	
SM25806	MHT WN09T3 D40 M16 L43 Z04-H	✓	40	4	29	17	43	23	16	1.5	
SM39094	MHT WN09T3 D42 M16 L43 Z04-H	✓	42	4	29	17	43	23	16	1.5	

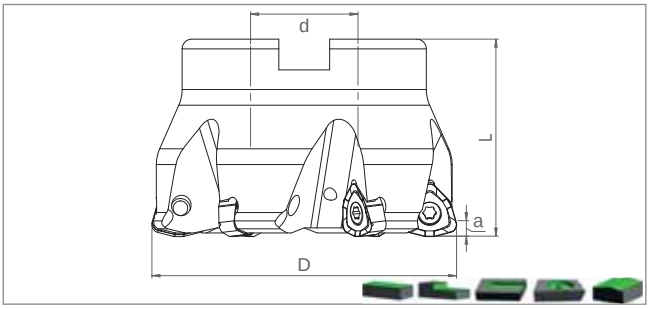

Ordering Code	Item Designation	Dimensions (mm)						Master Insert*
	HTK WNMX 09T3..		*D*	*Z*	*d*	*L*	*a*	
SM28081	HTK WN09T3 D40 A16 Z04-H	✓	40	4	16	40	1.5	WNMX 09T3..
SM01811	**HTK WN09T3 D40 A16 Z05-H** NEW	✓	**40**	**5**	**16**	**40**	**1.5**	
SM28074	HTK WN09T3 D50 A22 Z05-H	✓	50	5	22	40	1.5	
SM56008	HTKL WN09T3 D50 A22 Z05-H**	✓	50	5	22	40	1.5	
SM51973	HTK WN09T3 D52 A22 Z05-H	✓	52	5	22	40	1.5	
SM22560	HTK WN09T3 D63 A22 Z06-H	✓	63	6	22	40	1.5	
SM56015	HTKL WN09T3 D63 A22 Z06-H**	✓	63	6	22	40	1.5	
SM51980	HTK WN09T3 D66 A27 Z06-H	✓	66	6	27	50	1.5	

Cooling mounting screw is optional / See Page "526" for cooling mounting screws.
İçten su vermeli montaj vidaları opsiyoneldir. / Bkz. Sayfa "526" İçten su vermeli montaj vidaları için.

Size Designation	Master Insert*	Spare Parts		
		Screw	Torx Key	Screw Torque Value N·m
D17 - D21	WNMX 0603..	SSV M2.5x6-9505	STK-T08-9908	1,0
D25 - D33		SSV M2.5x7-9506		
D25 - D66	WNMX 09T3..	SSV M3x8-9508		1,9

*Suitable Insert brand is KRLY
**Left Side / Sol Yön

HIGH FEED MILLING TOOLS

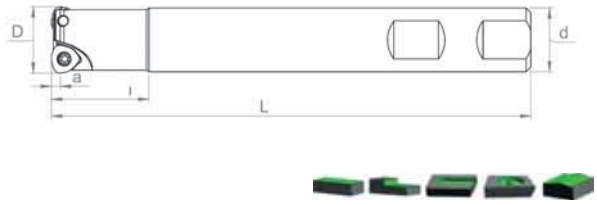

Ordering Code	Item Designation	Dimensions (mm)							Master Insert*
	HST JOMT 06T2.. / 0803.. JDM.-09T3..		*D*	*d*	*Z*	*L*	*l*	*a***	
SM35041	HST JO06 D16 W16 L120 Z02-H	✓	16	16	2	120	30	1	JOMT 06T2..
SM35058	HST JO06 D17 W16 L120 Z02-H	✓	17	16	2	120	30	1	
SM35065	HST JO06 D20 W20 L120 Z03-H	✓	20	20	3	120	30	1	
SM35072	HST JO06 D22 W20 L120 Z03-H	✓	22	20	3	120	30	1	
SM35089	HST JO08 D17 W16 L150 Z01-H	✓	17	16	1	150	30	1.5	JOMT 0803..
SM35096	HST JO08 D21 W20 L150 Z02-H	✓	21	20	2	150	30	1.5	
SM35102	HST JO08 D26 W25 L150 Z03-H	✓	26	25	3	150	30	1.5	
SM35003	HST JD09 D25 W25 L150 Z02-H	✓	25	25	2	150	40	2	JDM. 09T3..
SM35010	HST JD09 D26 W25 L150 Z02-H	✓	26	25	2	150	30	2	
SM35027	HST JD09 D32 W32 L150 Z03-H	✓	32	32	3	150	40	2	
SM35034	HST JD09 D33 W32 L150 Z03-H	✓	33	32	3	150	30	2	

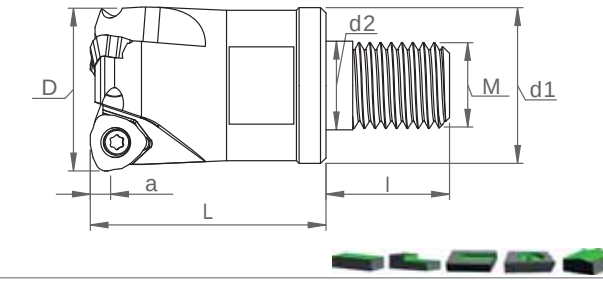

Ordering Code	Item Designation	Dimensions (mm)									Master Insert*
	MHT JOMT 0803.. JDM.-09T3..		*D*	*Z*	*d1*	*d2*	*L*	*l*	*M*	*a***	
SM37175	MHT JO08 D25 M12 L35 Z03-H	✓	25	3	21	12.5	35	23	12	1.5	JOMT 0803..
SM26636	MHT JO08 D32 M16 L43 Z04-H	✓	32	4	29	17	43	23	16	1.5	
SM37199	MHT JO08 D35 M16 L43 Z04-H	✓	35	4	29	17	43	23	16	1.5	
SM37083	MHT JD09 D25 M12 L35 Z02-H	✓	25	2	21	12.5	35	23	12	2	JDM. 09T3..
SM37090	MHT JD09 D32 M16 L43 Z03-H	✓	32	3	29	17	43	23	16	2	
SM37106	MHT JD09 D35 M16 L43 Z03-H	✓	35	3	29	17	43	23	16	2	

*Suitable Insert brand is MTSBH
** "a" may vary with insert type / "a" kesici uc tipine göre değişkenlik gösterebilir

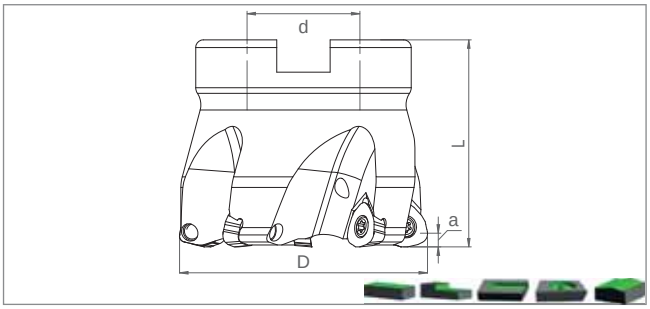

Ordering Code	Item Designation	Dimensions (mm)						Master Insert*
	HTK JOMT 0803.. JDM.-09T3.. / 1204..		*D*	*Z*	*d*	*L*	*a***	
SM33184	HTK JO08 D40 A16 Z04-H	✓	40	4	16	40	1.5	JOMT 0803..
SM00906	HTK JO08 D40 A16 Z05-H	✓	40	5	16	40	1.5	
SM33191	HTK JO08 D50 A22 Z05-H	✓	50	5	22	40	1.5	
SM34761	HTK JD09 D40 A16 Z04-H	✓	40	4	16	40	2	JDM. 09T3..
SM34778	HTK JD09 D50 A22 Z05-H	✓	50	5	22	40	2	
SM34785	HTK JD12 D50 A22 Z04-H	✓	50	4	22	40	2	JDM. 1204..
SM34792	HTK JD12 D63 A22 Z05-H	✓	63	5	22	40	2	

Cooling mounting screw is optional / See Page "526" for cooling mounting screws.
İçten su vermeli montaj vidaları opsiyoneldir. / Bkz. Sayfa "526" İçten su vermeli montaj vidaları için.

Size Designation	Master Insert*	Spare Parts		
		Screw	Torx Key	Screw Torque Value N·m
D16 - D17	JOMT 06T2..	SSV M2.5x6-9505	STK-T08-9908	1,0
D20 - D22		SSV M2.5x7-9506		
D17 - D21	JOMT 0803..	SSV M3x6-9507		1,9
D25 - D50		SSV M3x8-9508		
D25 - D35	JDM. 09T3..	SSV M3.5x8-9510	STK-T15-9910	2,7
D40 - D50		SSV M3.5x10-9511		
D50 - D63	JDM. 1204..	SSV M4x10 9514		3,9

*Suitable Insert brand is MTSBH
** "a" may vary with insert type / "a" kesici uc tipine göre değişkenlik gösterebilir

HIGH FEED MILLING TOOLS

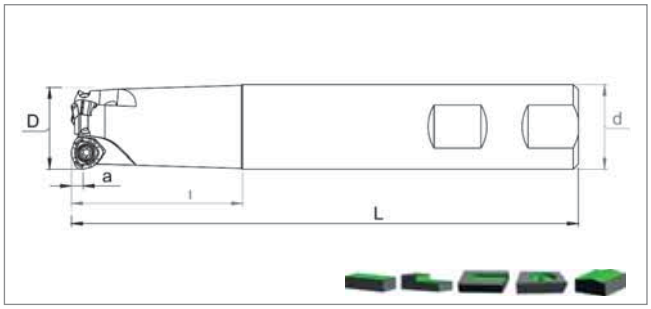

Ordering Code	Item Designation	Dimensions (mm)							Master Insert*
	HST WDMT 0603.. / 0804..		*D*	*d*	*Z*	*L*	*l*	*a*	
SM37403	HST WD06 D16 W16 L120 Z02-H	✓	16	16	2	120	30	1	WDMT 0603..
SM37410	HST WD06 D18 W16 L120 Z02-H	✓	18	16	2	120	30	1	
SM37427	HST WD06 D20 W20 L120 Z03-H	✓	20	20	3	120	30	1	
SM37434	HST WD06 D22 W20 L120 Z03-H	✓	22	20	3	120	30	1	
SM37441	HST WD08 D20 W20 L150 Z02-H	✓	20	20	2	150	40	1.5	WDMT 0804..
SM37458	HST WD08 D22 W20 L150 Z02-H	✓	22	20	2	150	30	1.5	
SM37465	HST WD08 D25 W25 L150 Z03-H	✓	25	25	3	150	40	1.5	
SM37472	HST WD08 D26 W25 L150 Z03-H	✓	26	25	3	150	30	1.5	
SM34914	HST WD08 D32 W32 L150 Z04-H	✓	32	32	4	150	40	1.5	
SM34907	HST WD08 D33 W32 L150 Z04-H	✓	33	32	4	150	30	1.5	

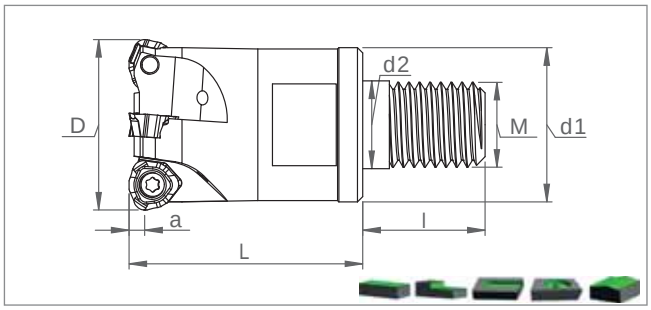

Ordering Code	Item Designation	Dimensions (mm)									Master Insert*
	MHT WDMT 0804..		*D*	*Z*	*d1*	*d2*	*L*	*l*	*M*	*a*	
SM37205	MHT WD08 D25 M12 L35 Z03-H	✓	25	3	21	12.5	35	23	12	1.5	WDMT 0804..
SM37212	MHT WD08 D32 M16 L43 Z04-H	✓	32	4	29	17	43	23	16	1.5	
SM37229	MHT WD08 D35 M16 L43 Z04-H	✓	35	4	29	17	43	23	16	1.5	

*Suitable Insert brand is SMTM

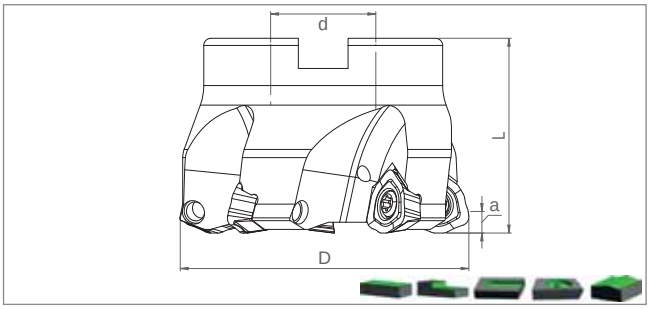

Ordering Code	Item Designation	Dimensions (mm)						Master Insert*
	HTK WDMT 0804.. / 1204..		*D*	*Z*	*d*	*L*	*a*	
SM33207	HTK WD08 D40 A16 Z04-H	✓	40	4	16	40	1.5	WDMT 0804..
SM33214	HTK WD08 D50 A22 Z05-H	✓	50	5	22	40	1.5	
SM33221	HTK WD12 D50 A22 Z04-H	✓	50	4	22	40	2	WDMT 1204..
SM33238	HTK WD12 D63 A22 Z05-H	✓	63	5	22	40	2	

Cooling mounting screw is optional / See Page “526” for cooling mounting screws.
İçten su vermeli montaj vidaları opsiyoneldir. / Bkz. Sayfa “526” İçten su vermeli montaj vidaları için.

Size Designation	Master Insert*	Spare Parts		
		Screw	Torx Key	Screw Torque Value
				N·m
D16 - D18	WDMT 0603..	SSV M2.5x6-9505	STK-T08-9908	1,0
D20 - D22		SSV M2.5x7-9506		
D20 - D22	WDMT 0804..	SSV M3x6-9507		1,9
D25 - D50		SSV M3x8-9508		
D50 - D63	WDMT 1204..	SSV M4x10 9514	STK-T15-9910	3,9

*Suitable Insert brand is SMTM

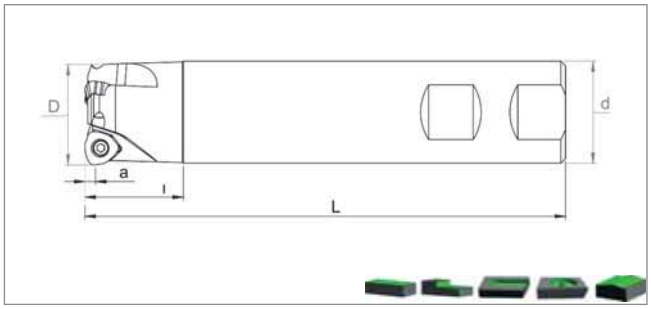

Ordering Code	Item Designation	Dimensions (mm)							Master Insert*
	HST WDMW 06T3		*D*	*d*	*Z*	*L*	*l*	*a*	
SM45002	HST WDMW06 D25 W25 L150 Z02-H	✓	25	25	2	150	40	1.5	WDMW 06T3..
SM45019	HST WDMW06 D32 W32 L150 Z03-H	✓	32	32	3	150	40	1.5	

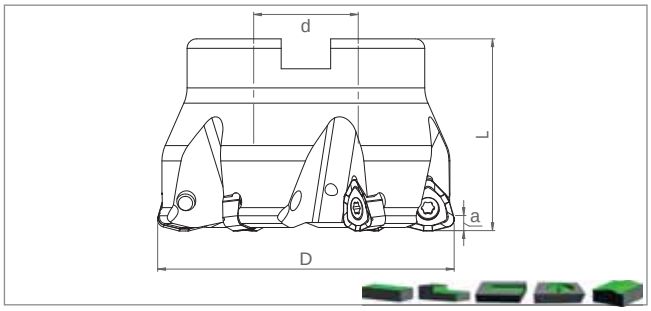

Ordering Code	Item Designation	Dimensions (mm)						Master Insert*
	HTK WDMW 06T3 / 0805 / 10X6		*D*	*Z*	*d*	*L*	*a*	
SM44265	HTK WDMW06 D40 A16 Z04-H	✓	40	4	16	40	1.5	WDMW 06T3..
SM44272	HTK WDMW06 D50 A22 Z05-H	✓	50	5	22	40	1.5	
SM44289	HTK WDMW08 D50 A22 Z04-H	✓	50	4	22	40	2	WDMW 0805..
SM44296	HTK WDMW08 D63 A22 Z05-H	✓	63	5	22	40	2	
SM46832	HTK WDMW10 D125 B40 Z06	-	125	6	40	63	2.5	WDMW 10X6..
SM46849	HTK WDMW10 D160 C40 Z07	-	160	7	40	63	2.5	

Cooling mounting screw is optional / See Page "526" for cooling mounting screws.
İçten su vermeli montaj vidaları opsiyoneldir. / Bkz. Sayfa "526" İçten su vermeli montaj vidaları için.

Size Designation	Master Insert*	Spare Parts		
		Screw	Torx Key	Screw Torque Value
				N·m
D25 - D50	WDMW 06T3..	SSV M3.5x8-SC-9513	STK-T10-9909	2,7
D50 - D63	WDMW 0805..	SSV M4.5x11-9518	STK-T20-9911	3,9
D125 - D160	WDMW 10X6..	SSV M5x13-9519		5,5

*Suitable Insert brand is DJT

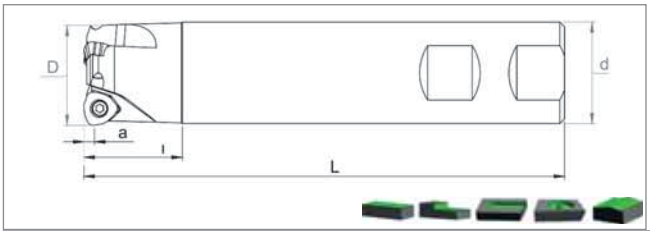

Ordering Code	Item Designation	Dimensions (mm)							Master Insert*
	HST WOM. 04T2		*D*	*d*	*Z*	*L*	*l*	*a*	
SM44944	HST WO04 D16 W16 L150 Z02-H	✓	16	16	2	150	40	1.2	WOM. 04T2..
SM44951	HST WO04 D20 W20 L150 Z03-H	✓	20	20	3	150	40	1.2	

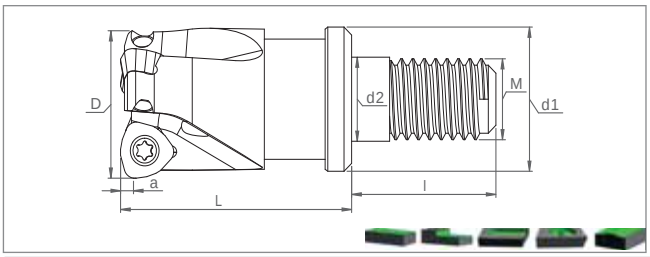

Ordering Code	Item Designation	Dimensions (mm)									Master Insert*
	MHT WOM. 04T2		*D*	*Z*	*d1*	*d2*	*L*	*l*	*M*	*a*	
SM44968	MHT WO04 D16 M08 L25 Z02-H	✓	16	2	15	8.5	25	17	8	1.2	WOM. 04T2..
SM44975	MHT WO04 D20 M10 L30 Z03-H	✓	20	3	18	10.5	30	19	10	1.2	

Size Designation	Master Insert*	Spare Parts		
		Screw	Torx Key	Screw Torque Value
				N·m
D16 - D20	WOM.04T2..	SSV M2.5x6-9505	STK-T08-9908	1,0

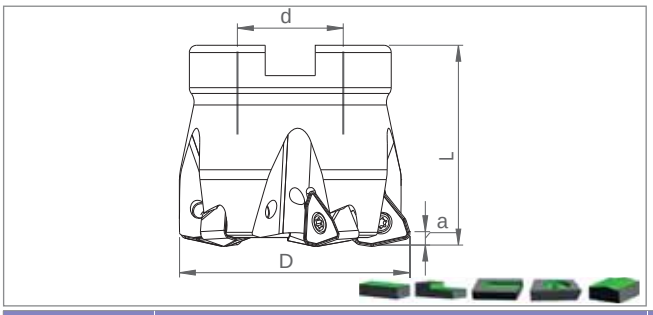

Ordering Code	Item Designation	Dimensions (mm)						Master Insert**
	HTK WOEJ 0905..		*D*	*Z*	*d*	*L*	*a*	
SM43442	HTK WO09 D40 A16 Z04-H	✓	40	4	16	40	1.6	WOEJ 0905..
SM43459	HTK WO09 D50 A22 Z05-H	✓	50	5	22	40	1.6	
SM43466	HTK WO09 D63 A22 Z06-H	✓	63	6	22	40	1.6	

Cooling mounting screw is optional / See Page "526" for cooling mounting screws.
İçten su vermeli montaj vidaları opsiyoneldir. / Bkz. Sayfa "526" içten su vermeli montaj vidaları için.

Size Designation	Master Insert**	Spare Parts		
		Screw	Torx Key	Screw Torque Value
				N·m
D40 - D63	WOEJ 0905..	SSV M3x8-9508	STK-T08-9908	1,9

*Suitable Insert brand is DJT
**Suitable Insert brand is KNMTL

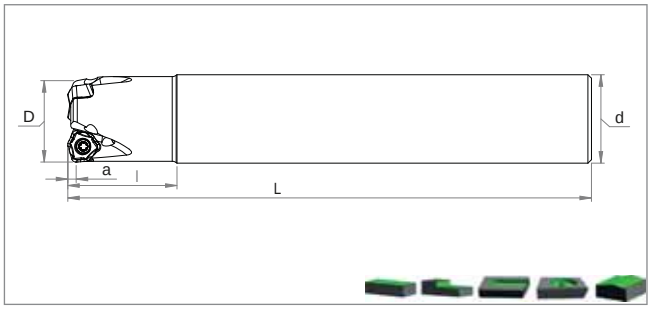

Ordering Code	Item Designation	Dimensions (mm)							Master Insert*
	HST WXCU 05T3..		*D*	*d*	*Z*	*L*	*l*	*a*	
SM62078	HST WX05 D25 W25 L150 Z03-H	✓	25	25	3	150	40	1	WXCU 05T3..
SM62085	HST WX05 D26 W25 L150 Z03-H	✓	26	25	3	150	30	1	
SM72008	HST WX05 D32 W32 L150 Z04-H	✓	32	32	4	150	40	1	

Size Designation	Master Insert*	Spare Parts		
		Screw	Torx Key	Screw Torque Value
				N·m
D25 - D32	WXCU 05T3..	SSV M3x8-9508	STK-T08-9908	1,9

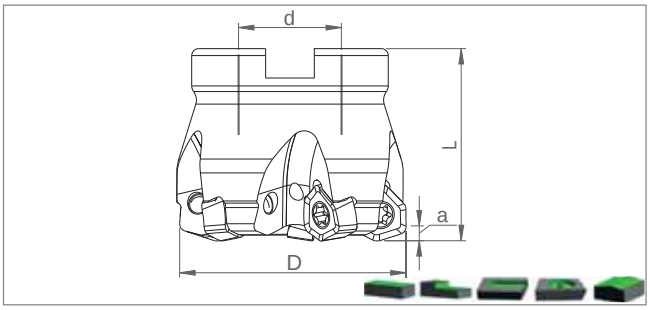

Ordering Code	Item Designation	Dimensions (mm)						Master Insert*
	HTK WXCU 0705..		*D*	*Z*	*d*	*L*	*a*	
SM46764	HTK WX07 D40 A16 Z04-H	✓	40	4	16	40	1.5	WXCU 0705..
SM46771	HTK WX07 D50 A22 Z05-H	✓	50	5	22	40	1.5	
SM46788	HTK WX07 D63 A22 Z06-H	✓	63	6	22	40	1.5	

Cooling mounting screw is optional / See Page "526" for cooling mounting screws.
İçten su vermeli montaj vidaları opsiyoneldir. / Bkz. Sayfa "526" İçten su vermeli montaj vidaları için.

Size Designation	Master Insert*	Spare Parts		
		Screw	Torx Key	Screw Torque Value
				N·m
D40	WXCU 0705..	SSV M4x9x5-9528	STK-T15-9910	3,9
D50 - D63		SSV M4x12x5-9529		

*Suitable Insert brand is ISC

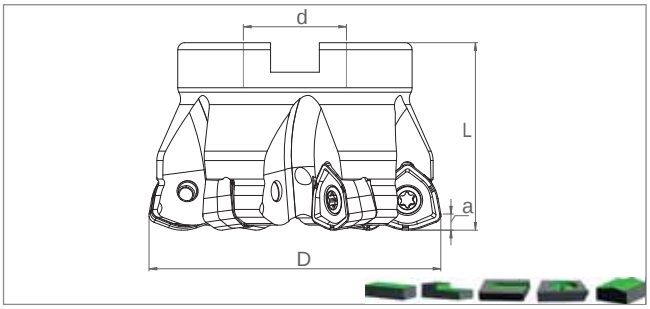

Ordering Code	Item Designation	Dimensions (mm)						Master Insert*
	HTK 218.21		*D*	*Z*	*d*	*L*	*a*	
SM40274	HTK 218.21 D50 A22 Z05-H	✓	50	5	22	40	1.8	218.21
SM40281	HTK 218.21 D63 A22 Z06-H	✓	63	6	22	40	1.8	
SM40298	HTK 218.21 D80 A27 Z07-H	✓	80	7	27	50	1.8	
SM73883	**HTK 218.21 D100 A32 Z09-H**	✓	**100**	**9**	**32**	**50**	**1.8**	

Cooling mounting screw is optional / See Page "526" for cooling mounting screws.
İçten su vermeli montaj vidaları opsiyoneldir. / Bkz. Sayfa "526" İçten su vermeli montaj vidaları için.

Size Designation	Master Insert*	Spare Parts		
		Screw	Torx Key	Screw Torque Value
				N·m
D50 - D100	218.21	SSV M4x12x5-9529	STK-T15-9910	3,9

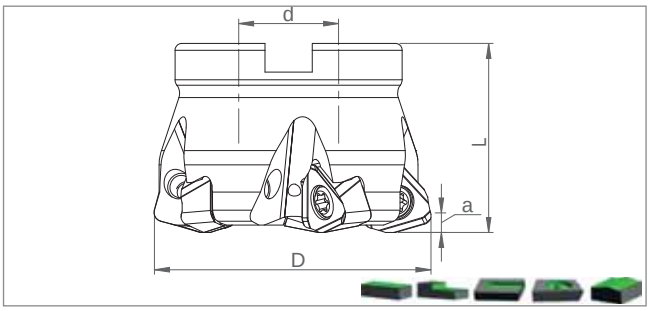

Ordering Code	Item Designation	Dimensions (mm)						Master Insert**
	HTK WNMU 0907..		*D*	*Z*	*d*	*L*	*a*	
SM44302	HTK WNMU09 D63 A22 Z05-H	✓	63	5	22	40	2.25	WNMU 0907..
SM44319	HTK WNMU09 D66 A27 Z06-H	✓	66	6	27	50	2.25	

Cooling mounting screw is optional / See Page "526" for cooling mounting screws.
İçten su vermeli montaj vidaları opsiyoneldir. / Bkz. Sayfa "526" İçten su vermeli montaj vidaları için.

Size Designation	Master Insert* **	Spare Parts		
		Screw	Torx Key	Screw Torque Value
				N·m
D63 - D66	WNMU 0907..	SSV M5x13-9519	STK-T15-9910	5,5

*Suitable Insert brand is SCO
**Suitable Insert brand is DJT

HIGH FEED MILLING TOOLS

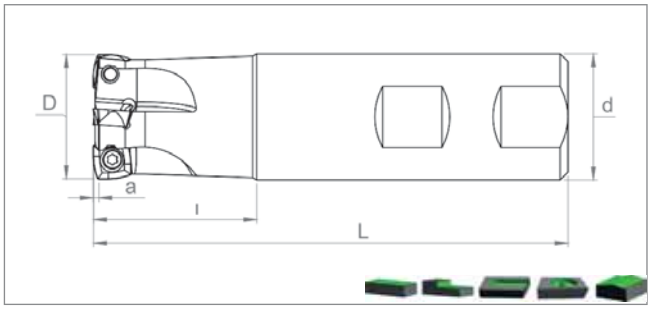

Ordering Code	Item Designation	Dimensions (mm)							Master Insert*
	HST SDMT 09T3..		*D*	*d*	*Z*	*L*	*l*	*a*	
SM26445	HST SDMT09 D25 W25 L150 Z02-H	✓	25	25	2	150	40	1.4	SDMT 09T3..
SM26452	HST SDMT09 D32 W25 L150 Z03-H	✓	32	25	3	150	30	1.4	
SM26469	HST SDMT09 D35 W32 L150 Z03-H	✓	35	32	3	150	30	1.4	

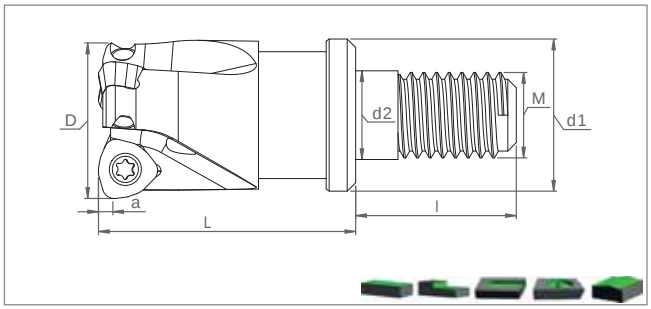

Ordering Code	Item Designation	Dimensions (mm)									Master Insert*
	MHT SDMT 09T3..		*D*	*Z*	*d1*	*d2*	*L*	*l*	*M*	*a*	
SM25813	MHT SDMT09 D25 M12 L35 Z02-H	✓	25	2	21	12.5	35	23	12	1.4	SDMT 09T3..
SM25820	MHT SDMT09 D32 M16 L43 Z03-H	✓	32	3	29	17	43	23	16	1.4	
SM25837	MHT SDMT09 D35 M16 L43 Z03-H	✓	35	3	29	17	43	23	16	1.4	
SM25844	MHT SDMT09 D40 M16 L43 Z04-H	✓	40	4	29	17	43	23	16	1.4	

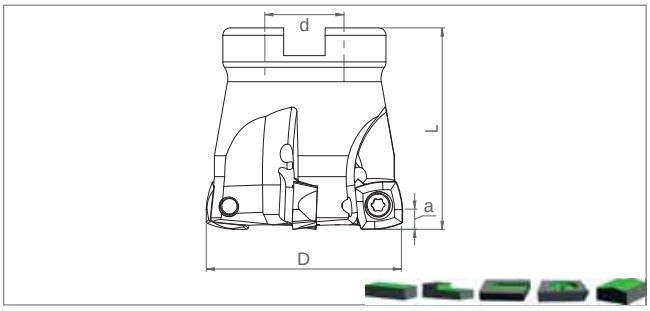

Ordering Code	Item Designation	Dimensions (mm)						Master Insert*
	HTK SDMT 09T3.. / 1204..		*D*	*Z*	*d*	*L*	*a*	
SM39117	HTK SDMT09 D40 A16 Z04-H	✓	40	4	16	40	1.4	SDMT 09T3..
SM39124	HTK SDMT09 D50 A22 Z05-H	✓	50	5	22	40	1.4	
SM39131	HTK SDMT09 D63 A22 Z06-H	✓	63	6	22	40	1.4	
SM39148	HTK SDMT12 D50 A22 Z04-H	✓	50	4	22	40	1.8	SDMT 1204..
SM39155	HTK SDMT12 D63 A22 Z05-H	✓	63	5	22	40	1.8	

Size Designation	Master Insert*	Spare Parts		
		Screw	Torx Key	Screw Torque Value
				N·m
D25 - D63	SDMT 09T3..	SSV M3.5x8 SC 9513	STK-T10-9909	2,7
D50 - D63	SDMT 1204..	SSV M4x10-9514	STK-T15-9910	3,9

*Suitable Insert brand is ZCC-CT

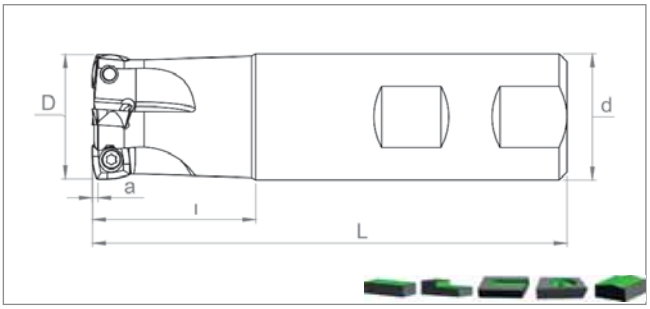

Ordering Code	Item Designation	Dimensions (mm)							Master Insert*
	HST SDMT / SDMW 1204..		*D*	*d*	*Z*	*L*	*l*	*a*	
SM70172	HST SDMT1204 D32 W32 L150 Z02-H	✓	32	32	2	150	40	1.8	SDMT 1204..
SM70189	HST SDMT1204 D40 W32 L150 Z03-H	✓	40	32	3	150	30	1.8	

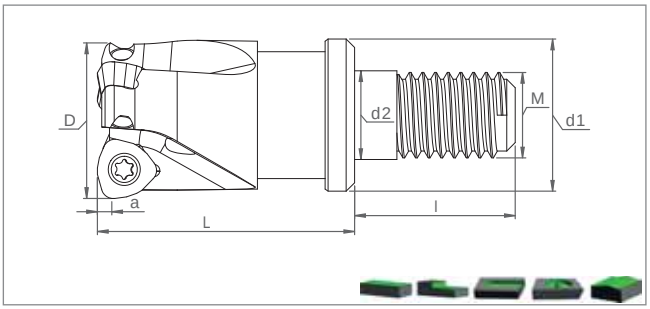

Ordering Code	Item Designation	Dimensions (mm)									Master Insert*
	MHT SDMT / SDMW 1204..		*D*	*Z*	*d1*	*d2*	*L*	*l*	*M*	*a*	
SM70196	MHT SDMT1204 D32 M16 L43 Z02-H	✓	32	2	29	17	43	23	16	1.8	SDMT 1204..
SM70202	MHT SDMT1204 D40 M16 L43 Z03-H	✓	40	3	29	17	43	23	16	1.8	

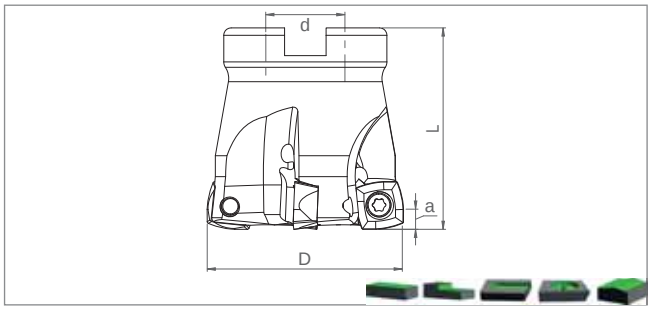

Ordering Code	Item Designation	Dimensions (mm)						Master Insert*
	HTK SDMT / SDMW 1204..		*D*	*Z*	*d*	*L*	*a*	
SM70219	HTK SDMT1204 D50 A22 Z04-H	✓	50	4	22	40	1.4	SDMT 1204..
SM70226	HTK SDMT1204 D63 A22 Z05-H	✓	63	5	22	40	1.4	
SM70233	HTK SDMT1204 D66 A27 Z05-H	✓	66	6	27	50	1.4	

Size Designation	Master Insert*	Spare Parts		
		Screw	Torx Key	Screw Torque Value
				N·m
D32 - D66	SDMT 1204..	SSV M4x10-9514	STK-T15-9910	3,9

*Suitable Insert brand is YG-1

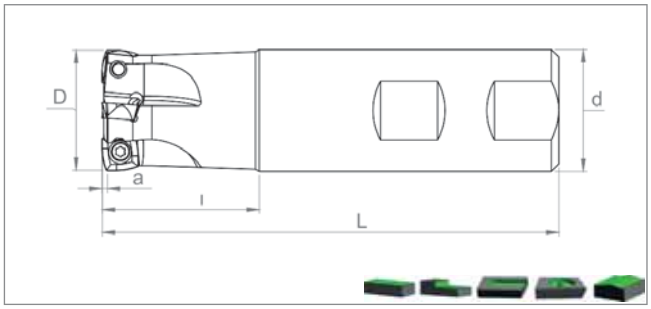

Ordering Code	Item Designation	Dimensions (mm)							Master Insert*
	HST SDKX 0904..		*D*	*d*	*Z*	*L*	*l*	*a*	
SM26490	HST SDKX09 D25 W25 L120 Z02-H	✓	25	25	2	120	30	1.4	SDKX 0904..
SM26506	HST SDKX09 D25 C25 L200 Z02	-	25	25	2	200	50	1.4	
SM26513	HST SDKX09 D32 W32 L150 Z03-H	✓	32	32	3	150	40	1.4	
SM26520	HST SDKX09 D32 C32 L200 Z03	-	32	32	3	200	50	1.4	

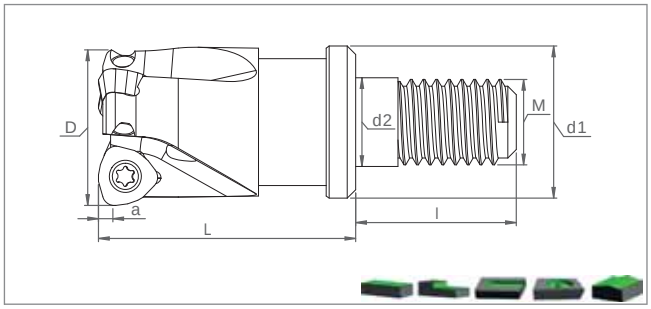

Ordering Code	Item Designation	Dimensions (mm)									Master Insert*
	MHT SDKX 0904..		*D*	*Z*	*d1*	*d2*	*L*	*l*	*M*	*a*	
SM36932	MHT SDKX09 D25 M12 L35 Z02-H	✓	25	2	21	12.5	35	23	12	1.4	SDKX 0904..
SM36963	MHT SDKX09 D32 M16 L43 Z03-H	✓	32	3	29	17	43	23	16	1.4	
SM36994	MHT SDKX09 D35 M16 L43 Z03-H	✓	35	3	29	17	43	23	16	1.4	
SM37007	MHT SDKX09 D40 M16 L43 Z04-H	✓	40	4	29	17	43	23	16	1.4	

Size Designation	Master Insert*	Spare Parts		
		Screw	Torx Key	Screw Torque Value N·m
D25 - D40	SDKX 0904..	SSV M3.5x10-9511	STK-T15-9910	2,7

*Suitable Insert brand is LMN

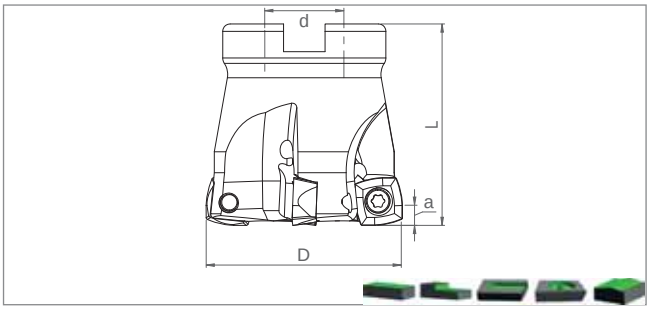

Ordering Code	Item Designation	Dimensions (mm)						Master Insert*
	HTK SDKX 0904.. / 1205..		*D*	*Z*	*d*	*L*	*a*	
SM28029	HTK SDKX09 D40 A16 Z04-H	✓	40	4	16	40	1.4	SDKX 0904..
SM28012	HTK SDKX09 D50 A22 Z05-H	✓	50	5	22	40	1.4	
SM28005	HTK SDKX09 D63 A22 Z06-H	✓	63	6	22	40	1.4	
SM39162	HTK SDKX12 D50 A22 Z04-H	✓	50	4	22	40	1.8	SDKX 1205..
SM39179	HTK SDKX12 D63 A22 Z05-H	✓	63	5	22	40	1.8	

Cooling mounting screw is optional / See Page “526” for cooling mounting screws.
İçten su vermeli montaj vidaları opsiyoneldir. / Bkz. Sayfa “526” İçten su vermeli montaj vidaları için.

Size Designation	Master Insert*	Spare Parts		
		Screw	Torx Key	Screw Torque Value N·m
D25 - D63	SDKX 0904..	SSV M3.5x10-9511	STK-T15-9910	2,7
D50 - D63	SDKX 1205..			

*Suitable Insert brand is LMN

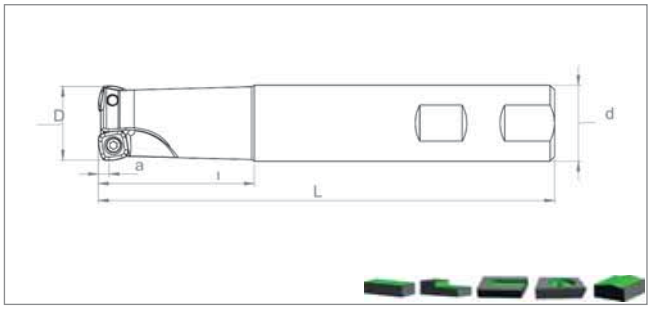

Ordering Code	Item Designation	Dimensions (mm)							Master Insert*
	HST XPLX 0603.. / XDLX 09T3..		*D*	*d*	*Z*	*L*	*l*	*a*	
SM29507	HST XP06 D16 W16 L150 Z02-H	✓	16	16	2	150	40	1	XPLX 0603..
SM29484	HST XP06 D16 C16 L200 Z02	-	16	16	2	200	40	1	
SM29491	HST XP06 D17 W16 L150 Z02-H	✓	17	16	2	150	30	1	
SM29477	HST XP06 D17 W16 L200 Z02	-	17	16	2	200	30	1	
SM29514	HST XP06 D20 W20 L150 Z03-H	✓	20	20	3	150	40	1	
SM29521	HST XP06 D21 W20 L150 Z03-H	✓	21	20	3	150	30	1	
SM29545	HST XD09 D25 W25 L150 Z02-H	✓	25	25	2	150	40	1.2	XDLX 09T3..
SM29552	HST XD09 D25 W25 L200 Z02	-	25	25	2	200	50	1.2	
SM29538	HST XD09 D26 W25 L150 Z02-H	✓	26	25	2	150	30	1.2	
SM29569	HST XD09 D26 W25 L200 Z02	-	26	25	2	200	30	1.2	

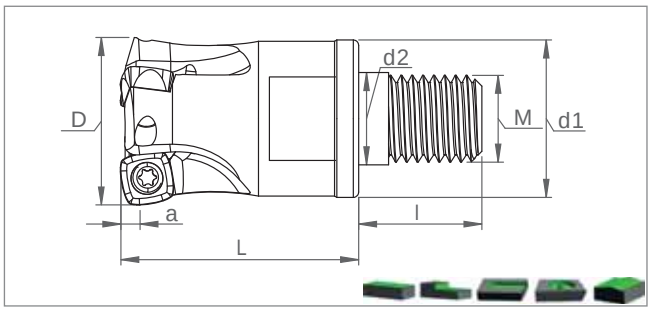

Ordering Code	Item Designation	Dimensions (mm)								Master Insert*
	MHT XPLX 0603.. / XDLT 09T3..		*D*	*Z*	*d1*	*d2*	*L*	*l*	*M*	*a*	
SM36734	MHT XP06 D16 M08 L25 Z02-H	✓	16	2	15	8.5	25	17	8	1	XPLX 0603..
SM36765	MHT XP06 D20 M10 L30 Z03-H	✓	20	3	18	10.5	30	19	10	1	
SM36772	MHT XP06 D22 M10 L30 Z03-H	✓	22	3	18	10.5	30	19	10	1	
SM29446	MHT XD09 D25 M12 L35 Z02-H	✓	25	2	21	12.5	35	23	12	1.2	XPLX 09T3..
SM27893	MHT XD09 D32 M16 L43 Z03-H	✓	32	3	29	17	43	23	16	1.2	
SM29453	MHT XD09 D35 M16 L43 Z03-H	✓	35	3	29	17	43	23	16	1.2	
SM29460	MHT XD09 D40 M16 L43 Z04-H	✓	40	4	29	17	43	23	16	1.2	
SM27909	MHT XD09 D42 M16 L43 Z04-H	✓	42	4	29	17	43	23	16	1.2	

*Suitable Insert brand is CRTZ

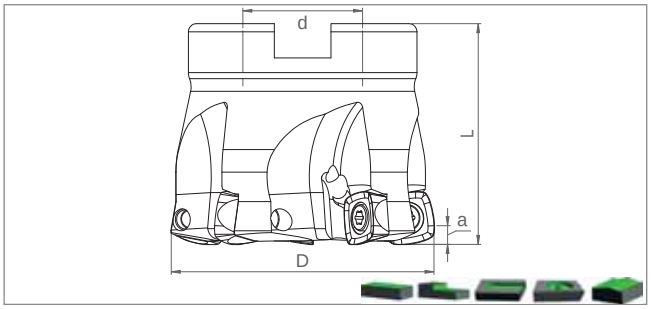

Ordering Code	Item Designation	Dimensions (mm)						Master Insert*
	HTK XDLX 09T3..		*D*	*Z*	*d*	*L*	*a*	
SM33092	HTK XD09 D40 A16 Z04-H	✓	40	4	16	40	1.2	XDLX 09T3.
SM33108	HTK XD09 D50 A22 Z05-H	✓	50	5	22	40	1.2	
SM33115	HTK XD09 D63 A22 Z06-H	✓	63	6	22	40	1.2	

Cooling mounting screw is optional / See Page "526" for cooling mounting screws.
İçten su vermeli montaj vidaları opsiyoneldir. / Bkz. Sayfa "526" İçten su vermeli montaj vidaları için.

Size Designation	Master Insert*	Spare Parts		
		Screw	Torx Key	Screw Torque Value
				N·m
D16 - D22	XPLX 0603..	SSV M2.5x6-9505	STK-T08-9908	1,0
D25 - D32	XDLX 09T3..	SSV M3.5x8-9510	STK-T15-9910	2,7
D35 - D63		SSV M3.5x10-9511		

*Suitable Insert brand is CRTZ

HIGH FEED MILLING TOOLS

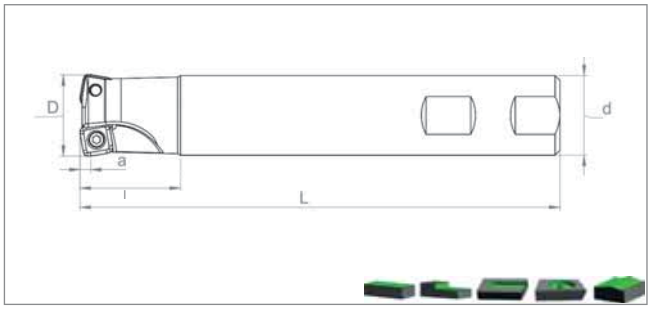

Ordering Code	Item Designation	Dimensions (mm)							Master Insert*
	HST R210.09..		*D*	*d*	*Z*	*L*	*l*	*a*	
SM37366	HST R210.09 D25 W25 L150 Z02-H	✓	25	25	2	150	40	1.2	R210.09..
SM37373	HST R210.09 D26 W25 L150 Z02-H	✓	26	25	2	150	30	1.2	
SM37380	HST R210.09 D32 W32 L150 Z03-H	✓	32	32	3	150	40	1.2	
SM37397	HST R210.09 D33 W32 L150 Z03-H	✓	33	32	3	150	30	1.2	

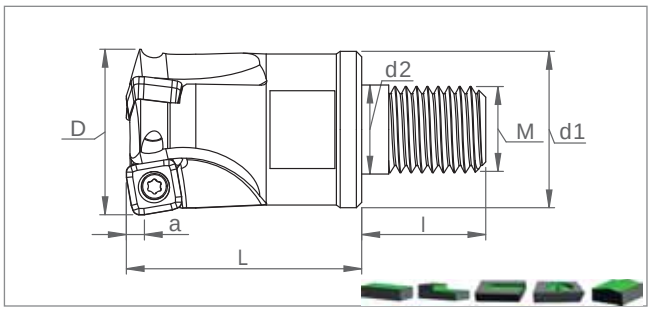

Ordering Code	Item Designation	Dimensions (mm)									Master Insert*
	MHT R210.09..		*D*	*Z*	*d1*	*d2*	*L*	*l*	*M*	*a*	
SM37014	MHT R210.09 D25 M12 L35 Z02-H	✓	25	2	21	12.5	35	23	12	1.2	R210.09..
SM37021	MHT R210.09 D32 M16 L43 Z03-H	✓	32	3	29	17	43	23	16	1.2	
SM37038	MHT R210.09 D35 M16 L43 Z03-H	✓	35	3	29	17	43	23	16	1.2	
SM40175	MHT R210.09 D42 M16 L43 Z04-H	✓	42	4	29	17	43	23	16	1.2	

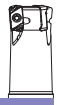

Size Designation	Master Insert*	Spare Parts		
		Screw	Torx Key	Screw Torque Value N·m
D25 - D26	R210.09..	SSV M3.5x8-9510	STK-T15-9910	2,7
D32 - D35		SSV M3.5x10-9511		

*Suitable Insert brand is SNDVK

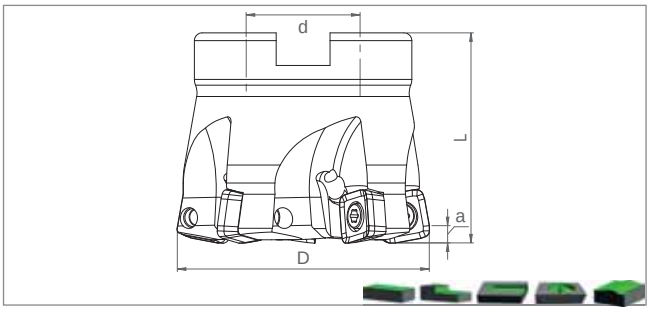

Ordering Code	Item Designation	Dimensions (mm)						Master Insert*
	HTK R210.09..		*D*	*Z*	*d*	*L*	*a*	
SM32996	HTK R210.09 D40 A16 Z04-H	✓	40	4	16	40	1.2	R210.09..
SM33009	HTK R210.09 D50 A22 Z05-H	✓	50	5	22	40	1.2	
SM33016	HTK R210.09 D63 A22 Z06-H	✓	63	6	22	40	1.2	

Cooling mounting screw is optional / See Page "526" for cooling mounting screws.
İçten su vermeli montaj vidaları opsiyoneldir. / Bkz. Sayfa "526" İçten su vermeli montaj vidaları için.

Size Designation	Master Insert*	Spare Parts		
		Screw	Torx Key	Screw Torque Value N·m
D40 - D63	R210.09..	SSV M3.5x10-9511	STK-T15-9910	2,7

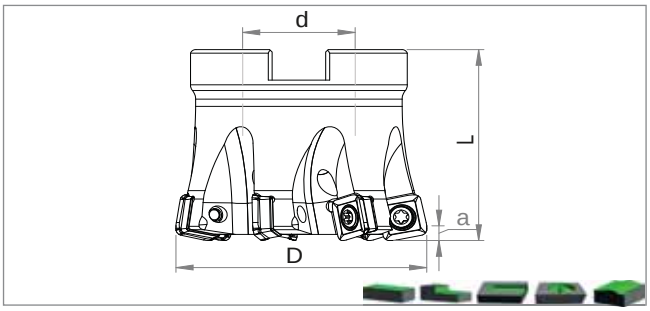

Ordering Code	Item Designation	Dimensions (mm)						Master Insert*
	HTK SOMT 0904..		*D*	*Z*	*d*	*L*	*a*	
NEW **SM72046**	**HTK SO09 D40 A16 Z05-H**	✓	**40**	**5**	**16**	**40**	**1.2**	SOMT 0904..
NEW **SM72053**	**HTK SO09 D50 A22 Z07-H**	✓	**50**	**7**	**22**	**40**	**1.2**	
NEW **SM72060**	**HTK SO09 D52 A22 Z07-H**	✓	**52**	**7**	**22**	**40**	**1.2**	
NEW **SM72077**	**HTK SO09 D63 A22 Z08-H**	✓	**63**	**8**	**22**	**40**	**1.2**	

Size Designation	Master Insert*	Spare Parts		
		Screw	Torx Key	Screw Torque Value N·m
D40 - D63	SOMT 0904..	SSV M3x7-9527	STK-T08-9908	1,9

*Suitable Insert brand is SNDVK
**Suitable Insert brand is ISC

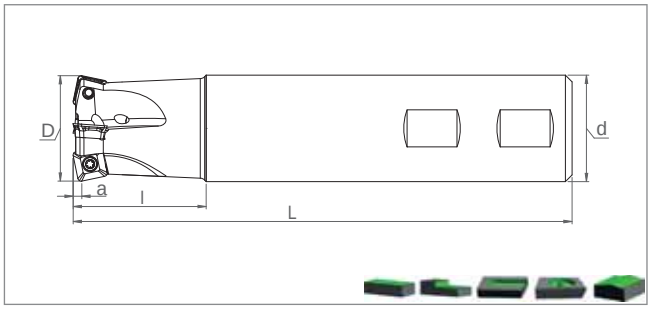

Ordering Code	Item Designation	Dimensions (mm)							Master Insert*
	HST SWMT 0904..		*D*	*d*	*Z*	*L*	*l*	*a***	
SM58934	HST SW09 D25 W25 L150 Z03-H	✓	25	25	3	150	40	1	SWMT 0904..
SM61804	**HST SW09 D26 W25 L150 Z03-H**	✓	**26**	**25**	**3**	**150**	**30**	**1**	
SM61781	**HST SW09 D26 C25 L200 Z03-H**	✓	**26**	**25**	**3**	**200**	**30**	**1**	
SM61798	**HST SW09 D26 C25 L250 Z03-H**	✓	**26**	**25**	**3**	**250**	**30**	**1**	
SM58941	HST SW09 D32 W32 L150 Z04-H	✓	32	32	4	150	40	1	

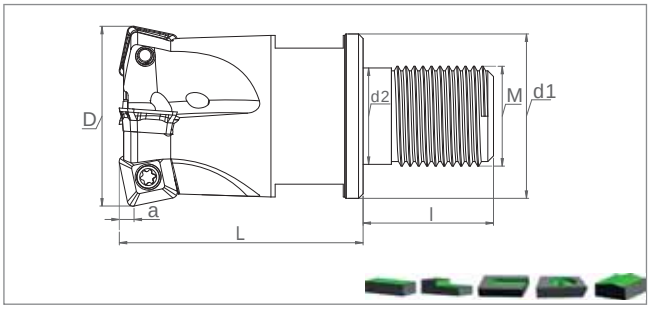

Ordering Code	Item Designation	Dimensions (mm)									Master Insert*
	MHT SWMT 0904..		*D*	*Z*	*d1*	*d2*	*L*	*l*	*M*	*a***	
SM58958	MHT SW09 D25 M12 L35 Z03-H	✓	25	3	21	12.5	35	23	12	1	SWMT 0904..
SM58965	MHT SW09 D32 M16 L43 Z04-H	✓	32	4	29	17	43	23	16	1	

Size Designation	Master Insert*	Spare Parts		
		Screw	Torx Key	Screw Torque Value
D25 - D32	SWMT 0904..	SSV M3x8-9508	STK-T08-9908	1,9 N·m

*Suitable Insert brand is TNGLY
** "a" may vary with insert type / "a" kesici uc tipine göre değişkenlik gösterebilir

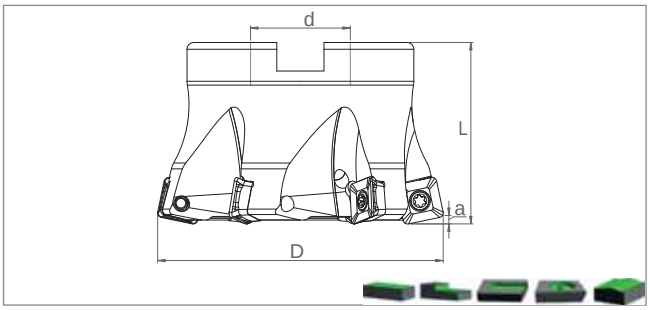

Ordering Code	Item Designation	Dimensions (mm)						Master Insert*
	HTK SWMT 0904.. / 1506..		*D*	*Z*	*d*	*L*	*a***	
SM53038	HTK SW09 D40 A16 Z04-H	✓	40	4	16	40	1	SWMT 0904..
SM53045	HTK SW09 D50 A22 Z05-H	✓	50	5	22	40	1	
SM53052	HTK SW09 D52 A22 Z05-H	✓	52	5	22	40	1	
SM53069	HTK SW09 D63 A22 Z06-H	✓	63	6	22	40	1	
SM53076	HTK SW15 D63 A22 Z04-H	✓	63	4	22	40	2	SWMT 1506..
SM53083	HTK SW15 D66 A27 Z04-H	✓	66	4	27	50	2	
SM53090	HTK SW15 D80 A27 Z05-H	✓	80	5	27	50	2	

Cooling mounting screw is optional / See Page “526” for cooling mounting screws.
İçten su vermeli montaj vidaları opsiyoneldir. / Bkz. Sayfa “526” İçten su vermeli montaj vidaları için.

Size Designation	Master Insert*	Spare Parts		
		Screw	Torx Key	Screw Torque Value N·m
D40 - D63	SWMT 0904..	SSV M3x8-9508	STK-T08-9908	1,9
D63 - D80	SWMT 1506..	SSV M5x13-9519	STK-T20-9911	5,5

*Suitable Insert brand is TNGLT
** ”a” may vary with insert type / ”a” kesici uc tipine göre değişkenlik gösterebilir

HIGH FEED MILLING TOOLS

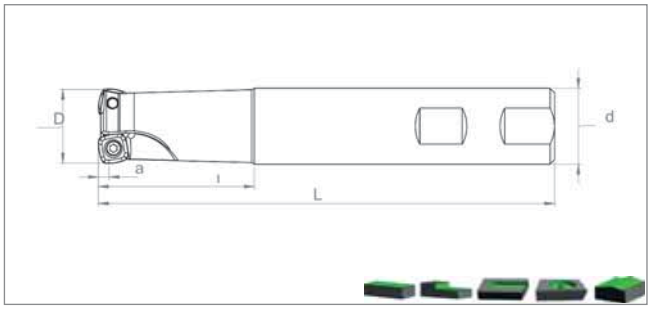

Ordering Code	Item Designation	Dimensions (mm)							Master Insert*
	HST SPNW / SPET / SPMT 1004..		*D*	*d*	*Z*	*L*	*l*	*a*	
SM44210	HST SP10 D25 W25 L150 Z02-H	✓	25	25	2	150	40	1.6	SP.. 1004..
SM44227	HST SP10 D32 W32 L150 Z03-H	✓	32	32	3	150	40	1.6	

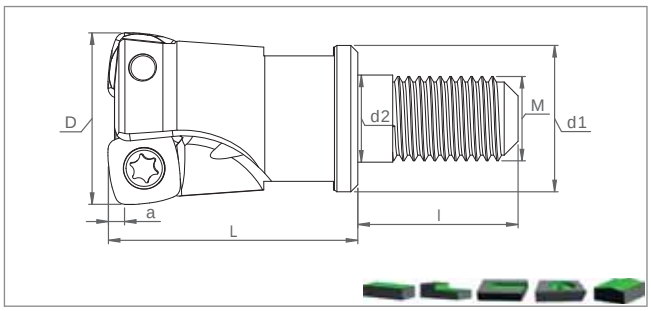

Ordering Code	Item Designation	Dimensions (mm)									Master Insert*
	MHT SPNW / SPET / SPMT 1004..		*D*	*Z*	*d1*	*d2*	*L*	*l*	*M*	*a*	
SM44982	MHT SP10 D25 M12 L35 Z02-H	✓	25	2	21	12.5	35	23	12	1.6	SP..1004..
SM51676	MHT SP10 D32 M16 L43 Z03-H	✓	32	3	29	17	43	23	16	1.6	

Size Designation	Master Insert*	Spare Parts		
		Screw	Torx Key	Screw Torque Value
				N·m
D25	SP.. 1004..	SSV M3.5x8-9510	STK-T15-9910	2,7
D32		SSV M3.5x10-9511		

*Suitable Insert brand is DJT

SMOXH® CUTTING TOOLS
Kalitenin Yükselen Gücü

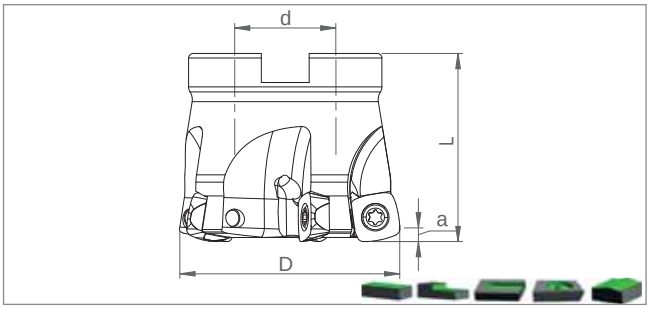

Ordering Code	Item Designation	Dimensions (mm)						Master Insert*
	HTK SP.. 1004.. / 1405..		*D*	*Z*	*d*	*L*	*a*	
SM43909	HTK SP10 D40 A16 Z04-H	✓	40	4	16	40	1.6	SP.. 1004..
SM43916	HTK SP10 D50 A22 Z05-H	✓	50	5	22	40	1.6	
SM43923	HTK SP10 D63 A22 Z06-H	✓	63	6	22	40	1.6	
SM43930	HTK SP14 D50 A22 Z04-H	✓	50	4	22	40	2.05	SP.. 1405..
SM50297	HTK SP14 D63 A22 Z05-H	✓	63	5	22	40	2.05	

Cooling mounting screw is optional / See Page “526” for cooling mounting screws.
İçten su vermeli montaj vidaları opsiyoneldir. / Bkz. Sayfa “526” İçten su vermeli montaj vidaları için.

Size Designation	Master Insert*	Spare Parts		
		Screw	Torx Key	Screw Torque Value
D40 - D63	SP.. 1004..	SSV M3.5x10-9511	STK-T15-9910	2,7 N·m
D50 - D63	SP.. 1405..	SSV M5x13-9519	STK-T20-9911	5,5 N·m

*Suitable Insert brand is DJT

HIGH FEED MILLING TOOLS

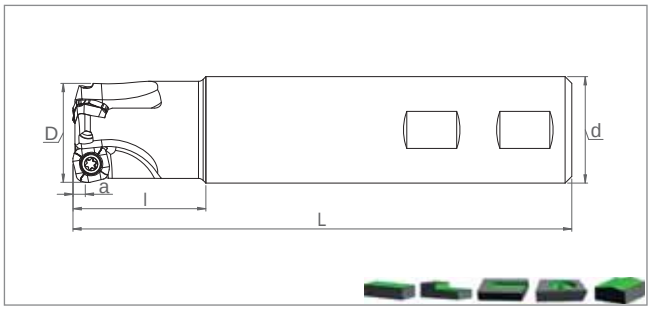

Ordering Code	Item Designation	Dimensions (mm)							Master Insert*
	HST SOMT 1004..		*D*	*d*	*Z*	*L*	*l*	*a*	
SM52680	HST SO10 D32 W32 L150 Z03-H	✓	32	32	3	150	40	1.2	SOMT 1004..
SM52604	HST SO10 D35 W32 L150 Z03-H	✓	35	32	3	150	30	1.2	
SM52635	HST SO10 D40 W32 L150 Z04-H	✓	40	32	4	150	40	1.2	

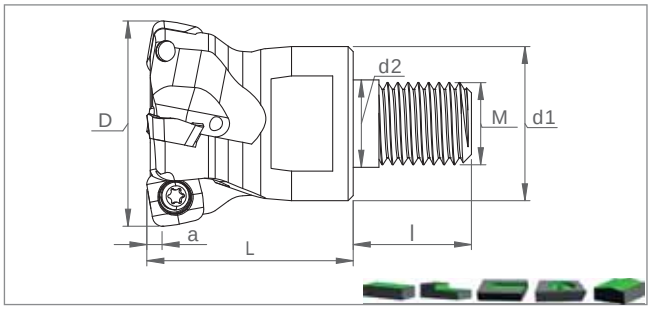

Ordering Code	Item Designation	Dimensions (mm)									Master Insert*
	MHT SOMT 1004..		*D*	*Z*	*d1*	*d2*	*L*	*l*	*M*	*a*	
SM37045	MHT SO10 D32 M16 L43 Z03-H	✓	32	3	29	17	43	23	16	1.2	SOMT 1004..
SM37052	MHT SO10 D35 M16 L43 Z03-H	✓	35	3	29	17	43	23	16	1.2	
SM37076	MHT SO10 D40 M16 L43 Z04-H	✓	40	4	29	17	43	23	16	1.2	
SM29354	MHT SO10 D42 M16 L43 Z04-H	✓	42	4	29	17	43	23	16	1.2	

Size Designation	Master Insert*	Spare Parts		
		Screw	Torx Key	Screw Torque Value
				N·m
D32 - D42	SOMT 1004..	SSV M4x9x5-9528	STK-T15-9910	3,9

*Suitable Insert brand is KYCR

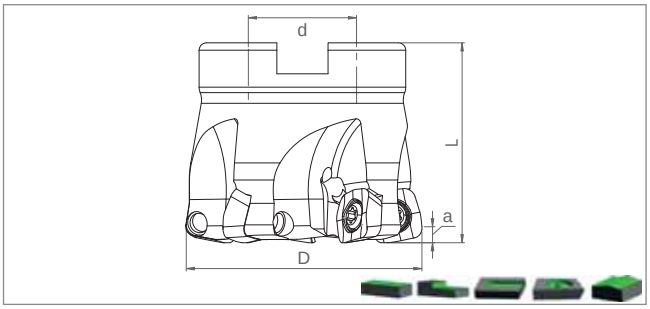

Ordering Code	Item Designation	Dimensions (mm)						Master Insert*
	HTK SOMT 1004.. / 1405..		*D*	*Z*	*d*	*L*	*a*	
SM33061	HTK SO10 D40 A16 Z04-H	✓	40	4	16	40	1.2	SOMT 1004..
SM33078	HTK SO10 D50 A22 Z05-H	✓	50	5	22	40	1.2	
SM33085	HTK SO10 D63 A22 Z06-H	✓	63	6	22	40	1.2	
SM64287	**HTK SO14 D50 A22 Z04-H**	✓	**50**	**4**	**22**	**40**	**2.7**	SOMT 1405..
SM43411	HTK SO14 D63 A22 Z05-H	✓	63	5	22	40	2.7	
SM43428	HTK SO14 D66 A27 Z05-H	✓	66	5	27	50	2.7	
SM43435	HTK SO14 D80 A27 Z06-H	✓	80	6	27	50	2.7	
SM01996	HTK SO14 D100 A32 Z07-H	✓	100	7	32	50	2.7	
SM02009	HTK SO14 D125 B40 Z08	-	125	8	40	63	2.7	
SM02016	HTK SO14 D160 C40 Z08	-	160	8	40	63	2.7	

Cooling mounting screw is optional / See Page "526" for cooling mounting screws.
İçten su vermeli montaj vidaları opsiyoneldir. / Bkz. Sayfa "526" İçten su vermeli montaj vidaları için.

Size Designation	Master Insert*	Spare Parts		
		Screw	Torx Key	Screw Torque Value N·m
D40 - D63	SOMT 1004..	SSV M4x9x5-9528	STK-T15-9910	3,9
D50 - D160	SOMT 1405..	SSV M5x13-9519	STK-T20-9911	5,5

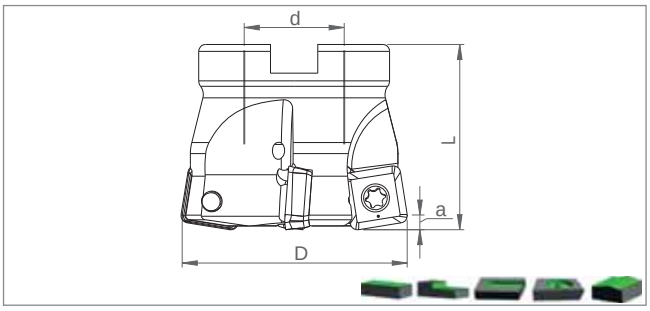

Ordering Code	Item Designation	Dimensions (mm)						Master Insert**
	HTK SOMT 1205..		*D*	*Z*	*d*	*L*	*a*	
SM46795	HTK SOMT12 D50 A22 Z04-H	✓	50	4	22	40	1.5	SOMT 1205..
SM46801	HTK SOMT12 D63 A22 Z05-H	✓	63	5	22	40	1.5	

Size Designation	Master Insert**	Spare Parts		
		Screw	Torx Key	Screw Torque Value N·m
D50 - D63	SOMT 1205..	SSV M4x12-9515	STK-T15-9910	3,9

*Suitable Insert brand is KYCR
**Suitable Insert brand is ISC

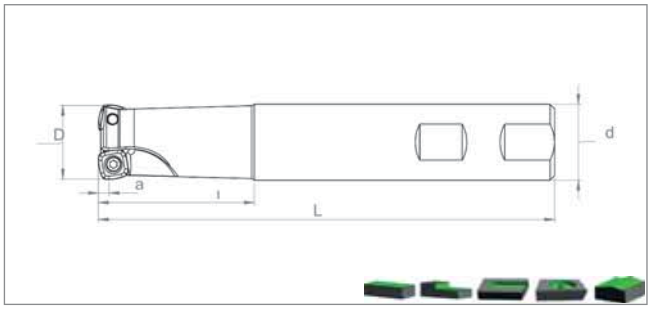

Ordering Code	Item Designation	Dimensions (mm)							Master Insert*
	HST ZDCW 09T3..		*D*	*d*	*Z*	*L*	*l*	*a*	
SM44241	HST ZD09 D25 W25 L150 Z02-H	✓	25	25	2	150	40	1.3	ZDCW 09T3..
SM44258	HST ZD09 D32 W32 L150 Z03-H	✓	32	32	3	150	40	1.3	

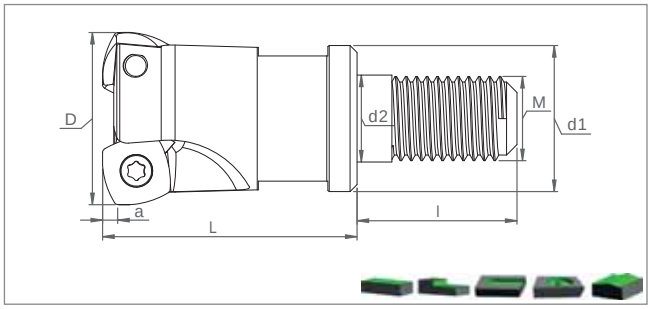

Ordering Code	Item Designation	Dimensions (mm)									Master Insert*
	MHT ZDCW 09T3..		*D*	*Z*	*d1*	*d2*	*L*	*l*	*M*	*a*	
SM45583	MHT ZD09 D25 M12 L35 Z02-H	✓	25	2	21	12.5	35	23	12	1.3	ZDCW 09T3..
SM45590	MHT ZD09 D32 M16 L43 Z03-H	✓	32	3	29	17	43	23	16	1.3	
SM45606	MHT ZD09 D35 M16 L43 Z03-H	✓	35	3	29	17	43	23	16	1.3	

Size Designation	Master Insert*	Spare Parts		
		Screw	Torx Key	Screw Torque Value
				N·m
D25 - D35	ZDCW 09T3..	SSV M3x8-9508	STK-T08-9908	1,9

*Suitable Insert brand is PRMT

SMOXH® CUTTING TOOLS
Kalitenin Yükselen Gücü

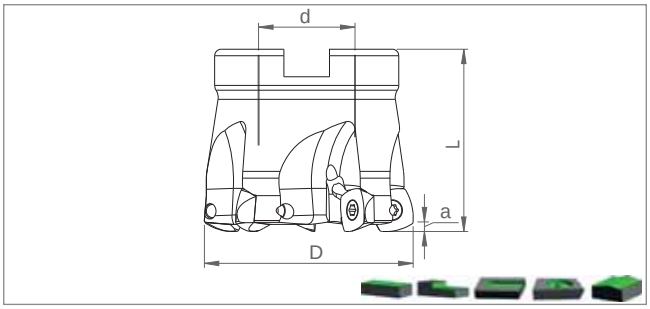

Ordering Code	Item Designation	Dimensions (mm)						Master Insert*
	HTK ZDCW 09T3.. / ZDEW 1204..		*D*	*Z*	*d*	*L*	*a*	
SM43978	HTK ZD09 D40 A16 Z04-H	✓	40	4	16	40	1.3	ZDCW 09T3..
SM44234	HTK ZD09 D50 A22 Z05-H	✓	50	5	22	40	1.3	
SM43992	HTK ZD12 D50 A22 Z04-H	✓	50	4	22	40	1.6	ZDCW 1204..
SM44005	HTK ZD12 D63 A22 Z05-H	✓	63	5	22	40	1.6	

Cooling mounting screw is optional / See Page "526" for cooling mounting screws.
İçten su vermeli montaj vidaları opsiyoneldir. / Bkz. Sayfa "526" İçten su vermeli montaj vidaları için.

Size Designation	Master Insert*	Spare Parts		
		Screw	Torx Key	Screw Torque Value N·m
D40 - D50	ZDCW 09T3..	SSV M3x8-9508	STK-T08-9908	1,9
D50 - D63	ZDEW 1204..	SSV M4x10-9514	STK-T15-9910	3,9

*Suitable Insert brand is PRMT

HIGH FEED MILLING TOOLS

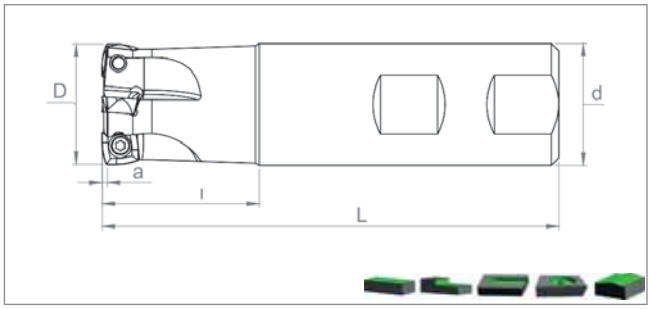

Ordering Code	Item Designation	Dimensions (mm)							Master Insert*
	HST SPKT 08T3..		*D*	*d*	*Z*	*L*	*l*	*a*	
SM36031	HST SPKT08 D20 W20 L150 Z02-H	✓	20	20	2	150	40	1.5	SPKT 08T3..
SM36048	HST SPKT08 D25 W25 L150 Z03-H	✓	25	25	3	150	40	1.5	
SM36055	HST SPKT08 D32 W32 L150 Z04-H	✓	32	32	4	150	40	1.5	

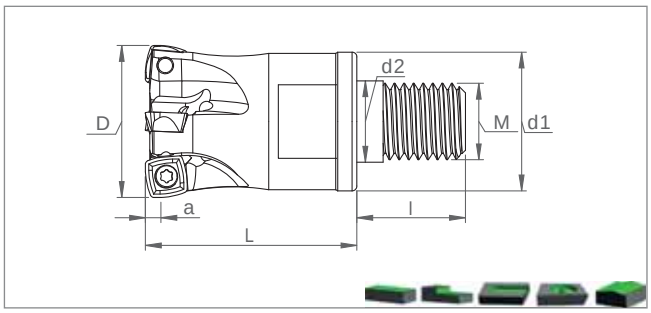

Ordering Code	Item Designation	Dimensions (mm)									Master Insert*
	MHT SPKT 08T3..		*D*	*Z*	*d1*	*d2*	*L*	*l*	*M*	*a*	
SM26650	MHT SPKT08 D25 M12 L35 Z03-H	✓	25	3	21	12.5	35	23	12	1.5	SPKT 08T3..
SM26643	MHT SPKT08 D32 M16 L43 Z04-H	✓	32	4	29	17	43	23	16	1.5	
SM39070	MHT SPKT08 D35 M16 L43 Z04-H	✓	35	4	29	17	43	23	16	1.5	
SM27923	MHT SPKT08 D42 M16 L43 Z05-H	✓	42	5	29	17	43	23	16	1.5	

Size Designation	Master Insert*	Spare Parts		
		Screw	Torx Key	Screw Torque Value N·m
D20 - D42	SPKT 08T3..	SSV M3x8-9508	STK-T08-9908	1,9

*Suitable Insert brand is PLBT

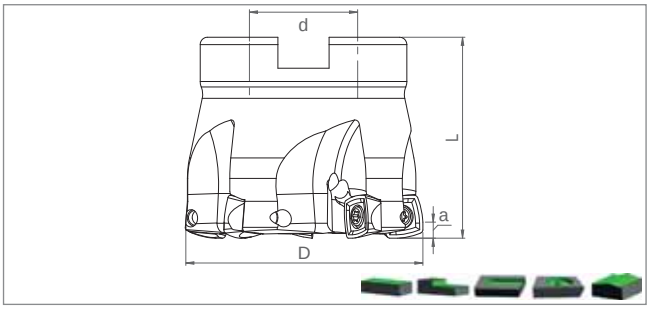

Ordering Code	Item Designation	Dimensions (mm)						Master Insert*
	HTK SPKT 08T3..		*D*	*Z*	*d*	*L*	*a*	
SM36062	HTK SPKT08 D40 A16 Z04-H	✓	40	4	16	40	1.5	SPKT 08T3..
SM33122	HTK SPKT08 D50 A22 Z05-H	✓	50	5	22	40	1.5	
SM33139	HTK SPKT08 D63 A22 Z06-H	✓	63	6	22	40	1.5	

Cooling mounting screw is optional / See Page “526” for cooling mounting screws.
İçten su vermeli montaj vidaları opsiyoneldir. / Bkz. Sayfa “526” İçten su vermeli montaj vidaları için.

Size Designation	Master Insert*	Spare Parts		
		Screw	Torx Key	Screw Torque Value
D40 - D63	SPKT 08T3..	SSV M3x8-9508	STK-T08-9908	1,9 N·m

*Suitable Insert brand is PLBT

HIGH FEED MILLING TOOLS

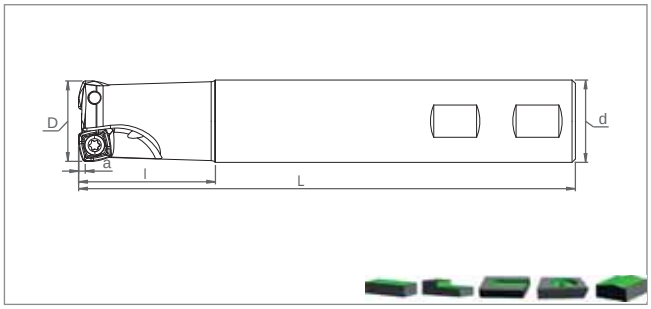

Ordering Code	Item Designation	Dimensions (mm)							Master Insert*
HST XPLT 0603.. / XDLT 0904..			*D*	*d*	*Z*	*L*	*l*	*a*	
SM46412	HST XPLT06 D16 W16 L150 Z02-H	✓	16	16	2	150	40	0.9	XPLT 0603..
SM46429	HST XPLT06 D20 W20 L150 Z03-H	✓	20	20	3	150	40	0.9	
SM46436	HST XPLT06 D25 W25 L150 Z04-H	✓	25	25	4	150	40	0.9	
SM46443	HST XPLT06 D32 W32 L150 Z05-H	✓	32	32	5	150	40	0.9	
SM45354	HST XDLT09 D25 W25 L150 Z02-H	✓	25	25	2	150	40	1.45	XDLT 0904..
SM45361	HST XDLT09 D32 W32 L150 Z03-H	✓	32	32	3	150	40	1.45	
SM45378	HST XDLT09 D40 W32 L150 Z04-H	✓	40	32	4	150	40	1.45	

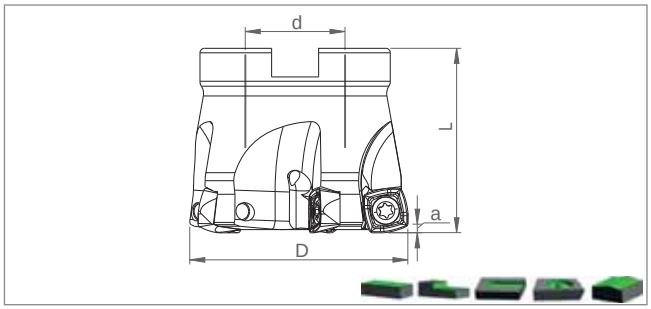

Ordering Code	Item Designation	Dimensions (mm)						Master Insert*
HTK XDLT 0904..			*D*	*Z*	*d*	*L*	*a*	
SM44012	HTK XDLT09 D40 A16 Z04-H	✓	40	4	16	40	1.45	XDLT 0904..
SM44029	HTK XDLT09 D50 A22 Z05-H	✓	50	5	22	40	1.45	
SM44036	HTK XDLT09 D63 A22 Z06-H	✓	63	6	22	40	1.45	

Cooling mounting screw is optional / See Page "526" for cooling mounting screws.
İçten su vermeli montaj vidaları opsiyoneldir. / Bkz. Sayfa "526" İçten su vermeli montaj vidaları için.

Size Designation	Master Insert*	Spare Parts		
		Screw	Torx Key	Screw Torque Value
				N·m
D16	XPLT 0603..	SSV M2.5x6-9505	STK-T08-9908	1,0
D20 - D32		SSV M2.5x7-9506		
D25 - D63	XDLT 0904..	SSV M3.5x8-SC-9513	STK-T10-9909	2,7

*Suitable Insert brand is KNMTL

SMOXH® CUTTING TOOLS
Kalitenin Yükselen Gücü

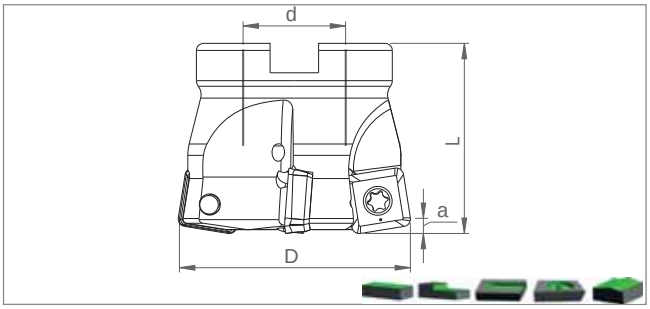

Ordering Code	Item Designation	Dimensions (mm)						Master Insert*
	HTK SQMU 1206..		*D*	*Z*	*d*	*L*	*a*	
SM46818	HTK SQ12 D50 A22 Z04-H	✓	50	4	22	40	2	SQMU 1206..
SM46825	HTK SQ12 D63 A22 Z05-H	✓	63	5	22	40	2	

Cooling mounting screw is optional / See Page "526" for cooling mounting screws.
İçten su vermeli montaj vidaları opsiyoneldir. / Bkz. Sayfa "526" İçten su vermeli montaj vidaları için.

Size Designation	Master Insert*	Spare Parts		
		Screw	Torx Key	Screw Torque Value
				N·m
D50 - D63	SQMU 1206..	SSV M4x12-9515	STK-T15-9910	3,9

*Suitable Insert brand is TNGLY

MODULAR MILL HOLDERS

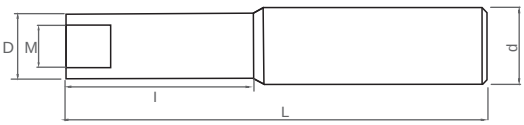

Ordering Code	Item Designation	Dimensions (mm)					
	SMVT MODULAR MILL HOLDERS		*D*	*d*	*M*	*L*	*l*
SM37236	SMVT D15 C16 M08 L120-H	✓	15	16	8	120	40
SM24151	SMVT D18 C20 M10 L120-H	✓	19	20	10	120	60
SM24144	SMVT D18 C20 M10 L170-H	✓	19	20	10	170	90
SM24168	SMVT D24 C25 M12 L160-H	✓	24	25	12	160	80
SM24175	SMVT D24 C25 M12 L200-H	✓	24	25	12	200	100
SM24182	SMVT D24 C25 M12 L250-H	✓	24	25	12	250	150
SM24199	SMVT D31 C32 M16 L160-H	✓	31	32	16	160	80
SM24205	SMVT D31 C32 M16 L200-H	✓	31	32	16	200	100
SM24212	SMVT D31 C32 M16 L250-H	✓	31	32	16	250	150

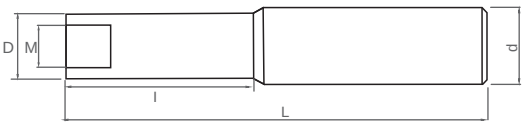

Ordering Code	Item Designation	Dimensions (mm)					
	CMVT CARBIDE MODULAR MILL HOLDERS		*D*	*d*	*M*	*L*	*l*
SM60418	CMVT D16 C16 M08 L100-H	✓	16	16	8	100	-
SM60425	CMVT D16 C16 M08 L150-H	✓	16	16	8	150	-
SM60432	CMVT D16 C16 M08 L200-H	✓	16	16	8	200	-
SM60449	CMVT D20 C20 M10 L100-H	✓	20	20	10	100	-
SM60456	CMVT D20 C20 M10 L150-H	✓	20	20	10	150	-
SM60463	CMVT D20 C20 M10 L200-H	✓	20	20	10	200	-
SM60470	CMVT D25 C25 M12 L150-H	✓	25	25	12	150	-
SM60487	CMVT D25 C25 M12 L200-H	✓	25	25	12	200	-
SM60494	CMVT D32 C32 M16 L200-H	✓	32	32	16	200	-

www.smoxh.com.tr

Slot & Chamfering Tools

- **T Slot** Mills
- **Disc** Mills
- **Chamfering** Tools
- **Dove** Mills
- **Adjustable** Boring Bars

Rising Power of Quality

Insert Assembly Application
Kesici Uç Montaj Uygulaması

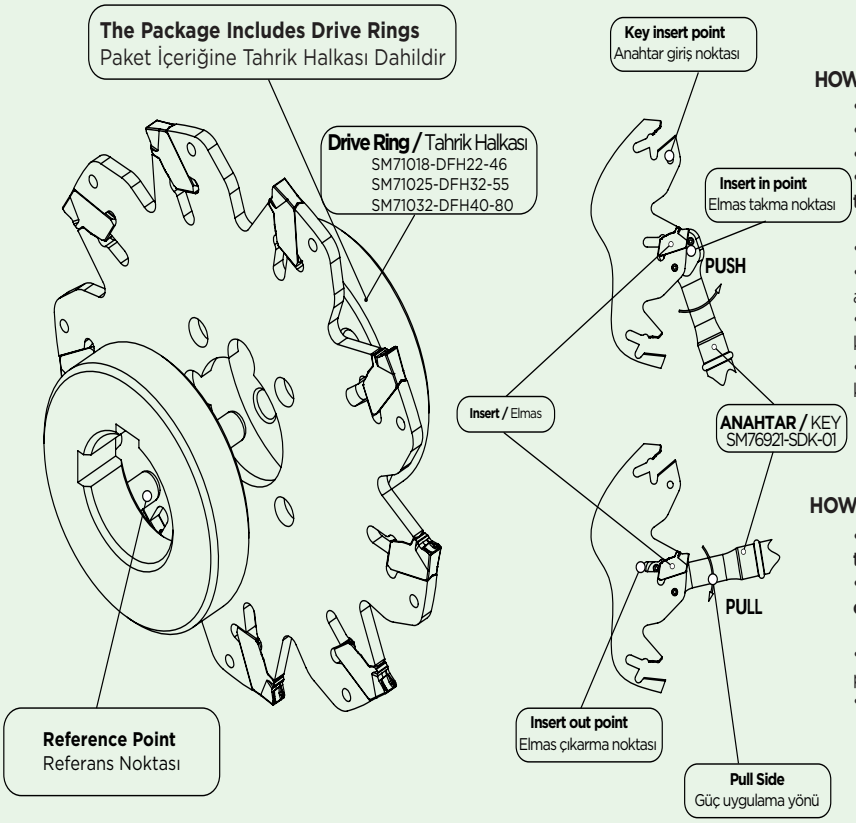

HOW TO CLAMP THE INSERT? / KESİCİ UC NASIL TAKILIR?

- **Put the Insert into the slot.**
- **Insert one of the pins of the switch (on the side SHOWN).**
- **Using the other pin, push the Insert up to the front stop.**
- **Push the Insert until the rear end of the Insert bit touches the milling pocket**

- Kesici Ucu yuva içerisine yerleştirin.
- Anahtarın pimlerinden birini (GÖSTERİLEN tarafta) anahtar destek deliğine yerleştirin.
- Diğer pimi kullanarak elması ön taraf dayama noktasına kadar itin.
- Anahtar uç kısmının arka ucu freze yufasına temas edene kadar döndürün.

HOW TO REMOVE THE INSERT? / KESİCİ UC NASIL ÇIKARILIR?

- **Insert one of the pins of the key into the key support hole and the other pin into the cutting Insert removal hole.**
- **The Insert can be removed by pushing the wrench counterclockwise.**

- Anahtarın pimlerinden birini anahtar destek deliğine, diğer pimi ise Kesici Uç parça çıkarma deliğine yerleştirin.
- Anahtar saat yönünün tersine çekilerek kesici uç çıkarılabilir.

Note: Use SM76921-SDK-01-9913 key for installation

Not:Kurulum için SM76921-SDK-01-9913 anahtarı kulanınız

Advantages of Axial Cutting Disc Milling 2nd Lock
Eksenel Kesim Disk Freze 2. Kilitleme Avantajları

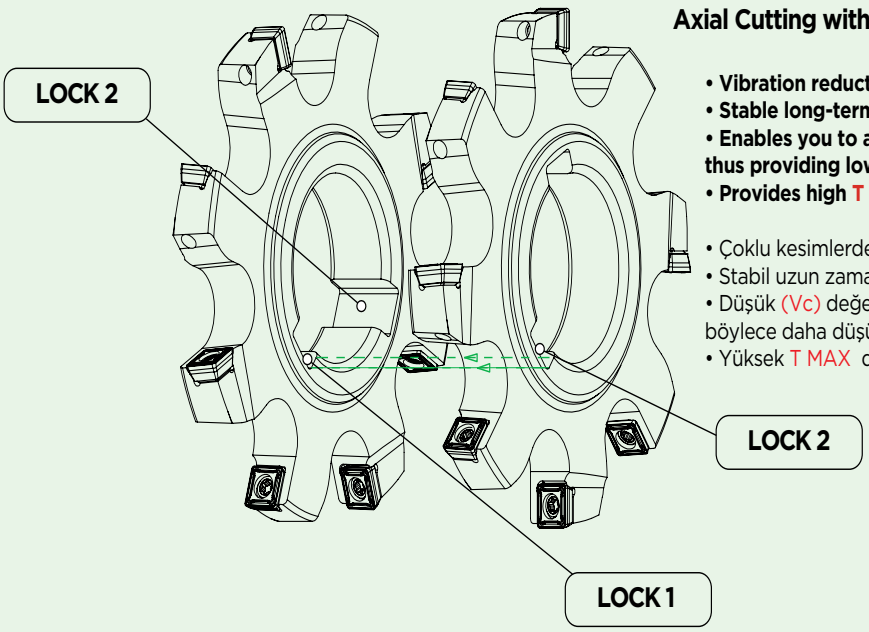

Axial Cutting with 1 and 2 Lock / Kilit 1 ve 2 İle Eksenel Kesim

- **Vibration reduction in multiple cuts.**
- **Stable long-term cutting advantage with easier chip removal.**
- **Enables you to achieve high (fz) values with low (Vc) values, thus providing lower cutting load.**
- **Provides high T MAX values.**

- Çoklu kesimlerde vibrasyon azaltma.
- Stabil uzun zamanlı kesim avantajı daha kolay talaş tahliyesi.
- Düşük (Vc) değerleri ile Yüksek (fz) değerleri elde etmenizi sağlar böylece daha düşük kesim yükü sağlanır
- Yüksek T MAX değerleri sağlar

SMOXH CUTTING TOOLS
Kalitenin Yükselen Gücü

The Package Includes Drive Rings
Paket İçeriğine Tahrik Halkası Dahildir

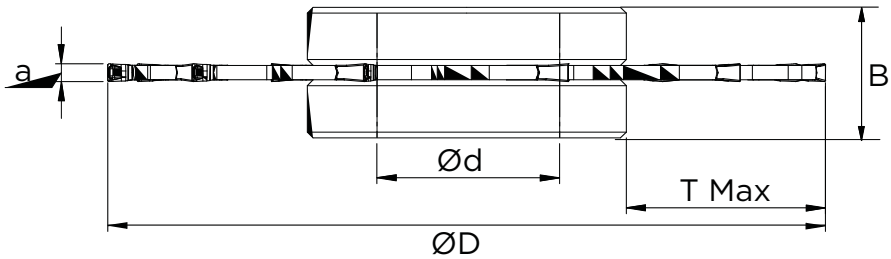

Ordering Code	Item Designation	Dimensions (mm)							Master Insert*
	SSDF SPFN 2C / 3C / 4C DISC MILLING	POWER SERIES	*D*	*a*	*d*	*B*	*Z*	*T Max*	
SM70875	SSDF SP2C D80 d22 Z07-T17	✓	80	2	22	32	7	17	SPFN200
SM70882	SSDF SP2C D100 d22 Z09-T27	✓	100	2	22	32	9	27	
SM70912	SSDF SP3C D80 d22 Z07-T17	✓	80	3	22	33	7	17	SPFN300
SM70929	SSDF SP3C D100 d22 Z09-T27	✓	100	3	22	33	9	27	
SM70936	SSDF SP3C D125 d32 Z11-T35	✓	125	3	32	41	11	35	
SM70943	SSDF SP3C D160 d32 Z14-T52.5	✓	160	3	32	41	14	52.5	
SM70950	SSDF SP3C D200 d40 Z18-T60	✓	200	3	40	43	18	60	
SM70967	SSDF SP4C D80 d22 Z06-T20	✓	80	4	22	34	6	17	SPFN400
SM70974	SSDF SP4C D100 d22 Z08-T30	✓	100	4	22	34	8	30	
SM70981	SSDF SP4C D125 d32 Z10-T35	✓	125	4	32	42	10	35	
SM70998	SSDF SP4C D160 d32 Z13-T52.5	✓	160	4	32	42	13	52.5	
SM71001	SSDF SP4C D200 d40 Z17-T60	✓	200	4	40	44	17	60	

Size Designation	Master Insert*	Spare Parts	
		Drive Ring	Key
		The Package Includes Drive Rings **Paket İçeriğine Tahrik Halkası Dahildir**	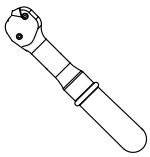
D80 - D100	SPFN200	DFH22-46	SDK-01-9913
D80 - D200	SPFN300	DFH32-55	
D80 - D200	SPFN400	DFH40-80	

*Suitable Insert brand is KRLY

The Package Includes Drive Rings
Paket İçeriğine Tahrik Halkası Dahildir

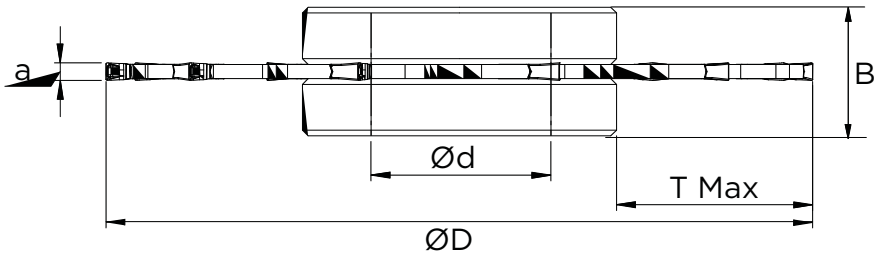

Ordering Code	Item Designation	Dimensions (mm)							Master Insert*
	SSDF 151.2 2C / 3C / 4C DISC MILLING	POWER SERIES	*D*	*a*	*d*	*B*	*Z*	*T Max*	
SM79212	SSDF 151.2 2C D80 d22 Z07-T17	✓	80	2	22	32	7	17	151.2-2C
SM79229	SSDF 151.2 2C D100 d22 Z09-T27	✓	100	2	22	32	9	27	
SM79236	SSDF 151.2 3C D80 d22 Z07-T17	✓	80	3	22	33	7	17	151.2-3C
SM79243	SSDF 151.2 3C D100 d22 Z09-T27	✓	100	3	22	33	9	27	
SM79250	SSDF 151.2 3C D125 d32 Z11-T35	✓	125	3	32	41	11	35	
SM79267	SSDF 151.2 3C D160 d32 Z14-T52.5	✓	160	3	32	41	14	52.5	
SM79274	SSDF 151.2 3C D200 d40 Z18-T60	✓	200	3	40	43	18	60	
SM79281	SSDF 151.2 4C D80 d22 Z06-T20	✓	80	4	22	34	6	17	151.2-4C
SM79298	SSDF 151.2 4C D100 d22 Z08-T30	✓	100	4	22	34	8	30	
SM79304	SSDF 151.2 4C D125 d32 Z10-T35	✓	125	4	32	42	10	35	
SM79311	SSDF 151.2 4C D160 d32 Z13-T52.5	✓	160	4	32	42	13	52.5	
SM79328	SSDF 151.2 4C D200 d40 Z17-T60	✓	200	4	40	44	17	60	

Size Designation	Master Insert*	Spare Parts	
		Drive Ring	Key
		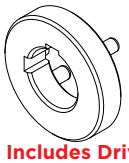 **The Package Includes Drive Rings** **Paket İçeriğine Tahrik Halkası Dahildir**	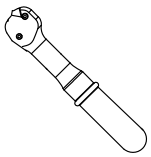
D80 - D100	151.2-2C	DFH22-46	SDK-01-9913
D80 - D200	151.2-3C	DFH32-55	
D80 - D200	151.2-4C	DFH40-80	

*Suitable Insert brand is SNDVK

SMOXH CUTTING TOOLS
Kalitenin Yükselen Gücü

The Package Includes Drive Rings
Paket İçeriğine Tahrik Halkası Dahildir

Ordering Code	Item Designation	Dimensions (mm)							Master Insert*
	SSDF SM 2C / 3C / 4C DISC MILLING	POWER SERIES	*D*	*a*	*d*	*B*	*Z*	*T Max*	
SM79335	SSDF SM2C D80 d22 Z07-T17	✓	80	2	22	32	7	17	SM200
SM79342	SSDF SM2C D100 d22 Z09-T27	✓	100	2	22	32	9	27	
SM79359	SSDF SM3C D80 d22 Z07-T17	✓	80	3	22	33	7	17	SM300
SM79366	SSDF SM3C D100 d22 Z09-T27	✓	100	3	22	33	9	27	
SM79373	SSDF SM3C D125 d32 Z11-T35	✓	125	3	32	41	11	35	
SM79380	SSDF SM3C D160 d32 Z14-T52.5	✓	160	3	32	41	14	52.5	
SM79397	SSDF SM3C D200 d40 Z18-T60	✓	200	3	40	43	18	60	
SM79403	SSDF SM4C D80 d22 Z06-T20	✓	80	4	22	34	6	17	SM400
SM79410	SSDF SM4C D100 d22 Z08-T30	✓	100	4	22	34	8	30	
SM79427	SSDF SM4C D125 d32 Z10-T35	✓	125	4	32	42	10	35	
SM79434	SSDF SM4C D160 d32 Z13-T52.5	✓	160	4	32	42	13	52.5	
SM79441	SSDF SM4C D200 d40 Z17-T60	✓	200	4	40	44	17	60	

Size Designation	Master Insert*	Spare Parts	
		Drive Ring	Key
		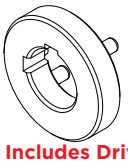 **The Package Includes Drive Rings** **Paket İçeriğine Tahrik Halkası Dahildir**	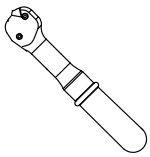
D80 - D100	SM200	DFH22-46	SDK-01-9913
D80 - D200	SM300	DFH32-55	
D80 - D200	SM400	DFH40-80	

*Suitable Insert brand is SMOXH

Advantages of Axial Cutting Disc Milling 2nd Lock
Eksenel Kesim Disk Freze 2. Kilitleme Avantajları

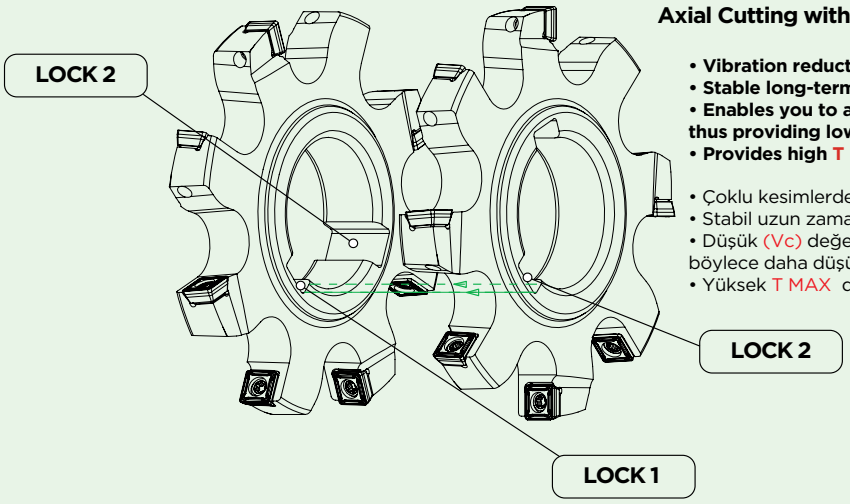

Axial Cutting with 1 and 2 Lock / Kilit 1 ve 2 İle Eksenel Kesim

- **Vibration reduction in multiple cuts.**
- **Stable long-term cutting advantage with easier chip removal.**
- **Enables you to achieve high (fz) values with low (Vc) values, thus providing lower cutting load.**
- **Provides high T MAX values.**

- Çoklu kesimlerde vibrasyon azaltma.
- Stabil uzun zamanlı kesim avantajı daha kolay talaş tahliyesi.
- Düşük (Vc) değerleri ile Yüksek (fz) değerleri elde etmenizi sağlar böylece daha düşük kesim yükü sağlanır
- Yüksek T MAX değerleri sağlar

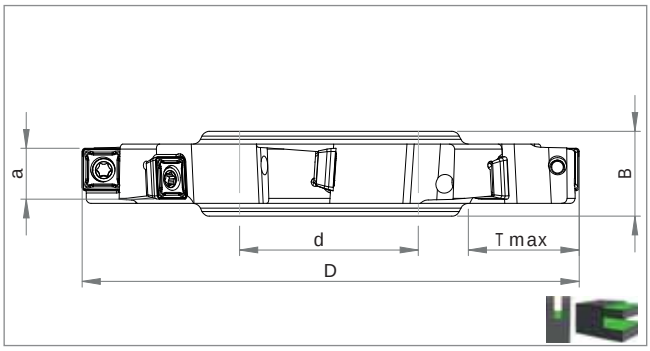

Ordering Code	Item Designation	Dimensions (mm)							Master Insert*
	BSDF SPMG 0502.. / 0602 DISC MILLING	POWER SERIES	*D*	*a*	*d*	*B*	*Z*	*T max*	
SM77669	BSDF SP05 D60x6 d22 Z08 T14	✓	60	6	22	10	8	14	SPMG 0502..
SM77454	BSDF SP05 D80x6 d22 Z10 T17	✓	60	6	22	10	10	17	
SM77461	BSDF SP05 D100x6 d32 Z12 T25	✓	100	6	32	10	12	25	
SM77478	BSDF SP05 D125x6 d40 Z14 T35	✓	125	6	40	10	14	35	
SM77485	BSDF SP05 D160x6 d40 Z18 T52	✓	160	6	40	10	18	52	
SM77492	BSDF SP06 D60x7 d22 Z08 T14	✓	60	7	22	11	8	14	SPMG 0602..
SM77508	BSDF SP06 D80x7 d22 Z10 T19	✓	80	7	22	11	10	19	
SM77515	BSDF SP06 D100x7 d32 Z12 T22.5	✓	100	7	32	11	12	22.5	
SM77522	BSDF SP06 D125x7 d40 Z14 T29	✓	125	7	40	11	14	29	
SM77539	BSDF SP06 D160x7 d40 Z16 T47.5	✓	160	7	40	11	16	47.5	

Size Designation	Master Insert*	Spare Parts		
		Screw	Torx Key	Screw Torque Value
				N·m
D60 - D160	SPMG 050204	SSV M2x5-9502	STK-T06-9906	0,4
D60 - D160	SPMG 060204	SSV M2.2x5-9503		0,65

*Suitable Insert brand is TGTC

SMOXH CUTTING TOOLS
Kalitenin Yükselen Gücü

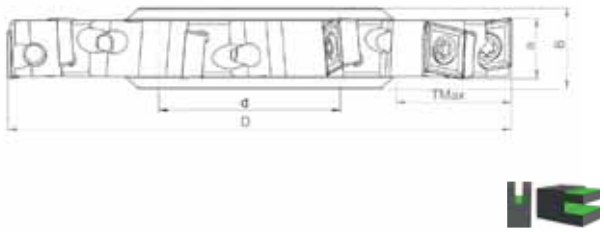

Ordering Code	Item Designation	Dimensions (mm)							Master Insert**
	BSDF CC..0602.. / 09T3.. / 1204.. DISC MILLING	POWER SERIES	*D*	*a*	*d*	*B*	*Z*	*T max*	
SM15395	BSDF CC06 D60x8 d22 Z08 T14	✓	60	8	22	12	8	14	CC.. 0602..
SM15234	BSDF CC06 D60x10 d22 Z08 T14	✓	60	10	22	14	8	14	
SM15241	BSDF CC06 D80x8 d27 Z10 T19	✓	80	8	27	12	10	19	
SM15258	BSDF CC06 D80x10 d27 Z10 T19	✓	80	10	27	14	10	19	
SM15289	BSDF CC06 D100x8 d32 Z12 T22.5	✓	100	8	32	12	12	22.5	
SM15296	BSDF CC06 D100x10 d32 Z12 T22.5	✓	100	10	32	14	12	22.5	
SM15326	BSDF CC06 D125x8 d40 Z14 T29	✓	125	8	40	12	14	29	
SM15333	BSDF CC06 D125x10 d40 Z14 T29	✓	125	10	40	14	14	29	
SM15388	BSDF CC06 D160x10 d40 Z16 T47.5	✓	160	10	40	14	16	47.5	
SM50136	BSDF CC06 D200x10 d40 Z18 T70	✓	200	10	40	14	18	70	
SM15265	BSDF CC09 D80x12 d27 Z08 T17.5	✓	80	12	27	16	8	17.5	CC.. 09T3..
SM15272	BSDF CC09 D80x14 d27 Z08 T17.5	✓	80	14	27	18	8	17.5	
SM15302	BSDF CC09 D100x12 d32 Z10 T22.5	✓	100	12	32	16	10	22.5	
SM15319	BSDF CC09 D100x14 d32 Z10 T22.5	✓	100	14	32	18	10	22.5	
SM15340	BSDF CC09 D125x12 d40 Z12 T29	✓	125	12	40	16	12	29	
SM15357	BSDF CC09 D125x14 d40 Z12 T29	✓	125	14	40	18	12	29	
SM15371	BSDF CC09 D160x12 d40 Z14 T45	✓	160	12	40	16	14	45	
SM15364	BSDF CC09 D160x14 d40 Z14 T45	✓	160	14	40	18	14	45	
SM50143	BSDF CC09 D200x12 d40 Z16 T70	✓	200	12	40	16	16	70	
SM50150	BSDF CC09 D200x14 d40 Z16 T70	✓	200	14	40	18	16	70	
SM50167	BSDF CC12 D200x16 d40 Z12 T70	✓	200	16	40	20	12	70	CC.. 1204..
SM50174	BSDF CC12 D200x18 d40 Z12 T70	✓	200	18	40	22	12	70	

Size Designation	Master Insert*	Spare Parts		
		Screw	Torx Key	Screw Torque Value N·m
D60 - D200	CC.. 0602..	SSV M2.5x7-9506	STK-T08-9908	1,0
D80 - D200	CC.. 09T3..	SSV M3.5x10-9511	STK-T15-9910	2,7
D200	CC.. 1204..	SSV M5x13-9519	STK-T20-9911	3,9

*Suitable Insert brand is ISO

T SLOT MILLS

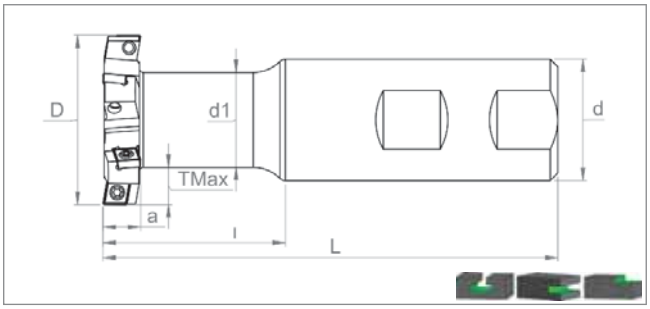

Ordering Code	Item Designation	Dimensions (mm)								Master Insert*
	TF90 CC..0602.. / 09T3.. / 1204.. T SLOT MILLS	*D*	*d*	*d1*	*L*	*l*	*Z*	*a*	*T max*	
SM14954	TF90 CC06 D17x8 W16 L100 Z02 T3.5	17	16	10	100	25	2	8	3.5	CC.. 0602..
SM15128	TF90 CC06 D20x9 W16 L120 Z02 T4	20	16	10	120	25	2	9	4	
SM58453	TF90 CC06 D21x8 W20 L120 Z04 T3.5	21	20	14	120	40	4	8	3.5	
SM01866	TF90 CC06 D22X8 W20 L120 Z04 T4	22	20	14	120	40	4	8	4	
SM01873	TF90 CC06 D22X10 W20 L120 Z04 T4	22	20	14	120	40	4	10	4	
SM14961	TF90 CC06 D23x10 W20 L120 Z04 T3.5	23	20	16	120	40	4	10	3.5	
SM14978	TF90 CC06 D25x10 W20 L120 Z04 T4.5	25	20	16	120	40	4	10	4.5	
SM22416	TF90 CC06 D26x11 W20 L120 Z04 T5	26	20	16	120	40	4	11	5	
SM14985	TF90 CC06 D30x12 W25 L120 Z04 T6	30	25	18	120	45	4	12	6	
SM14992	TF90 CC06 D32x12 W25 L120 Z04 T6	32	25	20	120	45	4	12	6	
SM15005	TF90 CC06 D35x12 W25 L120 Z04 T7.5	35	25	20	120	45	4	12	7.5	
SM15012	TF90 CC06 D40x12 W25 L120 Z06 T9	40	25	22	120	40	6	12	9	
SM14947	TF90 CC06 D42x12 W25 L120 Z06 T10	42	25	22	120	45	6	12	10	
SM15043	TF90 CC06 D45x08 W32 L120 Z06 T10	45	32	25	120	45	6	8	10	
SM15050	TF90 CC06 D45x10 W32 L120 Z06 T10	45	32	25	120	45	6	10	10	
SM15067	TF90 CC06 D50X08 W32 L120 Z06 T12.5	50	32	25	120	45	6	8	12.5	
SM15074	TF90 CC06 D50X10 W32 L120 Z06 T12.5	50	32	25	120	45	6	10	12.5	
SM15081	TF90 CC06 D55x08 W32 L120 Z08 T15	55	32	25	120	45	8	8	15	
SM15098	TF90 CC06 D55x10 W32 L120 Z08 T15	55	32	25	120	45	8	10	15	
SM15104	TF90 CC06 D60x08 W32 L120 Z08 T17.5	60	32	25	120	45	8	8	17.5	
SM15111	TF90 CC06 D60x10 W32 L120 Z08 T17.5	60	32	25	120	45	8	10	17.5	
SM24090	TF90 CC09 D35x14 W25 L120 Z04 T5	35	25	25	120	45	4	14	5	CC.. 09T3..
SM76044	**TF90 CC09 D38x16 W32 L120 Z04 T11**	**38**	**32**	**16**	**120**	**45**	**4**	**16**	**11**	
SM15029	TF90 CC09 D42x14 W25 L120 Z04 T11	42	25	20	120	45	4	14	11	
SM15036	TF90 CC09 D45x14 W32 L120 Z04 T10	45	32	25	120	45	4	14	10	
SM76051	**TF90 CC09 D47x17 W32 L120 Z04 T13.5**	**47**	**32**	**20**	**100**	**45**	**4**	**17**	**13.5**	
SM15135	TF90 CC12 D47x20 W32 L120 Z04 T11	47	32	25	120	55	4	20	11	CC.. 1204..
SM76068	**TF90 CC12 D50x22 W32 L120 Z04 T12.5**	**50**	**32**	**25**	**100**	**45**	**4**	**22**	**12.5**	
SM76075	**TF90 CC12 D55x22 W32 L120 Z04 T15**	**55**	**32**	**25**	**100**	**45**	**4**	**22**	**15**	

Size Designation	Master Insert*	Spare Parts		
		Screw	Torx Key	Screw Torque Value N·m
D17 - D20	CC.. 0602..	SSV M2.5x6-9505	STK-T08-9908	1,0
D23 - D60		SSV M2.5x7-9506		
D25 - D47	CC.. 09T3..	SSV M3.5x10-9511	STK-T15-9910	2,7
D47 - D55	CC.. 1204..	SSV M5x13-9519	STK-T20-9911	3,9

*Suitable Insert brand is ISO

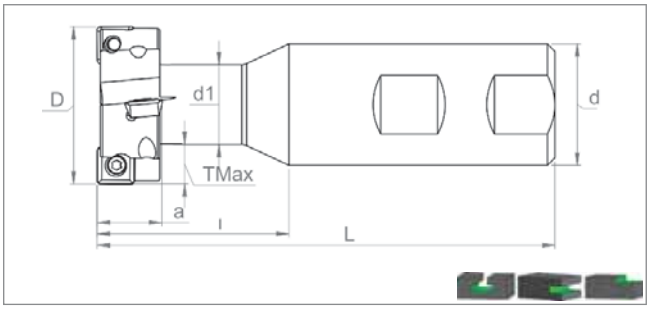

Ordering Code	Item Designation	Dimensions (mm)								Master Insert*
	TF90 SPMG 0502.. / 0904.. / 1104..	*D*	*d*	*d1*	*L*	*l*	*Z*	*a*	*T max*	
SM76082	**TF90 SP05 D22.5x5 W25 L100 Z04 T12**	**22.5**	**25**	**14**	**100**	**40**	**4**	**5**	**12**	SPMG 0502..
SM76099	**TF90 SP05 D25x5 W25 L100 Z04 T9**	**25**	**25**	**16**	**100**	**40**	**4**	**5**	**9**	
SM76105	**TF90 SP05 D30x5 W25 L100 Z04 T10**	**30**	**25**	**18**	**100**	**45**	**4**	**5**	**10**	
SM15210	TF90 SP09 D37x16 W32 L120 Z04 T7.5	37	32	21	120	45	4	16	7.5	SPMG 0904..
SM15227	TF90 SP09 D42x17 W32 L120 Z04 T10.5	42	32	21	120	45	4	17	10.5	
SM15203	TF90 SP11 D47x20 W32 L120 Z04 T11.5	47	32	24	120	50	4	20	11.5	SPMG 1104..

Size Designation	Master Insert*	Spare Parts		
		Screw	Torx Key	Screw Torque Value N·m
D22.5 - D30	SPMG 0502..	SSV M2x5-9502	STK-T06-9906	0,65
D37 - D42	SPMG 0904..	SSV M3.5x10-9511	STK-T15-9910	2,7
D47	SPMG 1104..	SSV M4x10-9514		3,9

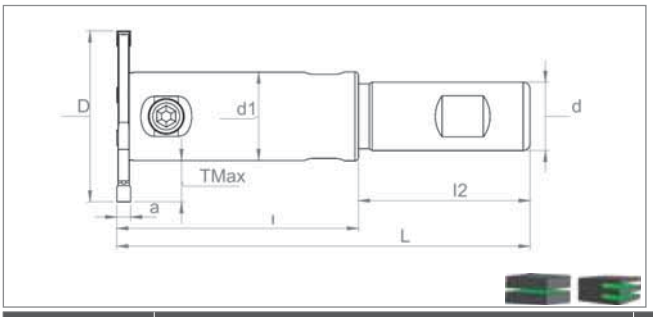

Ordering Code	Item Designation	Dimensions (mm)									Master Insert**
	DKT MGM. 3C / 4C / 5C T SLOT MILLS	*D*	*d*	*d1*	*l*	*l2*	*L*	*a*	*Z*	*T max*	
SM20672	DKT K3C D50 W20 L120 Z02 T12	50	20	26	70	50	120	3	2	12	MGM. 3C
SM20702	DKT K3C D63 W25 L120 Z02 T17	63	25	29	65	55	120	3	2	17	
SM20733	DKT K3C D80 W32 L120 Z02 T20.5	80	32	39	60	60	120	3	2	20.5	
SM20689	DKT K4C D50 W20 L120 Z02 T12	50	20	26	70	50	120	4	2	12	MGM. 4C
SM20719	DKT K4C D63 W25 L120 Z02 T17	63	25	29	65	55	120	4	2	17	
SM20740	DKT K4C D80 W32 L120 Z02 T20.5	80	32	39	60	60	120	4	2	20.5	
SM20696	DKT K5C D50 W20 L120 Z02 T12	50	20	26	70	50	120	5	2	12	MGM. 5C
SM20726	DKT K5C D63 W25 L120 Z02 T17	63	25	29	65	55	120	5	2	17	
SM20757	DKT K5C D80 W32 L120 Z02 T20.5	80	32	39	60	60	120	5	2	20.5	

Size Designation	Master Insert**	Spare Parts	
		Clap Screw	Allen Key
D50	MGM. (3C - 5C)	BKTV-M6x22-9214	SAK-AA5-9904
D63 - D80		BKTV-M8x28-9216	SAK-AA6-9905

*Suitable Insert brand is TGTC
**Suitable Insert brand is KRLY

T SLOT MILLS

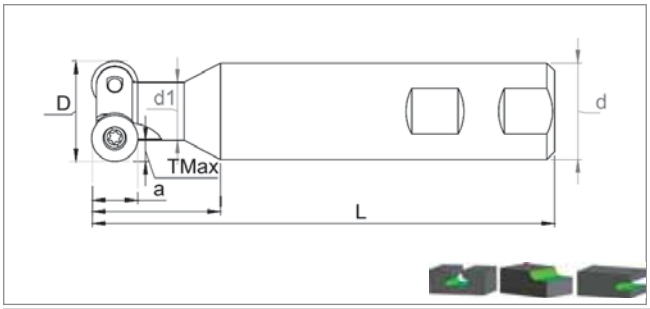

Ordering Code	Item Designation	Dimensions (mm)								Master Insert*
	TF RD..0702 / 1003.. / 12T3.. / 1604..	*D*	*d*	*d1*	*L*	*l*	*Z*	*a*	*T max*	
SM15159	TF RD0702 D17 W16 L120 Z02 T3.5	17	16	10	120	15	2	7	3.5	RD.. 0702..
SM15166	TF RD0702 D25 W16 L120 Z03 T5	25	16	15	120	12	3	7	5	
SM15142	TF RD0702 D35 W25 L120 Z05 T7.5	35	25	20	120	25	5	7	7.5	
SM15173	TF RD1003 D21 W25 L120 Z02 T4.5	21	25	12	120	30	2	10	4.5	RD.. 1003..
SM15180	TF RD12T3 D26 W25 L120 Z02 T5.5	26	25	15	120	30	2	12	5.5	RD.. 12T3..
SM15197	TF RD1604 D34 W32 L120 Z02 T7	34	32	20	120	40	2	16	7	RD.. 1604..

Size Designation	Master Insert*	Spare Parts		
		Screw	Torx Key	Screw Torque Value N·m
D17	RD.. 0702..	SSV M2.5x6-9505	STK-T08-9908	1,0
D25 - D35		SSV M2.5x7-9506		
D21	RD.. 1003..	SSV M3.5x8-SC-9513	STK-T10-9909	2,7
D26	RD.. 12T3..	SSV M3.5x10-9511	STK-T15-9910	
D34	RD.. 1604..	SSV M4x10-9514		3,9

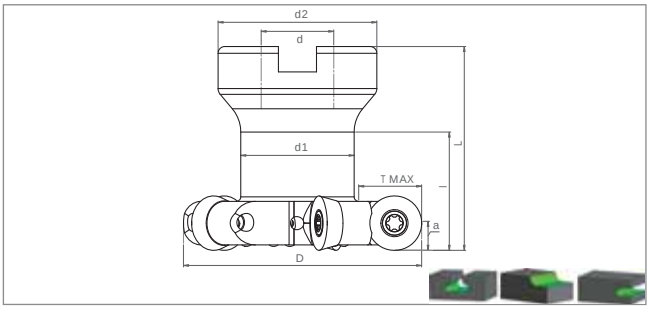

Ordering Code	Item Designation	Dimensions (mm)										Master Insert*
	TSF RD.. 1003.. / 12T3..	💧	*D*	*d*	*d1*	*d2*	*L*	*l*	*Z*	*a*	*T max*	
SM58408	TSF RD1003 D55 A16 Z05-H	✓	55	16	25	35	45	26	5	5	15	RD.. 1003..
SM58415	TSF RD1003 D65 A22 Z06-H	✓	65	22	30	42	50	30	6	5	17.5	
SM58422	TSF RD1003 D80 A22 Z07-H	✓	80	22	35	50	50	28	7	5	22.5	
SM58439	TSF RD1003 D100 A27 Z08-H	✓	100	27	45	60	50	30	8	5	27.5	
SM54318	TSF RD12T3 D55 A16 Z05-H	✓	55	16	25	35	45	26	5	6	15	RD.. 12T3..
SM54325	TSF RD12T3 D65 A22 Z06-H	✓	65	22	30	42	50	30	6	6	17.5	
SM54332	TSF RD12T3 D80 A22 Z07-H	✓	80	22	35	50	50	28	7	6	22.5	
SM54349	TSF RD12T3 D100 A27 Z08-H	✓	100	27	45	60	50	30	8	6	27.5	

Size Designation	Master Insert*	Spare Parts		
		Screw	Torx Key	Screw Torque Value N·m
D55 - D100	RD.. 1003..	SSV M3.5x8-SC-9513	STK-T10-9909	2,7
D55 - D100	RD.. 12T3..	SSV M3.5x10-9511	STK-T15-9910	

*Suitable Insert brand is ISO

CHAMFERING MILLING TOOLS

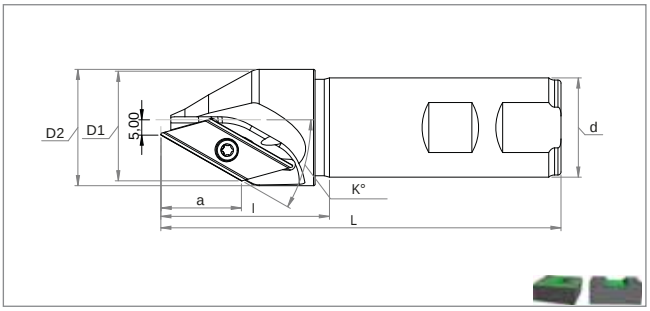

Ordering Code	Item Designation	Dimensions (mm)										Master Insert*
	HLF 30 /45 / 60 XCET 3104 CHAMFERING TOOLS		*K°*	*D*	*D1*	*D2*	*d*	*Z*	*L*	*l*	*a*	
SM71919	HLF30 XC31 5-34 C32 L130 Z01-H	✓	30°	5	34	40	32	1	130	50	25.5	XCET 3104
SM71926	HLF45 XC31 5-46 C32 L130 Z02-H	✓	45°	5	46	56	32	2	130	50	20.5	
SM71933	HLF60 XC31 5-55 C32 L130 Z02-H	✓	60°	5	55	72	32	2	130	50	14.5	

Size Designation	Master Insert*	Spare Parts		
		Screw	Torx Key	Screw Torque Value
D5-34 ~	XCET 3104	SSV M5x13-9519	STK-T20-9911	3,9 N·m

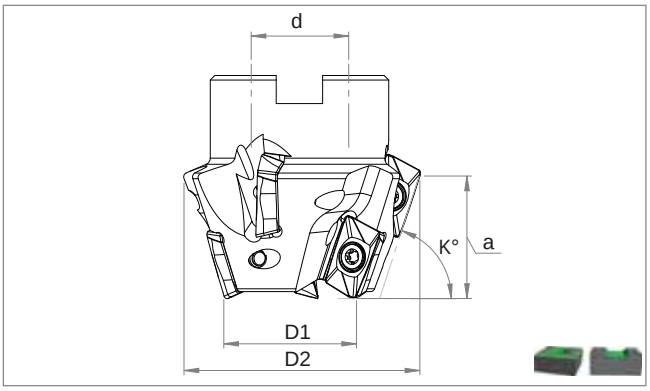

Ordering Code	Item Designation	Dimensions (mm)									Master Insert**
	HFK 15/25/30/45/60/75 APKT 1604.. CHAMFERING TOOLS		*K°*	*D1*	*D2*	*Z*	*Z1**	*d*	*L*	*a*	
SM67141	HFK15 AP16 D90 A27 Z06-H	✓	15°	35	96	6	3	27	50	7	APKT 1604..
SM67158	HFK25 AP16 D87 A27 Z06-H	✓	25°	35	93	6	3	27	50	12	
SM67165	HFK30 AP16 D85 A27 Z06-H	✓	30°	35	90	6	3	27	50	14	
SM67172	HFK45 AP16 D76 A27 Z06-H	✓	45°	35	80	6	3	27	50	20	
SM67189	HFK50 AP16 D72 A27 Z06-H	✓	50°	35	76	6	3	27	50	22	
SM67196	HFK60 AP16 D64 A22 Z06-H	✓	60°	35	67	6	3	22	50	25	
SM67202	HFK75 AP16 D60 A22 Z06-H	✓	75°	35	50	6	3	22	50	28	

Size Designation	Master Insert**	Spare Parts		
		Screw	Torx Key	Screw Torque Value
HFK15 - HFK75	APKT 1604..	SSV M4x9x5-9528	STK-T15-9910	3,0 N·m

*Suitable Insert brand is TNGLY
**Suitable Insert brand is ISO

CHAMFERING MILLING TOOLS

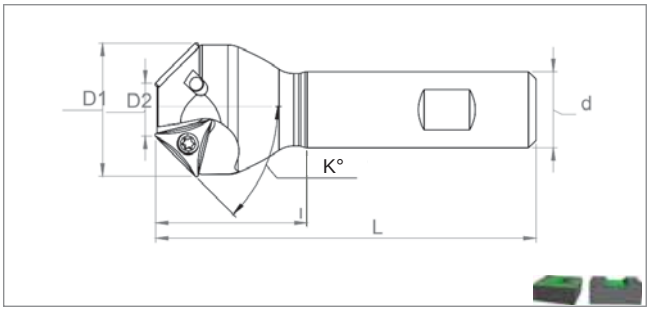

Ordering Code	Item Designation	Dimensions (mm)								Master Insert*
	HF 10/15/17.5/20/22.5/25/30/45 TCM. 1102.. / 16T3.. CHAMFERING TOOLS		*K°*	*D2*	*D1*	*L*	*d*	*Z*	*l*	
SM15401	HF10 TC16 D18-21 W16 L100 Z01	-	10°	18	21	100	16	1	30	TCM. 16T3..
SM15418	HF15 TC16 D17-22 W16 L100 Z01	-	15°	17	22	100	16	1	30	
SM15425	HF17.5 TC16 D17-24 W16 L100 Z01	-	17.5°	17	24	100	16	1	30	
SM15449	HF20 TC16 D12-20 W16 L100 Z01	-	20°	12	20	100	16	1	30	
SM15432	HF20 TC16 D17-26 W16 L100 Z01	-	20°	17	26	100	16	1	30	
SM15456	HF22.5 TC16 D17-28 W20 L100 Z01	-	22.5°	17	28	100	20	1	30	
SM66540	**HF22.5 TC16 D17-28 W16 L100 Z01**	**-**	**22.5°**	**17**	**28**	**100**	**16**	**1**	**30**	
SM15463	HF25 TC16 D17-30 W16 L100 Z01	-	25°	17	30	100	16	1	30	
SM15470	HF30 TC16 D6-20 W16 L100 Z01	-	30°	6	20	100	16	1	30	
SM15487	HF30 TC16 D20-35 W16 L100 Z02	-	30°	20	35	100	16	2	40	
SM15494	HF30 TC16 D30-45 W32 L100 Z03	-	30°	30	45	100	32	3	40	
SM78864	**HF45 TC06 D5-14 W10 L100 Z02**	**-**	**45°**	**5**	**14**	**100**	**10**	**2**	**20**	TCM. 06T1..
SM78871	**HF45L TC06 D5-14 W10 L100 Z02**	**-**	**45°**	**5**	**14**	**100**	**10**	**2**	**20**	
SM50099	HF45 TC11 D4-15 W16 L100 Z01-H	✓	45°	4	15	100	16	1	30	TCM. 1102..
SM15500	HF45 TC11 D4-15 W16 L100 Z01	-	45°	4	15	100	16	1	30	
SM52147	HF45 TC16 D5-26 W16 L100 Z01	-	45°	5	26	100	16	1	30	TCM. 16T3..
SM50105	HF45 TC16 D10-31 W20 L100 Z02-H	✓	45°	10	31	100	20	2	35	
SM15517	HF45 TC16 D10-31 W20 L100 Z02	-	45°	10	31	100	20	2	35	
SM50112	HF45 TC16 D14-35 W20 L100 Z02-H	✓	45°	14	35	100	20	2	40	
SM15524	HF45 TC16 D14-35 W20 L100 Z02	-	45°	14	35	100	20	2	40	
SM50129	HF45 TC16 D22-43 W25 L100 Z03-H	✓	45°	22	43	100	25	3	40	
SM15531	HF45 TC16 D22-43 W25 L100 Z03	-	45°	22	43	100	25	3	40	
SM15548	HF45 TC16 D32-53 W32 L100 Z04	-	45°	32	53	100	32	4	45	
SM51683	HF55 TC16 D16-40 W20 L100 Z03	-	55°	16	40	100	20	3	40	
SM51690	HF62 TC16 D14-40 W20 L100 Z03	-	62°	14	40	100	20	3	40	
SM51706	HF72 TC16 D14-42 W20 L100 Z03	-	72°	14	42	100	20	3	40	

Size Designation	Master Insert*	Spare Parts		
		Screw	Torx Key	Screw Torque Value
				N·m
D5-14	TCM. 06T1..	SSV M2x5-9502	STK-T06-9906	0,4
D4-15	TCM. 1102..	SSV M2.5x7-9506	STK-T08-9908	1,0
D6-20 - ~	TCM. 16T3.	SSV M3.5x10-9511	STK-T15-9910	2,7

*Suitable Insert brand is ISO

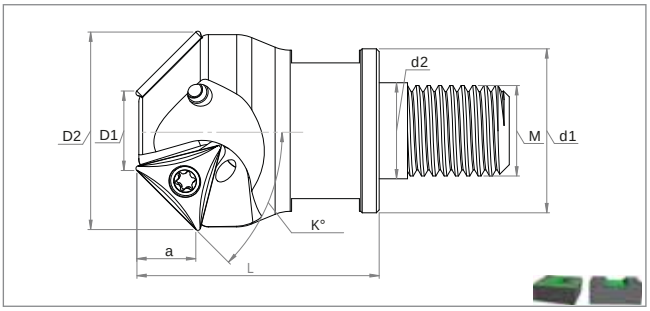

Ordering Code	Item Designation	Dimensions (mm)								Master Insert*
	MHF45 TCM. 1102.. / 16T3.. CHAMFERING TOOLS		*K°*	*D1*	*D2*	*L*	*M*	*Z*	*l*	
SM72084	MHF45 TC11 D4-15 M08 L25 Z01-H	✓	45°	4	15	25	8	1	17	TCM. 1102..
SM72091	MHF45 TC16 D10-31 M12 L35 Z02-H	✓	45°	10	31	35	12	2	19	TCM. 16T3..
SM72107	MHF45 TC16 D14-35 M16 L43 Z02-H	✓	45°	14	35	43	16	2	23	
SM72114	MHF45 TC16 D22-43 M16 L43 Z03-H	✓	45°	22	43	43	16	3	23	

Size Designation	Master Insert*	Spare Parts		
		Screw	Torx Key	Screw Torque Value
				N·m
D4-15	TCM. 1102..	SSV M2.5x7-9506	STK-T08-9908	1,0
D10-31 - ~	TCM. 16T3.	SSV M3.5x10-9511	STK-T15-9910	2,7

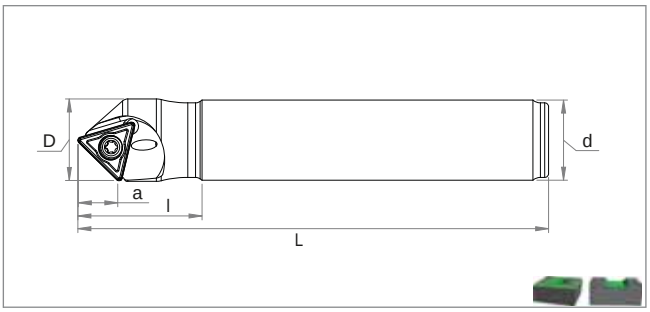

Ordering Code	Item Designation	Dimensions (mm)						Master Insert*
	MFM TWX16R / TWX22R CHAMFERING TOOLS		*D*	*d*	*L*	*l*	*a*	
SM71070	MFM TW16 D21.2 C20 L120-H	✓	21.2	20	120	30	10	TWX16R
SM71087	MFM TW16 D21.2 C20 L150-H	✓	21.2	20	150	40	10	
SM71094	MFM TW22 D28.8 C25 L120-H	✓	28.8	25	120	30	14	TWX22R
SM71100	MFM TW22 D28.8 C25 L150-H	✓	28.8	25	150	40	14	

Size Designation	Master Insert*	Spare Parts		
		Screw	Torx Key	Screw Torque Value
				N·m
D21.2	TWX16R	SSV M4x9-9542	STK-T15-9910	3,9
D28.8	TWX22R			

*Suitable Insert is ISO

ADJUSTABLE BORING BARS

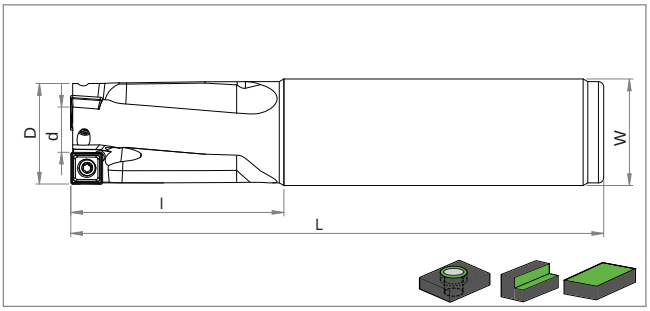

Ordering Code	Item Designation	Dimensions (mm)								Master Insert*
SF BOLT COUNTERSINKING END MILL SPMG 0502.. / 0602..		POWER SERIES	*D*	*d*	*L*	*l*	*W*	*M*	*Z*	
SM77546	SF11 SP06 D4.3x11 W12 L100 Z01-H	✓	11	4.3	100	25	12	M6	1	SPMG 060204
SM77553	SF14 SP06 D6.5x14 W16 L100 Z01-H	✓	14	6.5	100	28	16	M8	1	
SM77560	SF18 SP06 D9x18 W20 L100 Z02-H	✓	18	9	100	36	20	M10	2	
SM77577	SF20 SP06 D11x20 W20 L100 Z03-H	✓	20	11	100	38	20	M12	3	
SM77584	SF23 SP06 D14x23 W25 L100 Z03-H	✓	23	14	100	31	25	M14	3	
SM77591	SF26 SP09 D15x26 W25 L120 Z03-H	✓	26	15	150	42	25	M16	3	SPMG 090408
SM77607	SF29 SP09 D16.5x29 W32 L150 Z03-H	✓	29	16.5	150	58	32	M18	3	
SM77614	SF32 SP09 D18x32 W32 L150 Z03-H	✓	32	18	150	60	32	M20	3	
SM77621	SF35 SP09 D17.5x35 W32 L150 Z03-H	✓	35	17.5	150	62	32	M22	3	
SM77638	SF39 SP09 D21.3x39 W32 L150 Z04-H	✓	39	21.3	150	62	32	M24	4	
SM77645	SF43 SP09 D25x43 W32 L150 Z04-H	✓	43	25	150	62	32	M27	4	
SM77652	SF48 SP09 D29.5x48 W32 L150 Z04-H	✓	48	29.5	150	62	32	M30	4	

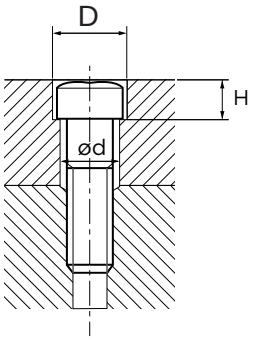

Nominal Screw Size	M6	M8	M10	M12	M14	M16	M18	M20	M22	M24	M27	M30
ØD (mm)	11.0	14.0	17.5	20.0	23.0	26.0	29.0	32.0	35.0	39.0	43.0	48.0
H (mm)	6.5	8.6	10.8	13.0	15.2	17.5	19.5	21.5	23.5	25.5	29.0	32.0
Ød (mm)	6.8	9.0	11.0	14.0	16.0	18.0	20.0	22.0	24.0	26.0	30.0	33.0

Size Designation	Master Insert*	Spare Parts		
		Screw	Torx Key	Screw Torque Value N·m
D4.3x11	SPMG 060204	SSV M2.2x4-9535	STK-T06-9906	0,4
D6.5x14 - D14x23		SSV M2.2x5-9503		0,4
D16x26 - D29.5x48	SPMG 090408	SSV M3.5x10-9511	STK-T15-9910	2,7

*Suitable Insert brand is TGTC

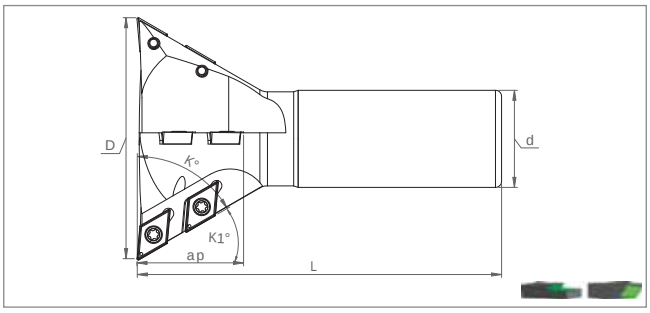

Ordering Code	Item Designation	Dimensions (mm)								Master Insert*
	BKRF 55 / 60 DCM. 11T304. DOVE MILLS	*D*	*Z*	*Z1**	*d*	*L*	*K°*	*K1°*	*ap*	
SM76969	**BKRF60 DC07 D25 W16 L120 Z02**	**25**	**2**	**2**	**16**	**120**	**60**	**30**	**6.5**	DCM. 11T304
SM15845	BKRF60 DC11 D32 W20 L120 Z02	32	2	2	20	120	60	30	10	DCM. 11T304
SM15852	BKRF60 DC11 D40 W25 L120 Z02	40	2	2	25	120	60	30	10	
SM15869	BKRF60 DC11 D50 W25 L120 Z04	50	4	4	25	120	60	30	18	
SM15838	BKRF55 DC11 D60 W25 L120 Z04	60	4	6	25	120	55	35	24	
SM15876	BKRF60 DC11 D80 W32 L120 Z04	80	4	8	32	120	60	30	34	

*Z_1= Effective Cutting Teeth / Z_1=Etkili kesici ağızı

Size Designation	Master Insert*	Spare Parts		
		Screw	Torx Key	Screw Torque Value N·m
D25	DCM. 0702..	SSV M2.5x6-9505	STK-T08-9908	1,0
D32 - D80	DCM. 11T304	SSV M3.5x10-9511	STK-T15-9910	2,7

AVERAGE TOLERANCE TABLE

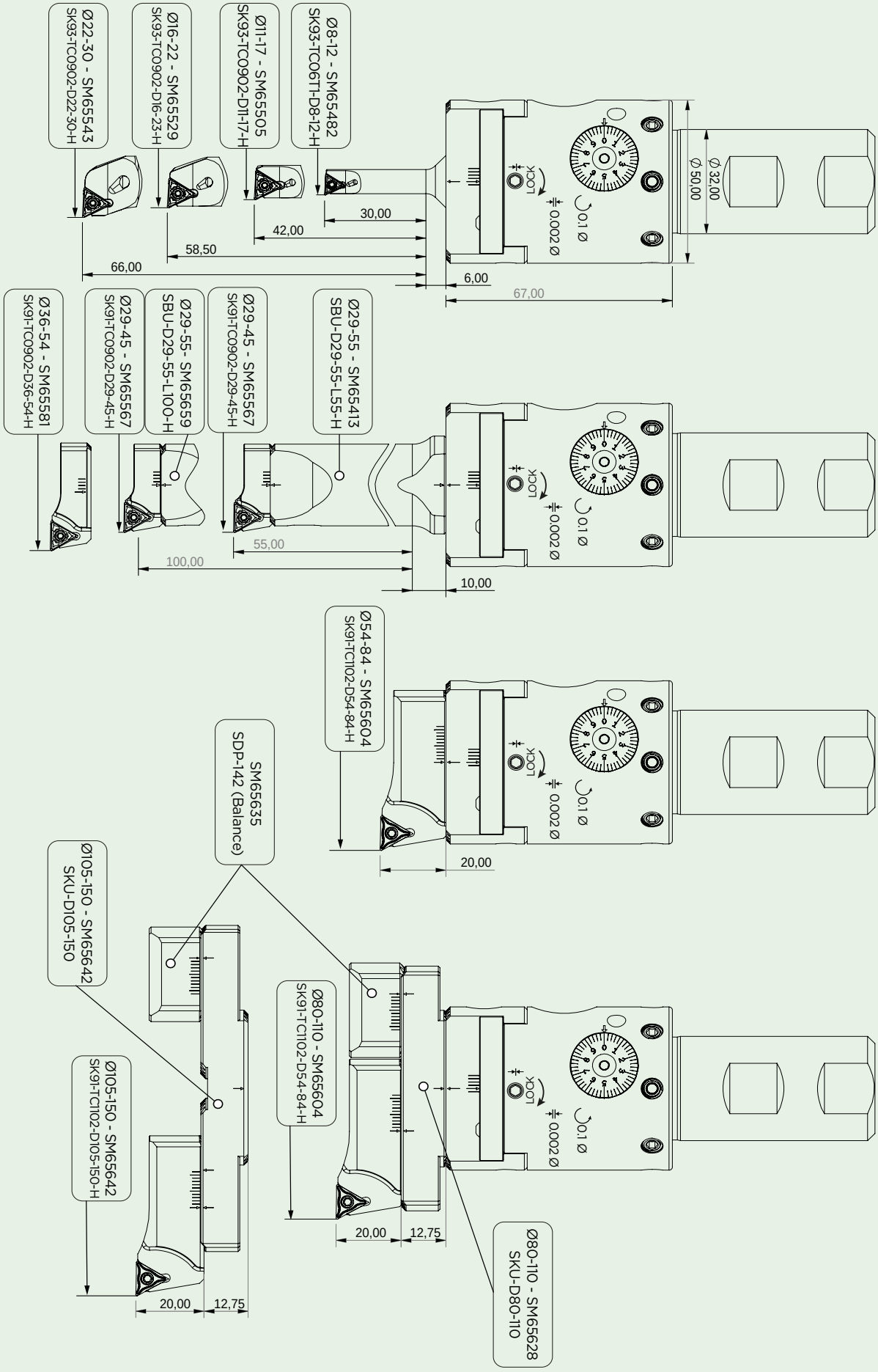

FINISH BORING BAR PARTS

Locked points should not be opened by the user.
Kilitli noktalar kullanıcı tarafından açılmamalıdır.

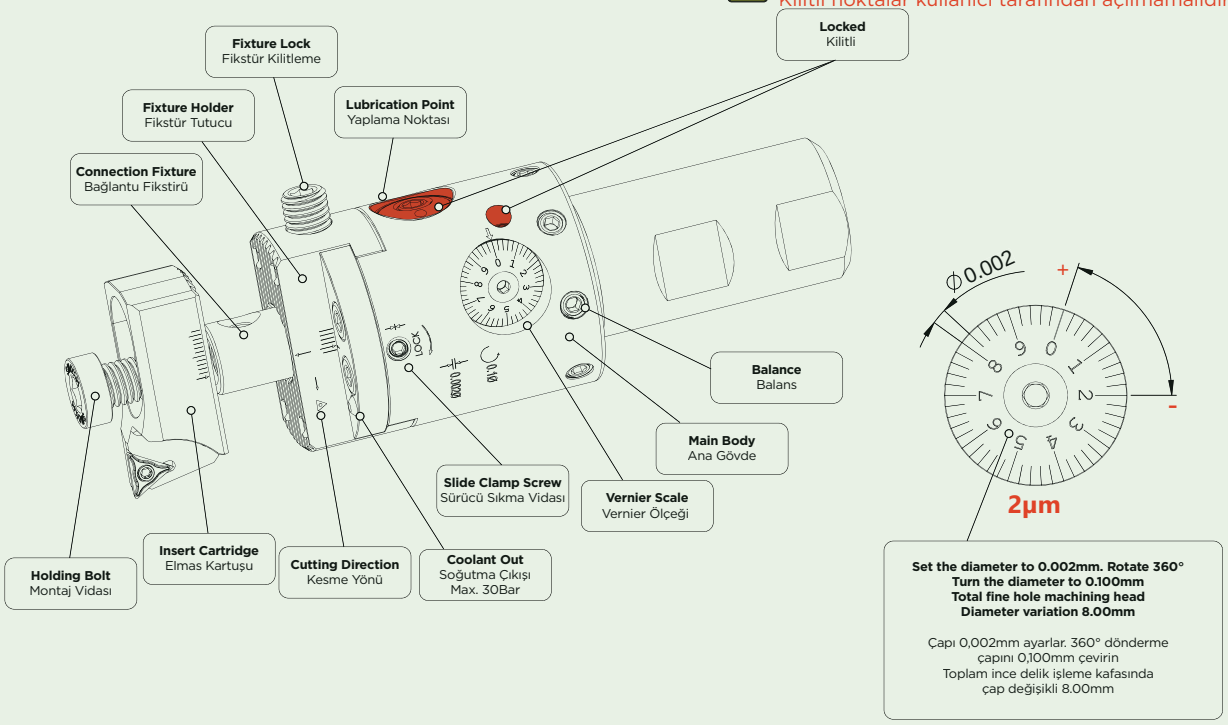

Ordering Code	Item Designation
	SFBK-S01 FINISH BORING BARS KITS
SM74675	SFBK-01-TP/WC-6-150

SET İÇERİĞİ / KIT CONTENTS

Item Designation		kg	Qty Ad.	
SM65666	SFBT S02	1.135	1Ad/Pc	-
SM73456	SK95 WCGT0201-D06-08-H	0.041	1Ad/Pc	WCGT0201..
SM73463	SK95 WCGT0201-D08-12-H	0.047	1Ad/Pc	
SM73470	SK93 TPGX0902-D11-17-H	0.054	1Ad/Pc	TPGX0902..
SM74620	SK93 TPGX0902-D16-23-H	0.098	1Ad/Pc	
SM74637	SK93 TPGX0902-D22-30-H	0.112	1Ad/Pc	
SM74644	SK91 TPGX0902-D29-45-H	0.014	1Ad/Pc	
SM74651	SK91 TPGX0902-D36-54-H	0.021	1Ad/Pc	
SM74668	SK91 TPGX1103-D54-84-H	0.077	1Ad/Pc	TPGX1102..
SM65413	SBU D29-55 L55-H	0.261	1Ad/Pc	-
SM65628	SKU D80-110	0.138	1Ad/Pc	
SM65642	SKU D105-150	0.189	1Ad/Pc	
SM21761	STK-T06-9906	-	1Ad/Pc	
SM80881	STK-T08-HT-9915	-	1Ad/Pc	
SM80898	STK-T15-HT-9916	-	1Ad/Pc	
SM21426	SSV M2.2x5-9503	-	1Ad/Pc	
SM49536	SSV M2.5x5-9504	-	1Ad/Pc	
SM52376	SSV M3x7-9527	-	1Ad/Pc	
SM52222	BKTV M5x18x8-9212	-	5Ad/Pcs	
SM78161	STV M10x1620-9255	-	2Ad/Pcs	
SM21723	SAK-AA4-9903	-	1Ad/Pc	
SM78819	SAK-AA7-9914	-	1Ad/Pc	
SM62474	SIKIŞMA ÖNLEYİCİ YAĞ ANTI-SEIZE LUBRICANT	-	1Ad/Pc	

Ordering Code	Item Designation
	SFBK-S02 FINISH BORING BARS KITS
SM65673	SFBK-02-TC-8-150

SET İÇERİĞİ / KIT CONTENTS

Item Designation		kg	Qty Ad.	
SM65666	SFBT S02	1.135	1Ad/Pc	-
SM65482	SK93 TC06T1-D8-12-H	0.042	1Ad/Pc	TC.06T1..
SM65505	SK93 TC0902-D11-17-H	0.054	1Ad/Pc	TC.0902..
SM65529	SK93 TC0902-D16-23-H	0.098	1Ad/Pc	
SM65543	SK93 TC0902-D22-30-H	0.112	1Ad/Pc	
SM65567	SK91 TC0902-D29-45-H	0.015	1Ad/Pc	
SM65581	SK91 TC0902-D36-54-H	0.020	1Ad/Pc	
SM65604	SK91 TC1102-D54-84-H	0.076	1Ad/Pc	TC.1102..
SM65413	SBU D29-55 L55-H	0.261	1Ad/Pc	-
SM65628	SKU D80-110	0.138	1Ad/Pc	
SM65642	SKU D105-150	0.189	1Ad/Pc	
SM21761	STK-T06-9906	-	1Ad/Pc	
SM80881	STK-T08-HT-9915	-	1Ad/Pc	
SM80898	STK-T15-HT-9916	-	1Ad/Pc	
SM52345	SSV M2x4-9521	-	1Ad/Pc	
SM21426	SSV M2.2x5-9503	-	1Ad/Pc	
SM21402	SSV M2.5x7-9506	-	1Ad/Pc	
SM52222	BKTV M5x18x8-9212	-	5Ad/Pcs	
SM78161	STV M10x1620-9255	-	2Ad/Pcs	
SM21723	SAK-AA4-9903	-	1Ad/Pc	
SM78819	SAK-AA7-9914	-	1Ad/Pc	
SM62474	SIKIŞMA ÖNLEYİCİ YAĞ ANTI-SEIZE LUBRICANT	-	1Ad/Pc	

*Suitable Insert is ISO

SMOXH® CUTTING TOOLS
Kalitenin Yükselen Gücü

Ordering Code	Item Designation
	SFBK-S03 FINISH BORING BARS KITS
SM74729	SFBK-03-CC-9-150

NEW

SET İÇERİĞİ / KIT CONTENTS

Item Designation		kg		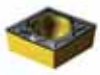
SM65666	SFBT S02	1.135	1 Ad/Pc	-
SM65499	SK90 CC0602-D9-13-H	0.047	1 Ad/Pc	CC.0602..
SM65512	SK90 CC0602-D12-18-H	0.060	1 Ad/Pc	
SM65536	SK90 CC0602-D17-24-H	0.099	1 Ad/Pc	
SM65550	SK90 CC09T3-D23-31-H	0.118	1 Ad/Pc	CC.09T3..
SM65574	SK90 CC0602-D30-46-H	0.014	1 Ad/Pc	CC.0602..
SM65598	SK90 CC0602-D37-55-H	0.021	1 Ad/Pc	
SM65611	SK90 CC09T3-D55-85-H	0.077	1 Ad/Pc	CC.09T3..
SM65413	SBU D29-55 L55-H	0.261	1 Ad/Pc	-
SM65628	SKU D80-110	0.138	1 Ad/Pc	
SM65642	SKU D105-150	0.189	1 Ad/Pc	
SM21761	STK-T06-9906	-	1 Ad/Pc	
SM80881	STK-T08-HT-9915	-	1 Ad/Pc	
SM80898	STK-T15-HT-9916	-	1 Ad/Pc	
SM21402	SSV M2.5x7-9506	-	1 Ad/Pc	
SM27350	SSV M3.5x8-9510	-	1 Ad/Pc	
SM52222	BKTV M5x18x8-9212	-	5 Ad/Pcs	
SM78161	STV M10x1620-9255	-	2 Ad/Pcs	
SM21723	SAK-AA4-9903	-	1 Ad/Pc	
SM78819	SAK-AA7-9914	-	1 Ad/Pc	
SM62474	SIKIŞMA ÖNLEYİCİ YAĞ ANTI-SEIZE LUBRICANT	-	1 Ad/Pc	

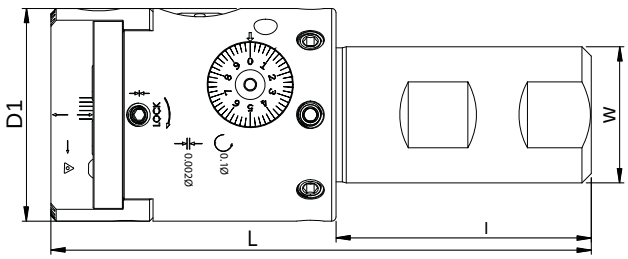

Ordering Code	Item Designation	Dimensions (mm)					
	SFBT-S02 FINE FINISH BODY	*D1*	*D2*	*W*	*L*	*l*	*kg*
SM65666	SFBT-S02	50	-	32	127	60	1.135

ADJUSTABLE BORING BARS

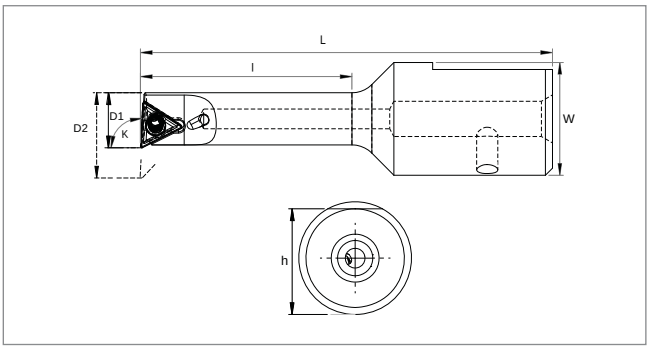

Ordering Code	Item Designation	Dimensions (mm)								Master Insert*
	SK90 CC0602.. / 09T3.. CARTRIDGE	*D1*	*D2*	*W*	*L*	*l*	*h*	*K*	*kg*	
SM65499	SK90 CC0602-D9-13-H	09	13	16	60.5	33	15	90°	0.047	CC.. 0602..
SM65512	SK90 CC0602-D12-18-H	12	18	16	75	48	15	90°	0.060	
SM65536	SK90 CC0602-D17-24-H	17	24	16	85.5	61.5	15	90°	0.099	
SM65550	SK90 CC09T3-D23-31-H	23	31	16	92	69	15	90°	0.118	CC.. 09T3..

Ordering Code	Item Designation	Dimensions (mm)								Master Insert*
	SK93 TC06T1.. / 0902.. CARTRIDGE	*D1*	*D2*	*W*	*L*	*l*	*h*	*K*	*kg*	
SM65482	SK93 TC06T1-D8-12-H	08	12	16	57.5	30	15	93°	0.042	TC.06T1..
SM65505	SK93 TC0902-D11-17-H	11	13	16	69	42	15	93°	0.054	TC.0902..
SM65529	SK93 TC0902-D16-23-H	16	23	16	82	58.5	15	93°	0.098	
SM65543	SK93 TC0902-D22-30-H	22	30	16	89	66	15	93°	0.112	

Ordering Code	Item Designation	Dimensions (mm)								Master Insert*
	SK93/SK95 WCGT0201.. / TPGX0902.. CARTRIDGE	*D1*	*D2*	*W*	*L*	*l*	*h*	*K*	*kg*	
SM73456	SK95 WCGT0201-D6-08-H	06	08	16	47.5	20	15	95°	0.041	WCGT0201..
SM73463	SK95 WCGT0201-D8-12-H	08	12	16	57.5	30	15	95°	0.047	
SM73470	SK93 TPGX0902-D11-17-H	11	17	16	69	42	15	93°	0.054	TPGX0902..
SM74620	SK93 TPGX0902-D16-23-H	16	23	16	82	58.5	15	93°	0.098	
SM74637	SK93 TPGX0902-D22-30-H	22	30	16	89	66	15	93°	0.112	

Size Designation	Master Insert*	Spare Parts		
		Screw	Torx Key	Screw Torque Value N·m
D6-8	WCGT0201..	SSV M2x4-9521	STK-T06-9906	0,4
D8-12				
D9-13	CC.. 0602..	SSV M2.5x5-9504	STK-T08-9908	1,0
D12-18				
D17-24				
D23-31	CC.. 09T3..	SSV M3.5x8-9510	STK-T15-9910	2,7
D8-12	TC.06T1..	SSV M2x4-9521	STK-T06-9906	0,4
D11-17	TC.0902.. TPGX0902..	SSV M2.2x5-9503	STK-T06-9906	0,4
D16-23				
D22-30				

*Suitable Insert is ISO

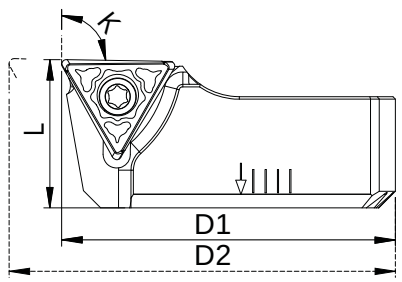

Ordering Code	Item Designation	Dimensions (mm)					Master Insert*
	SK90 CC0602.. / 09T3.. CARTRIDGE	*D1*	*D2*	*L*	*K*	*kg*	
SM65574	SK90 CC0602-D30-46-H	30	46	12	90°	0.014	CC.. 0602..
SM65598	SK90 CC0602-D37-55-H	37	55	12	90°	0.021	
SM65611	SK90 CC09T3-D55-85-H	55	85	20	90°	0.077	CC.. 09T3..

Ordering Code	Item Designation	Dimensions (mm)					Master Insert*
	SK91 TC.0902.. / TC1102.. CARTRIDGE	*D1*	*D2*	*L*	*K*	*kg*	
SM65567	SK91 TC0902-D29-45-H	29	45	12	91°	0.015	TC.0902..
SM65581	SK91 TC0902-D36-54-H	36	54	12	91°	0.020	
SM65604	SK91 TC1102-D54-84-H	54	84	20	91°	0.076	TC.1102..

Ordering Code	Item Designation	Dimensions (mm)					Master Insert*
	SK91 TPGX0902.. / 1102.. CARTRIDGE	*D1*	*D2*	*L*	*K*	*kg*	
SM74644	SK91 TPGX0902-D29-45-H	29	45	12	91°	0.014	TPGX0902..
SM74651	SK91 TPGX0902-D36-54-H	36	54	12	91°	0.021	
SM74668	SK91 TPGX1103-D54-84-H	54	84	20	91°	0.077	TPGX1102..

Size Designation	Master Insert*	Spare Parts		
		Screw	Torx Key	Screw Torque Value N·m
D30-46	CC.. 0602..	SSV M2.5x5-9504	STK-T08-9908	1,0
D37-55				
D55-85	CC.. 09T3..	SSV M3.5x10-9511	STK-T15-9910	2,7
D29-45	TC.0902..	SSV M2.2x5-9503	STK-T06-9906	0,4
D36-54				
D54-84	TC.1102..	SSV M2.5x6-9505	STK-T08-9908	1,0
D29-45	TPGX0902..	SSV M2.5x5-9504	STK-T08-9908	1,0
D36-54				
D54-84	TPGX1103..	SSV M3x7-9527		1,9

*Suitable Insert is ISO

ADJUSTABLE BORING BARS

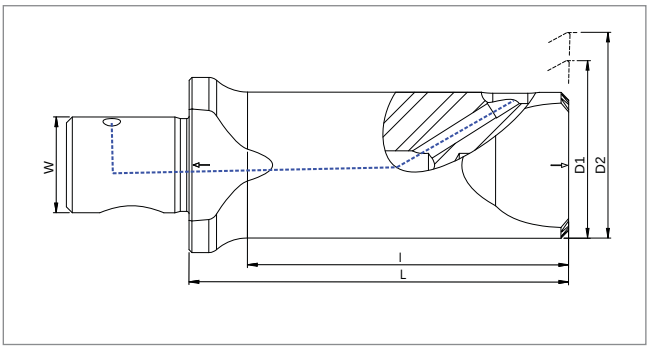

Ordering Code	Item Designation	Dimensions (mm)					
	SBU EXTENSION PIECE	*D1*	*D2*	*W*	*L*	*l*	*kg*
SM65413	SBU D29-55 L55-H	29	55	16	65	55	0.261
SM65659	SBU D29-55 L100-H	29	55	16	110	100	0.427

Size Designation	Spare Parts	
	Bolt	Allen Key
D29-55	BKTV M5x18x8-9212	SAK-AA4-9903

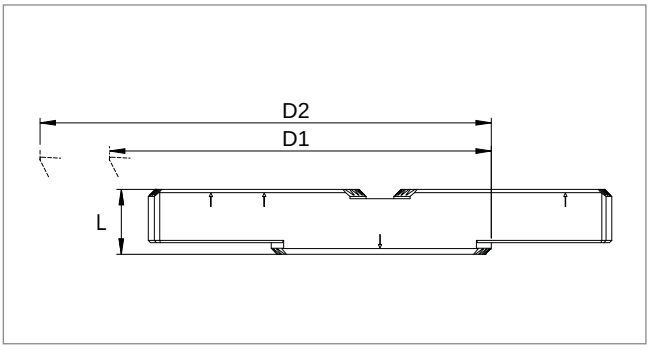

Ordering Code	Item Designation	Dimensions (mm)			
	SKU CARTRIDGE EXTENSION PIECE	*D1*	*D2*	*W*	*kg*
SM65628	SKU D80-110	80	110	12.75	0.138
SM65642	SKU D105-150	105	150	12.75	0.189

Size Designation	Spare Parts	
	Bolt	Allen Key
D80-110	BKTV M5x18x8-9212	SAK-AA4-9903
D105-150	STV M10x1620-9255	SAK-AA7-9914

*Suitable Insert is ISO

SMOXH CUTTING TOOLS
Kalitenin Yükselen Gücü

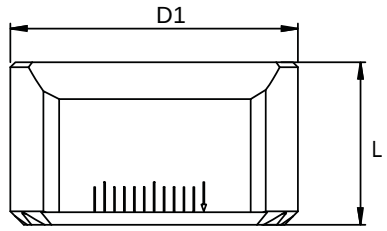

Ordering Code	Item Designation	Dimensions (mm)			
SDP WEIGHT BALANCING PIECE		*D1*	*D2*	*W*	*kg*
SM65635	SDP-142	29	-	16	0,045

Size Designation	Spare Parts	
	Bolt	Allen Key
SDP-142	STV M10x1620-9255	SAK-AA7-9914

*Suitable Insert is ISO

ADJUSTABLE BORING BARS

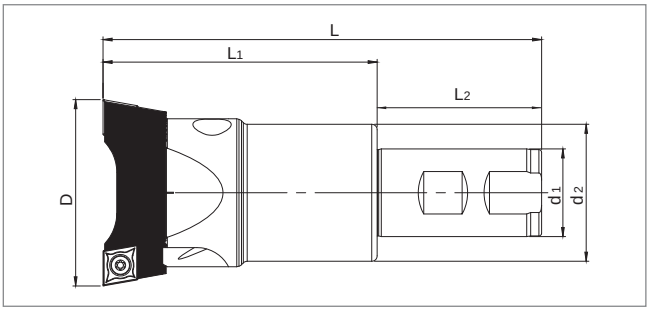

Ordering Code	Item Designation	Dimensions (mm)							Master Insert**
SBT-CC..0602.. / 09T3.. / 1204.. ADJUSTABLE BORING BARS		*D1*	*D2*	*d1*	*d2*	*L*	*L1*	*L2*	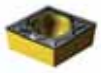
SM15906	SBT-CC06 D20-24 I50 W16 L100	20	24	16	16	100	50	50	CC.. 0602..
SM15937	SBT-CC06 D20-24 I100 W16 L150	20	24	16	16	150	100	50	
SM16019	SBT-CC06 D20-24 I150 W16 L200	20	24	16	16	200	150	50	
SM15913	SBT-CC06 D24-29 I50 W20 L100	24	29	20	22	100	50	50	
SM23598	SBT-CC06 D24-29 I100 W20 L150	24	29	20	22	150	100	50	
SM16026	SBT-CC06 D24-29 I180 W20 L230	24	29	20	22	230	180	50	
SM15920	SBT-CC09 D29-39 I55 W20 L105	29	39	20	25	105	55	50	CC.. 09T3..
SM15968	SBT-CC09 D29-39 I105 W20 L155	29	39	20	25	155	105	50	
SM15890	SBT-CC09 D29-39 I175 W20 L230	29	39	20	25	230	175	55	
SM15944	SBT-CC09 D39-49 I65 W25 L120	39	49	25	32	120	65	55	
SM15975	SBT-CC09 D39-49 I115 W25 L170	39	49	25	32	170	115	55	
SM16057	SBT-CC09 D39-49 I200 W25 L250	39	49	25	32	250	200	55	
SM15951	SBT-CC09 D49-60 I66 W32 L126	49	60	32	40	126	66	60	
SM15883	SBT-CC09 D49-60 I116 W32 L176	49	60	32	40	176	116	60	
SM16071	SBT-CC09 D49-60 I200 W32 L260	49	60	32	40	260	200	60	
SM15982	SBT-CC12 D59-79 I85 W32 L145	59	79	32	50	145	85	60	CC.. 1204..
SM16002	SBT-CC12 D59-79 I135 W32 L195	59	79	32	50	195	135	60	
SM16088	SBT-CC12 D59-79 I220 W32 L280	59	79	32	50	280	220	60	
SM15999	SBT-CC12 D69-89 I85 W32 L145	69	89	32	63	145	85	60	
SM16033	SBT-CC12 D69-89 I135 W32 L195	69	89	32	63	195	135	60	
SM39582	SBT-CC12 D69-89 I220 W32 L290	69	89	32	63	290	220	60	
SM16095	SBT-CC12 D69-89 I220 W40 L290	69	89	40	63	290	220	60	
SM16040	SBT-CC12 D89-130 I105 W32 L175	89	130	32	75	175	105	60	
SM16064	SBT-CC12 D89-130 I165 W32 L225	89	130	32	75	225	165	60	

Size Designation	Master Insert*	Spare Parts					
	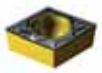	Cartridge	Insert Screw	Insert Torx Key	Screw Torque Value N·m	Cartridge Screw	Adjustment Screw
D20-24	CC.. 0602..	KR2024	SSV M2.5x6-9505	STK-T08-9908	1,0	BKTV M4x15x6-9220	SNSV M3x6-9301
D24-29		KR2429				BKTV M5x18x8-9212	SNSV M4x8-9302
D29-39	CC.. 09T3..	KR2939	SSV M3.5x8-9510	STK-T15-9910	2,7	BKTV M6x20x8-9213	SNSV M4x10-9303
D39-49		KR3949	SSV M3.5x10-9511			BKTV M8x30x11 9217	SNSV M4x12-9304
D49-60		KR4960					SNSV M4x14-9305
D59-79	CC.. 1204..	KR5979	SSV M5x13-9519	STK-T20-9911	5,5		SNSV M5x15-9307
D69-89		KR6989					
D89-130		KR89130					SNSV M5x20-9318

*Suitable Insert is ISO

www.smoxh.com.tr

U-Drills & MultiCut

J

- **U** Drills
- **Multi**Cut
- **Eccentric** Sleeve

Rising Power of Quality

Insert	WCM.030208 ISO	WCM.040208 ISO	WCM.050308 ISO	WCM.06T308 ISO	WCM.080412 ISO
Dimeter Range (mm)	Ø16-19.5	Ø20-23.5	Ø24-29.5	Ø30-44	Ø45-60
Size & Diameter Designation					
D2	✓ Dia Range (mm) Ø16 -19.5 (With 0.50mm)	✓ Dia Range (mm) Ø20 - 23.5 (With 0.50mm)	✓ Dia Range (mm) Ø24 - 29.5 (With 0.50mm)	✓ Dia Range (mm) Ø30 - 44	✓ Dia Range (mm) Ø45 - 60
	Page: **J480**	Page: **J480**	Page: **J480**	Page: **J481**	Page: **J481**
D3	✓ Dia Range (mm) Ø16 -19.5 (With 0.50mm)	✓ Dia Range (mm) Ø20 - 23.5 (With 0.50mm)	✓ Dia Range (mm) Ø24 - 29.5 (With 0.50mm)	✓ Dia Range (mm) Ø30 - 44	✓ Dia Range (mm) Ø45 - 60
	Page: **J482**	Page: **J482**	Page: **J482**	Page: **J483**	Page: **J483**
D4	✓ Dia Range (mm) Ø16 -19.5 (With 0.50mm)	✓ Dia Range (mm) Ø20 - 23.5 (With 0.50mm)	✓ Dia Range (mm) Ø24 - 29.5 (With 0.50mm)	✓ Dia Range (mm) Ø30 - 44	✓ Dia Range (mm) Ø45 - 50
	Page: **J484**	Page: **J484**	Page: **J484**	Page: **J485**	Page: **J485**
D5	✓ Dia Range (mm) Ø16 -19	✓ Dia Range (mm) Ø20 - 23	✓ Dia Range (mm) Ø24 - 29	✓ Dia Range (mm) Ø30 - 40	-
	Page: **J486**	Page: **J486**	Page: **J486**	Page: **J486**	
D6	-	-	-	-	-

Insert		SPMG 050204 TGTC	SPMG 060204 TGTC	SPMG 07T308 TGTC	SPMG 090408 TGTC	SPMG 110408 TGTC	SPMG 140512 TGTC
Dimeter Range (mm)		Ø12-15	Ø15.5-21.5	Ø22-27.5	Ø28-33	Ø34-41	Ø42-54
Size & Diameter Designation	D2	✓ Dia Range (mm) Ø12 - 15 (With 0.50mm)	✓ Dia Range (mm) Ø15.5 - 21.5 (With 0.50mm)	✓ Dia Range (mm) Ø22 - 27.5 (With 0.50mm)	✓ Dia Range (mm) Ø28 - 33 (With 0.50mm Up to 29.5)	✓ Dia Range (mm) Ø34 - 41	✓ Dia Range (mm) Ø42 - 50
		Page: **J492**	Page: J**492**	Page: J**492**	Page: **J493**	Page: **J493**	Page: **J493**
	D3	✓ Dia Range (mm) Ø12 - 15 (With 0.50mm)	✓ Dia Range (mm) Ø15.5 - 21.5 (With 0.50mm)	✓ Dia Range (mm) Ø22 - 27.5 (With 0.50mm)	✓ Dia Range (mm) Ø28 - 33 (With 0.50mm Up to 29.5)	✓ Dia Range (mm) Ø34 - 41	✓ Dia Range (mm) Ø42 - 54
		Page: **J494**	Page: **J494**	Page: **J494**	Page: **J495**	Page: **J495**	Page: **J495**
	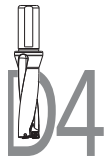 D4	✓ Dia Range (mm) Ø12 - 15 (With 0.50mm)	✓ Dia Range (mm) Ø15.5 - 21.5 (With 0.50mm)	✓ Dia Range (mm) Ø22 - 27.5 (With 0.50mm)	✓ Dia Range (mm) Ø28 - 33 (With 0.50mm Up to 29.5)	✓ Dia Range (mm) Ø34 - 41	✓ Dia Range (mm) Ø42 - 44
		Page: **J496**	Page: **J496**	Page: **J496**	Page: **J497**	Page: **J497**	Page: **J497**
	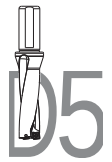 D5	✓ Dia Range (mm) Ø13 - 15	✓ Dia Range (mm) Ø15 - 21	✓ Dia Range (mm) Ø22 - 27	✓ Dia Range (mm) Ø28 - 29	-	-
		Page: **J498**	Page: **J498**	Page: **J498**	Page: **J498**		
	D6	-	-	-	-	-	

Insert		SOMT 050204 TGTC	SOMT 060204 TGTC	SOMT 070306 TGTC	SOMT 08T306 TGTC	SOMT 09T308 TGTC
Dimeter Range (mm)		Ø14-16	Ø16.5-19	Ø19-22	Ø22.5-26	Ø26.5-30
Size & Diameter Designation	D2	-	-	-	-	-
	D3	✓ Dia Range (mm) Ø14 - 16 (With 0.50mm)	✓ Dia Range (mm) Ø16.5 - 19 (With 0.50mm)	✓ Dia Range (mm) Ø19 - 22 (With 0.50mm)	✓ Dia Range (mm) Ø22.5 - 26 (With 0.50mm)	✓ Dia Range (mm) Ø26.5 - 30 (With 0.50mm)
		Page: **J500**	Page: **J500**	Page: **J500**	Page: **J501**	Page: **J501**
	D4	✓ Dia Range (mm) Ø14 - 16	✓ Dia Range (mm) Ø17 - 19	✓ Dia Range (mm) Ø20 - 22	✓ Dia Range (mm) Ø23 - 26	✓ Dia Range (mm) Ø27 - 30
		Page: **J502**	Page: **J502**	Page: **J502**	Page: **J502**	Page: **J502**
	D5	✓ Dia Range (mm) Ø14 - 16	✓ Dia Range (mm) Ø17 - 19	✓ Dia Range (mm) Ø20 - 22	✓ Dia Range (mm) Ø23 - 26	✓ Dia Range (mm) Ø27 - 30
		Page: **J503**	Page: **J503**	Page: **J503**	Page: **J503**	Page: **J503**
	D6	-	-	-	-	-

Insert		SPMT(PD) 040204 XOMT(PD) 040204 KRLY	SPMT(PD) 050204 XOMT(PD) 050204 KRLY	SPMT(PD) 060205 XOMT(PD) 060204 KRLY	SPMT(PD) 07T208 XOMT(PD) 07T208 KRLY	SPMT(PD) 090308 XOMT(PD) 090305 KRLY	SPMT(PD) 11T308 XOMT(PD) 11T306 KRLY
Dimeter Range (mm)		Ø12.5-13.5	Ø14-16	Ø16.5-19.5	Ø20-23.5	Ø24-29.5	Ø30
Size & Diameter Designation	D2	-	✓ Dia Range (mm) Ø14 - 16 (With 0.50mm)	✓ Dia Range (mm) Ø17 - 19 (With 0.50mm)	✓ Dia Range (mm) Ø20 - 23 (With 0.50mm)	✓ Dia Range (mm) Ø24 - 29 (With 0.50mm)	✓ Dia Range (mm) Ø30
			Page: **J505**	Page: **J505**	Page: **J505**	Page: **J505**	Page: **J505**
	D3	✓ Dia Range (mm) Ø12.5 - 13.5 (With 0.50mm)	✓ Dia Range (mm) Ø14 - 16 (With 0.50mm)	✓ Dia Range (mm) Ø16.5 - 19.5 (With 0.50mm)	✓ Dia Range (mm) Ø20 - 23.5 (With 0.50mm)	✓ Dia Range (mm) Ø24 - 29.5 (With 0.50mm)	✓ Dia Range (mm) Ø30
		Page: **J506**	Page: **J506**	Page: **J506**	Page: **J506**	Page: **J507**	Page: **J507**
	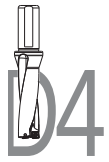 D4	✓ Dia Range (mm) Ø12.5 - 13.5 (With 0.50mm)	✓ Dia Range (mm) Ø14 - 16 (With 0.50mm)	✓ Dia Range (mm) Ø16.5 - 19.5 (With 0.50mm)	✓ Dia Range (mm) Ø20 - 23.5 (With 0.50mm)	✓ Dia Range (mm) Ø24 - 29.5 (With 0.50mm)	✓ Dia Range (mm) Ø30
		Page: **J508**	Page: **J508**	Page: **J508**	Page: **J508**	Page: **J509**	Page: **J509**
	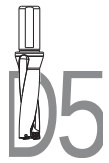 D5	✓ Dia Range (mm) Ø13	✓ Dia Range (mm) Ø14 - 16	✓ Dia Range (mm) Ø17 - 19	✓ Dia Range (mm) Ø20 - 23	✓ Dia Range (mm) Ø24 - 29	✓ Dia Range (mm) Ø30
		Page: **J510**	Page: **J510**	Page: **J510**	Page: **J510**	Page: **J510**	Page: **J510**
	D6	-	✓ Dia Range (mm) Ø16	✓ Dia Range (mm) Ø17 - 19	✓ Dia Range (mm) Ø20 - 23	✓ Dia Range (mm) Ø24 - 29	✓ Dia Range (mm) Ø30
			Page: **J511**	Page: **J511**	Page: **J511**	Page: **J511**	Page: **J511**

Insert	SPGT 050204 (PM / EM) ZCC	SPGT 060204 (PM / EM) ZCC	SPGT 07T308 (PM / EM) ZCC	SPGT 090408 (PM / EM) ZCC	SPGT 110408 (PM / EM) ZCC
Dimeter Range (mm)	Ø13-15	Ø15.5-21.5	Ø22-27	Ø28-33	Ø34-40
Size & Diameter Designation					
D2	-	-	-	-	-
D3	✓ Dia Range (mm) Ø13 - 15 (With 0.50mm)	✓ Dia Range (mm) Ø15.5 - 21.5 (With 0.50mm)	✓ Dia Range (mm) Ø22 - 27 (With 0.50mm Up to 24.5)	✓ Dia Range (mm) Ø28 - 33	✓ Dia Range (mm) Ø34 - 40 (With 0.50mm)
	Page: **J512**	Page: **J512**	Page: **J512**	Page: **J513**	Page: **J513**
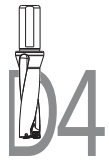 D4	✓ Dia Range (mm) Ø13 - 15	✓ Dia Range (mm) Ø16 - 21	✓ Dia Range (mm) Ø22 - 27	✓ Dia Range (mm) Ø28 - 30	-
	Page: **J5154**	Page: **J514**	Page: **J514**		
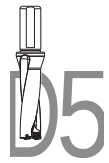 D5	✓ Dia Range (mm) Ø13 - 15	✓ Dia Range (mm) Ø16 - 21	✓ Dia Range (mm) Ø22 - 27	✓ Dia Range (mm) Ø28 - 30	-
	Page: **J515**	Page: **J515**	Page: **J515**	Page: **J515**	
D6	-	-	-	-	-

Insert		SOMX 050204	SOMX 060304	SOMX 070305	SOMT 09T306	SOMT 120408
Dimeter Range (mm)		Ø14-17	Ø18-20	Ø21-24	Ø25-34	Ø35-40
Size & Diameter Designation	D2	-	-	-	-	-
	D3	✓ Dia Range (mm) Ø14 - 17	✓ Dia Range (mm) Ø18 - 20	✓ Dia Range (mm) Ø21 - 24	✓ Dia Range (mm) Ø25 - 34	✓ Dia Range (mm) Ø35 - 40
		Page: **J516**	Page: **J516**	Page: **J516**	Page: **J516**	Page: **J516**
	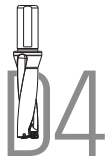 D4	✓ Dia Range (mm) Ø14 - 17	✓ Dia Range (mm) Ø18 - 20	✓ Dia Range (mm) Ø21 - 24	✓ Dia Range (mm) Ø25 - 34	✓ Dia Range (mm) Ø35 - 40
		Page: **J517**	Page: **J517**	Page: **J517**	Page: **J517**	Page: **J517**
	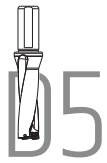 D5	✓ Dia Range (mm) Ø14 - 17	✓ Dia Range (mm) Ø18 - 20	✓ Dia Range (mm) Ø21 - 24	✓ Dia Range (mm) Ø25 - 30	-
		Page: **J518**	Page: **J518**	Page: **J518**	Page: **J518**	
	D6	-	-	-	-	-

Insert		XPMT 0502 TNGLY	XPMT 06X3 TNGLY	XPMT 07H2 TNGLY	XPMT 08T3 TNGLY	
Dimeter Range (mm)		Ø15-17	Ø17.5-21.5	Ø22-26	Ø27-32	
Size & Diameter Designation	D2	-	-	-	-	-
	D3	✓ Dia Range (mm) Ø15 - 17 (With 0.50mm)	✓ Dia Range (mm) Ø18 - 21.5 (With 0.50mm)	✓ Dia Range (mm) Ø22 - 26 (With 0.50mm Up to 24.5)	✓ Dia Range (mm) Ø27 - 32	-
		Page: **J489**	Page: **J489**	Page: **J489**	Page: **J489**	
	D4	-	-	-	-	-

Insert		WWMU 05X205 TNGLY	WWMU 060306 TNGLY	WWMU 08X408 TNGLY		
Dimeter Range (mm)		Ø20-23	Ø24-27	Ø28-32		
Size & Diameter Designation	D2	-	-	-	-	-
	D3	✓ Dia Range (mm) Ø20 - 23	✓ Dia Range (mm) Ø24 - 27	✓ Dia Range (mm) Ø28 - 32	-	-
		Page: **J490**	Page: **J490**	Page: **J490**		
	D4	-	-	-	-	-

Insert		SOMX 052704 MTSBH	SOMX 063005 MTSBH	SOMX 073505 MTSBH	SOMT 084005 MTSBH	SOMT 094506 MTSBH
Dimeter Range (mm)		Ø14-16.5	Ø17-19.5	Ø20-22.5	Ø23-27	Ø28-33
Size & Diameter Designation	D2	-	-	-	-	-
	D3	✓ Dia Range (mm) Ø14 - 16.5 (With 0.50mm)	✓ Dia Range (mm) Ø17 - 19.5 (With 0.50mm)	✓ Dia Range (mm) Ø20 - 22.5 (With 0.50mm)	✓ Dia Range (mm) Ø23 - 27 (With 0.50mm Up to 24.5)	✓ Dia Range (mm) Ø28 - 33
		Page: **J491**	Page: **J491**	Page: **J491**	Page: **J491**	Page: **J491**
	D4	-	-	-	-	-

Insert		880-02 SNDVK	880-03 SNDVK	880-04 SNDVK	880-05 SNDVK	880-06 SNDVK
Dimeter Range (mm)		Ø14-16	Ø16.5-19.5	Ø20-23.5	Ø24-29	Ø30
Size & Diameter Designation	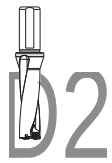 D2	-	-	-	-	-
	D3	✓ Dia Range (mm) Ø14 - 16 (With 0.50mm)	✓ Dia Range (mm) Ø16.5 - 19.5 (With 0.50mm)	✓ Dia Range (mm) Ø20 - 23.5 (With 0.50mm)	✓ Dia Range (mm) Ø24 - 29 (With 0.50mm Up to 24.5)	✓ Dia Range (mm) Ø30
		Page: **J488**	Page: **J488**	Page: **J488**	Page: **J488**	Page: **J488**
	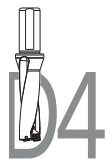 D4	-	-	-	-	-

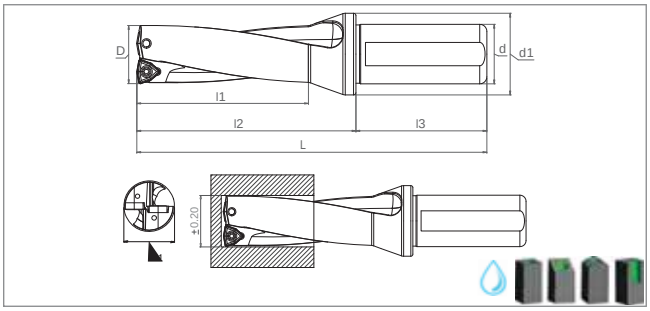

Ordering Code	Item Designation	Dimensions (mm)								Master Insert*
	SDUM Dx2 - WCM. 030208 / 040208 / 050308 U-DRILL	POWER SERIES	*D*	*d*	*d1*	*L*	*l1*	*l2*	*l3*	
SM16248	SDUM 16xD2 WCM.030208	✓	16	25	34	108	32	53	55	WCM. 030208
SM16255	SDUM 16.5xD2 WCM.030208	✓	16.5	25	34	110	34	55	55	
SM16262	SDUM 17xD2 WCM.030208	✓	17	25	34	110	34	55	55	
SM16279	SDUM 17.5xD2 WCM.030208	✓	17.5	25	34	113	36	58	55	
SM16286	SDUM 18XD2 WCM.030208	✓	18	25	34	113	36	58	55	
SM16293	SDUM 18.5XD2 WCM.030208	✓	18.5	25	34	115	38	60	55	
SM16323	SDUM 19XD2 WCM.030208	✓	19	25	34	115	38	60	55	
SM16330	SDUM 19.5XD2 WCM.030208	✓	19.5	25	34	119	40	64	55	
SM17016	SDUM 20XD2 WCM.040208	✓	20	25	34	119	40	64	55	WCM. 040208
SM17061	SDUM 20.5XD2 WCM.040208	✓	20.5	25	34	121	42	66	55	
SM17023	SDUM 21XD2 WCM.040208	✓	21	25	34	121	42	66	55	
SM17047	SDUM 21.5XD2 WCM.040208	✓	21.5	25	34	123	44	68	55	
SM17030	SDUM 22XD2 WCM.040208	✓	22	25	34	123	44	68	55	
SM17054	SDUM 22.5XD2 WCM.040208	✓	22.5	25	34	127	46	72	55	
SM17078	SDUM 23XD2 WCM.040208	✓	23	25	34	127	46	72	55	
SM17085	SDUM 23.5XD2 WCM.040208	✓	23.5	25	34	130	48	75	55	
SM16545	SDUM 24XD2 WCM.050308	✓	24	25	44	130	48	75	55	WCM. 050308
SM17290	SDUM 24.5XD2 WCM.050308	✓	24.5	25	44	133	50	78	55	
SM17092	SDUM 25XD2 WCM.050308	✓	25	25	44	133	50	78	55	
SM17320	SDUM 25.5XD2 WCM.050308	✓	25.5	25	44	135	52	80	55	
SM17108	SDUM 26XD2 WCM.050308	✓	26	25	44	135	52	80	55	
SM17306	SDUM 26.5XD2 WCM.050308	✓	26.5	25	44	137	54	82	55	
SM17115	SDUM 27XD2 WCM.050308	✓	27	25	44	137	54	82	55	
SM17313	SDUM 27.5XD2 WCM.050308	✓	27.5	25	44	140	56	85	55	
SM17122	SDUM 28XD2 WCM.050308	✓	28	25	44	140	56	85	55	
SM16996	SDUM 28.5XD2 WCM.050308	✓	28.5	25	44	142	58	87	55	
SM17139	SDUM 29XD2 WCM.050308	✓	29	25	44	142	58	87	55	
SM17009	SDUM 29.5XD2 WCM.050308	✓	29.5	25	44	151	60	96	55	

Hole tolerance is given for average conditions and may vary depending on machine rigidity, insert, and operating parameters.
Delik tolerans değerleri ortalama çalışma koşulları esas alınarak belirlenmiş olup, makine kapasitesi ve kullanılan kesici elmas özelliklerine göre farklılık gösterebilir

Size Designation	Master Insert*	Spare Parts		
		Screw	Torx Key	Screw Torque Value N·m
D16 - D23.5	WCM. 030208	SSV M2.5x6-9505	STK-T08-9908	1,0
	WCM. 040208			
D24 - D29.5	WCM. 050308	SSV M3x8-9508		1,9

Continued on next page
Devamı sonraki sayfada

*Suitable Insert is ISO

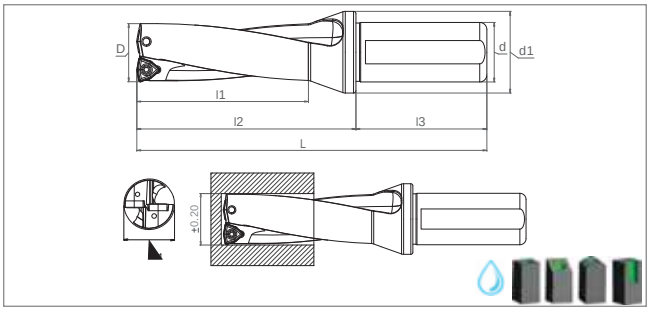

Ordering Code	Item Designation	Dimensions (mm)								Master Insert*
	SDUM Dx2 - WCM. 06T308 / 080412 U-DRILL	POWER SERIES	*D*	*d*	*d1*	*L*	*l1*	*l2*	*l3*	
SM17146	SDUM 30XD2 WCM.06T308	✓	30	32	44	141	60	81	60	WCM. 06T308
SM17153	SDUM 31XD2 WCM.06T308	✓	31	32	44	144	62	84	60	
SM17160	SDUM 32XD2 WCM.06T308	✓	32	32	44	146	64	86	60	
SM17177	SDUM 33XD2 WCM.06T308	✓	33	32	44	149	66	89	60	
SM17184	SDUM 34XD2 WCM.06T308	✓	34	32	44	151	68	91	60	
SM17191	SDUM 35XD2 WCM.06T308	✓	35	32	44	154	70	94	60	
SM17207	SDUM 36XD2 WCM.06T308	✓	36	32	44	157	72	97	60	
SM17214	SDUM 37XD2 WCM.06T308	✓	37	32	44	160	74	100	60	
SM17221	SDUM 38XD2 WCM.06T308	✓	38	32	44	163	76	103	60	
SM17238	SDUM 39XD2 WCM.06T308	✓	39	32	44	165	78	105	60	
SM17245	SDUM 40XD2 WCM.06T308	✓	40	32	44	168	80	108	60	
SM17252	SDUM 41XD2 WCM.06T308	✓	41	32	44	171	82	111	60	
SM17269	SDUM 42XD2 WCM.06T308	✓	42	32	44	173	84	113	60	
SM17276	SDUM 43XD2 WCM.06T308	✓	43	32	44	176	86	116	60	
SM17283	SDUM 44XD2 WCM.06T308	✓	44	32	44	178	88	118	60	
SM17337	SDUM 45XD2 WCM.080412	✓	45	40	60	192	90	122	70	WCM. 080412
SM17368	SDUM 46XD2 WCM.080412	✓	46	40	60	195	92	125	70	
SM17375	SDUM 47XD2 WCM.080412	✓	47	40	60	197	94	127	70	
SM17399	SDUM 48XD2 WCM.080412	✓	48	40	60	200	96	130	70	
SM17412	SDUM 49XD2 WCM.080412	✓	49	40	60	202	98	132	70	
SM17436	SDUM 50XD2 WCM.080412	✓	50	40	60	205	100	135	70	
SM17443	SDUM 51XD2 WCM.080412	✓	51	40	60	207	102	137	70	
SM17467	SDUM 52XD2 WCM.080412	✓	52	40	60	210	104	140	70	
SM17528	SDUM 53XD2 WCM.080412	✓	53	40	60	212	106	142	70	
SM17573	SDUM 54XD2 WCM.080412	✓	54	40	60	215	108	145	70	
SM17597	SDUM 55XD2 WCM.080412	✓	55	40	60	217	110	147	70	
SM17672	SDUM 56XD2 WCM.080412	✓	56	40	60	220	112	150	70	
SM17696	SDUM 57XD2 WCM.080412	✓	57	40	60	222	114	152	70	
SM17757	SDUM 58XD2 WCM.080412	✓	58	40	60	225	116	155	70	
SM17788	SDUM 59XD2 WCM.080412	✓	59	40	60	227	118	157	70	
SM17801	SDUM 60XD2 WCM.080412	✓	60	40	60	230	120	160	70	

Hole tolerance is given for average conditions and may vary depending on machine rigidity, insert, and operating parameters.

Delik tolerans değerleri ortalama çalışma koşulları esas alınarak belirlenmiş olup, makine kapasitesi ve kullanılan kesici elmas özelliklerine göre farklılık gösterebilir

Size Designation	Master Insert*	Spare Parts		
		Screw	Torx Key	Screw Torque Value N·m
D30 - D44	WCM. 06T308	SSV M3.5x9-SC-9544	STK-T10-9909	2,7
D45 - D60	WCM. 080412	SSV M4x10-9514	STK-T15-9910	3,9

*Suitable Insert is ISO

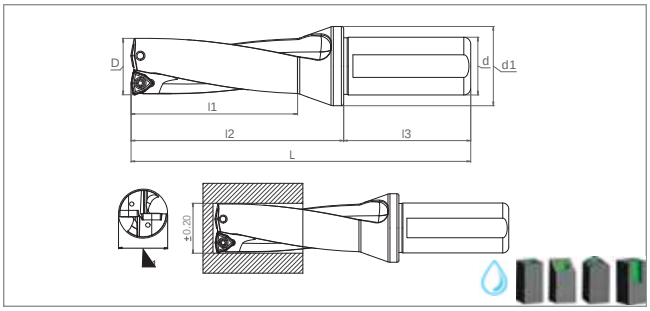

Ordering Code	Item Designation	Dimensions (mm)								Master Insert*
	SDUM Dx3 - WCM. 030208 / 040208 / 050308 U-DRILL	POWER SERIES	*D*	*d*	*d1*	*L*	*l1*	*l2*	*l3*	
SM16309	SDUM 16XD3 WCM.030208	✓	16	25	34	124	48	69	55	WCM. 030208
SM16187	SDUM 16.5XD3 WCM.030208	✓	16.5	25	34	127	51	72	55	
SM16194	SDUM 17XD3 WCM.030208	✓	17	25	34	127	51	72	55	
SM16200	SDUM 17.5XD3 WCM.030208	✓	17.5	25	34	131	54	76	55	
SM16217	SDUM 18XD3 WCM.030208	✓	18	25	34	131	54	76	55	
SM16224	SDUM 18.5XD3 WCM.030208	✓	18.5	25	34	134	57	79	55	
SM16231	SDUM 19XD3 WCM.030208	✓	19	25	34	134	57	79	55	
SM16316	SDUM 19.5XD3 WCM.030208	✓	19.5	25	34	139	60	84	55	
SM16347	SDUM 20XD3 WCM.040208	✓	20	25	34	139	60	84	55	WCM. 040208
SM16354	SDUM 20.5XD3 WCM.040208	✓	20.5	25	34	142	63	87	55	
SM16361	SDUM 21XD3 WCM.040208	✓	21	25	34	142	63	87	55	
SM16378	SDUM 21.5XD3 WCM.040208	✓	21.5	25	34	145	66	90	55	
SM16385	SDUM 22XD3 WCM.040208	✓	22	25	34	145	66	90	55	
SM16392	SDUM 22.5XD3 WCM.040208	✓	22.5	25	34	150	69	95	55	
SM16408	SDUM 23XD3 WCM.040208	✓	23	25	34	150	69	95	55	
SM16415	SDUM 23.5XD3 WCM.040208	✓	23.5	25	34	154	72	99	55	
SM16422	SDUM 24XD3 WCM.050308	✓	24	25	34	154	72	99	55	WCM. 050308
SM16439	SDUM 24.5XD3 WCM.050308	✓	24.5	25	34	158	75	103	55	
SM16446	SDUM 25XD3 WCM.050308	✓	25	25	34	158	75	103	55	
SM16453	SDUM 25.5XD3 WCM.050308	✓	25.5	25	34	161	78	106	55	
SM16460	SDUM 26XD3 WCM.050308	✓	26	25	34	161	78	106	55	
SM16477	SDUM 26.5XD3 WCM.050308	✓	26.5	25	34	164	81	109	55	
SM16484	SDUM 27XD3 WCM.050308	✓	27	25	34	164	81	109	55	
SM16491	SDUM 27.5XD3 WCM.050308	✓	27.5	25	34	168	84	113	55	
SM16507	SDUM 28XD3 WCM.050308	✓	28	25	34	168	84	113	55	
SM16514	SDUM 28.5XD3 WCM.050308	✓	28.5	25	34	171	87	116	55	
SM16521	SDUM 29XD3 WCM.050308	✓	29	25	34	171	87	116	55	
SM16538	SDUM 29.5XD3 WCM.050308	✓	29.5	25	34	177	90	122	55	

Hole tolerance is given for average conditions and may vary depending on machine rigidity, insert, and operating parameters.

Delik tolerans değerleri ortalama çalışma koşulları esas alınarak belirlenmiş olup, makine kapasitesi ve kullanılan kesici elmas özelliklerine göre farklılık gösterebilir

Size Designation	Master Insert*	Spare Parts		
		Screw	Torx Key	Screw Torque Value N·m
D16 - D23.5	WCM. 030208	SSV M2.5x6-9505	STK-T08-9908	1,0
	WCM. 040208			
D24 - D29.5	WCM. 050308	SSV M3x8-9508		1,9

Continued on next page
Devamı sonraki sayfada

*Suitable Insert is ISO

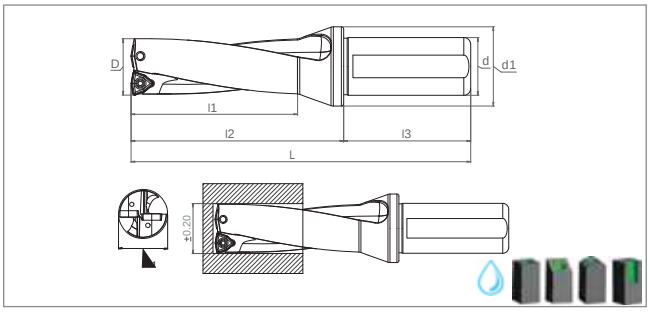

Ordering Code	Item Designation	Dimensions (mm)								Master Insert*
	SDUM Dx3 - WCM. 06T308 / 080412 U-DRILL	POWER SERIES	*D*	*d*	*d1*	*L*	*l1*	*l2*	*l3*	
SM16552	SDUM 30XD3 WCM.06T308	✓	30	32	44	171	90	111	60	WCM. 06T308
SM62511	**SDUM 30.5XD3 WCM.06T308**	✓	**30.5**	**32**	**44**	**175**	**93**	**115**	**60**	
SM16569	SDUM 31XD3 WCM.06T308	✓	31	32	44	175	93	115	60	
SM16576	SDUM 32XD3 WCM.06T308	✓	32	32	44	178	96	118	60	
SM16583	SDUM 33XD3 WCM.06T308	✓	33	32	44	182	99	122	60	
SM16590	SDUM 34XD3 WCM.06T308	✓	34	32	44	185	102	125	60	
SM16606	SDUM 35XD3 WCM.06T308	✓	35	32	44	189	105	129	60	
SM16613	SDUM 36XD3 WCM.06T308	✓	36	32	44	193	108	133	60	
SM16620	SDUM 37XD3 WCM.06T308	✓	37	32	44	196	111	136	60	
SM16637	SDUM 38XD3 WCM.06T308	✓	38	32	44	201	114	141	60	
SM16644	SDUM 39XD3 WCM.06T308	✓	39	32	44	204	117	144	60	
SM16651	SDUM 40XD3 WCM.06T308	✓	40	32	44	208	120	148	60	
SM16668	SDUM 41XD3 WCM.06T308	✓	41	32	44	212	123	152	60	
SM16675	SDUM 42XD3 WCM.06T308	✓	42	32	44	215	126	155	60	
SM16682	SDUM 43XD3 WCM.06T308	✓	43	32	44	219	129	159	60	
SM16699	SDUM 44XD3 WCM.06T308	✓	44	32	44	222	132	162	60	
SM17344	SDUM 45XD3 WCM.080412	✓	45	40	60	237	135	167	70	WCM. 080412
SM17351	SDUM 46XD3 WCM.080412	✓	46	40	60	241	138	171	70	
SM17382	SDUM 47XD3 WCM.080412	✓	47	40	60	244	141	174	70	
SM17405	SDUM 48XD3 WCM.080412	✓	48	40	60	248	144	178	70	
SM17429	SDUM 49XD3 WCM.080412	✓	49	40	60	251	147	181	70	
SM17450	SDUM 50XD3 WCM.080412	✓	50	40	60	255	150	185	70	
SM17474	SDUM 51XD3 WCM.080412	✓	51	40	60	258	153	188	70	
SM17535	SDUM 52XD3 WCM.080412	✓	52	40	60	261	156	191	70	
SM17580	SDUM 53XD3 WCM.080412	✓	53	40	60	264	159	194	70	
SM17658	SDUM 54XD3 WCM.080412	✓	54	40	60	267	162	197	70	
SM17689	SDUM 55XD3 WCM.080412	✓	55	40	60	270	165	200	70	
SM17740	SDUM 56XD3 WCM.080412	✓	56	40	60	273	168	203	70	
SM17764	SDUM 57XD3 WCM.080412	✓	57	40	60	276	171	206	70	
SM17795	SDUM 58XD3 WCM.080412	✓	58	40	60	279	174	209	70	
SM17825	SDUM 59XD3 WCM.080412	✓	59	40	60	282	177	212	70	
SM17832	SDUM 60XD3 WCM.080412	✓	60	40	60	285	180	215	70	

Hole tolerance is given for average conditions and may vary depending on machine rigidity, insert, and operating parameters.

Delik tolerans değerleri ortalama çalışma koşulları esas alınarak belirlenmiş olup, makine kapasitesi ve kullanılan kesici elmas özelliklerine göre farklılık gösterebilir

Size Designation	Master Insert*	Spare Parts		
		Screw	Torx Key	Screw Torque Value N·m
D30 - D44	WCM. 06T308	SSV M3.5x9-SC-9544	STK-T10-9909	2,7
D45 - D60	WCM. 080412	SSV M4x10-9514	STK-T15-9910	3,9

*Suitable Insert is ISO

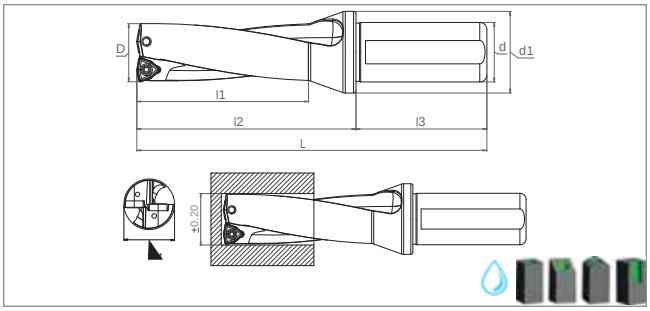

Ordering Code	Item Designation	Dimensions (mm)								Master Insert*
	SDUM Dx4 - WCM. - ISO 030208 / 040208 / 050308 U-DRILL	POWER SERIES	*D*	*d*	*d1*	*L*	*l1*	*l2*	*l3*	
SM16712	SDUM 16XD4 WCM.030208	✓	16	25	34	140	64	85	55	WCM. 030208
SM17887	SDUM 16.5XD4 WCM.030208	✓	16.5	25	34	144	68	89	55	
SM16729	SDUM 17XD4 WCM.030208	✓	17	25	34	144	68	89	55	
SM17894	SDUM 17.5XD4 WCM.030208	✓	17.5	25	34	149	72	94	55	
SM16705	SDUM 18XD4 WCM.030208	✓	18	25	34	149	72	94	55	
SM17900	SDUM 18.5XD4 WCM.030208	✓	18.5	25	34	153	76	98	55	
SM16736	SDUM 19XD4 WCM.030208	✓	19	25	34	153	76	98	55	
SM17917	SDUM 19.5XD4 WCM.030208	✓	19.5	25	34	159	80	104	55	
SM16743	SDUM 20XD4 WCM.040208	✓	20	25	34	159	80	104	55	WCM. 040208
SM17863	SDUM 20.5XD4 WCM.040208	✓	20.5	25	34	163	84	108	55	
SM16750	SDUM 21XD4 WCM.040208	✓	21	25	34	163	84	108	55	
SM17924	SDUM 21.5XD4 WCM.040208	✓	21.5	25	34	167	88	112	55	
SM16767	SDUM 22XD4 WCM.040208	✓	22	25	34	167	88	112	55	
SM17870	SDUM 22.5XD4 WCM.040208	✓	22.5	25	34	173	92	118	55	
SM16774	SDUM 23XD4 WCM.040208	✓	23	25	34	173	92	118	55	
SM17931	SDUM 23.5XD4 WCM.040208	✓	23.5	25	34	178	96	123	55	
SM16781	SDUM 24XD4 WCM.050308	✓	24	25	34	178	96	123	55	WCM. 050308
SM17948	SDUM 24.5XD4 WCM.050308	✓	24.5	25	34	183	100	128	55	
SM16798	SDUM 25XD4 WCM.050308	✓	25	25	34	183	100	128	55	
SM17955	SDUM 25.5XD4 WCM.050308	✓	25.5	25	34	187	104	132	55	
SM16804	SDUM 26XD4 WCM.050308	✓	26	25	34	187	104	132	55	
SM17962	SDUM 26.5XD4 WCM.050308	✓	26.5	25	34	191	108	136	55	
SM16811	SDUM 27XD4 WCM.050308	✓	27	25	34	191	108	136	55	
SM17979	SDUM 27.5XD4 WCM.050308	✓	27.5	25	34	196	112	141	55	
SM16828	SDUM 28XD4 WCM.050308	✓	28	25	34	196	112	141	55	
SM17986	SDUM 28.5XD4 WCM.050308	✓	28.5	25	34	200	116	145	55	
SM16835	SDUM 29XD4 WCM.050308	✓	29	25	34	200	116	145	55	
SM17993	SDUM 29.5XD4 WCM.050308	✓	29.5	25	34	202	120	147	55	

Hole tolerance is given for average conditions and may vary depending on machine rigidity, insert, and operating parameters.

Delik tolerans değerleri ortalama çalışma koşulları esas alınarak belirlenmiş olup, makine kapasitesi ve kullanılan kesici elmas özelliklerine göre farklılık gösterebilir

Size Designation	Master Insert*	Spare Parts		
		Screw	Torx Key	Screw Torque Value N·m
D16 - D23.5	WCM. 030208	SSV M2.5x6-9505	STK-T08-9908	1,0
	WCM. 040208			
D24 - D29.5	WCM. 050308	SSV M3x8-9508		1,9

*Suitable Insert is ISO

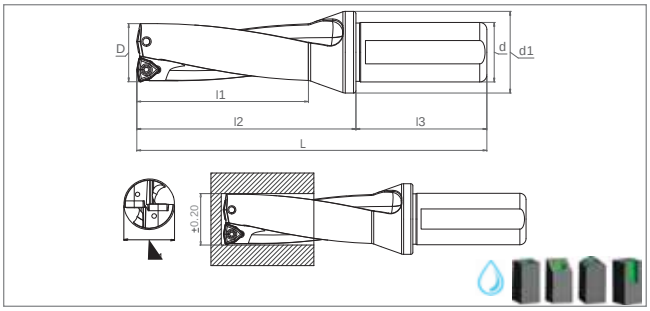

Ordering Code	Item Designation	Dimensions (mm)								Master Insert*
	SDUM Dx4 - WCM. - ISO 06T308 / 080412 U-DRILL	POWER SERIES	*D*	*d*	*d1*	*L*	*l1*	*l2*	*l3*	
SM16842	SDUM 30XD4 WCM.06T308	✓	30	32	44	201	120	141	60	WCM. 06T308
SM16859	SDUM 31XD4 WCM.06T308	✓	31	32	44	206	124	146	60	
SM16866	SDUM 32XD4 WCM.06T308	✓	32	32	44	210	128	150	60	
SM16873	SDUM 33XD4 WCM.06T308	✓	33	32	44	215	132	155	60	
SM20931	SDUM 33.5XD4 WCM.06T308	✓	33.5	32	44	219	134	159	60	
SM16880	SDUM 34XD4 WCM.06T308	✓	34	32	44	219	136	159	60	
SM16897	SDUM 35XD4 WCM.06T308	✓	35	32	44	224	140	164	60	
SM16903	SDUM 36XD4 WCM.06T308	✓	36	32	44	229	144	169	60	
SM16910	SDUM 37XD4 WCM.06T308	✓	37	32	44	234	148	174	60	
SM16927	SDUM 38XD4 WCM.06T308	✓	38	32	44	239	152	179	60	
SM25394	SDUM 38.5XD4 WCM.06T308	✓	38.5	32	44	243	156	183	60	
SM16934	SDUM 39XD4 WCM.06T308	✓	39	32	44	243	156	183	60	
SM16941	SDUM 40XD4 WCM.06T308	✓	40	32	44	248	160	188	60	
SM16958	SDUM 41XD4 WCM.06T308	✓	41	32	44	253	164	193	60	
SM16965	SDUM 42XD4 WCM.06T308	✓	42	32	44	257	168	197	60	
SM16972	SDUM 43XD4 WCM.06T308	✓	43	32	44	262	172	202	60	
SM16989	SDUM 44XD4 WCM.06T308	✓	44	32	44	266	176	206	60	
SM17665	SDUM 45XD4 WCM.080412	✓	45	40	60	272	180	202	70	WCM. 080412
SM17726	SDUM 46XD4 WCM.080412	✓	46	40	60	276	184	206	70	
SM17771	SDUM 47XD4 WCM.080412	✓	47	40	60	280	188	210	70	
SM17818	SDUM 48XD4 WCM.080412	✓	48	40	60	284	192	214	70	
SM17849	SDUM 49XD4 WCM.080412	✓	49	40	60	288	196	218	70	
SM17856	SDUM 50XD4 WCM.080412	✓	50	40	60	292	200	222	70	

Hole tolerance is given for average conditions and may vary depending on machine rigidity, insert, and operating parameters.

Delik tolerans değerleri ortalama çalışma koşulları esas alınarak belirlenmiş olup, makine kapasitesi ve kullanılan kesici elmas özelliklerine göre farklılık gösterebilir

Size Designation	Master Insert*	Spare Parts		
		Screw	Torx Key	Screw Torque Value N·m
D30 - D44	WCM. 06T308	SSV M3.5x9-SC-9544	STK-T10-9909	2,7
D45 - D60	WCM. 080412	SSV M4x10-9514	STK-T15-9910	3,9

*Suitable Insert is ISO

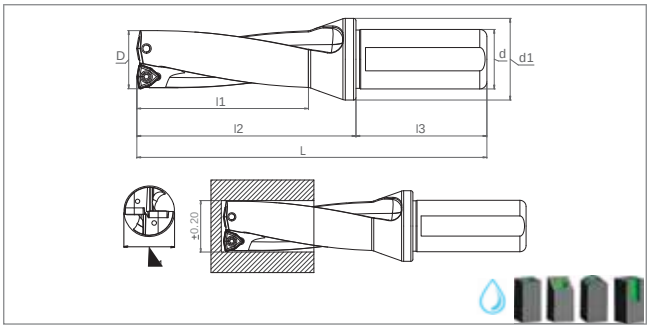

Ordering Code	Item Designation	Dimensions (mm)								Master Insert*
	SDUM Dx5 - WCM. 030208 / 040208 / 050308 / 06T308 U-DRILL	POWER SERIES	*D*	*d*	*d1*	*L*	*l1*	*l2*	*l3*	
SM17481	SDUM 16XD5 WCM.030208	✓	16	25	34	155	80	100	55	WCM. 030208
SM17498	SDUM 17XD5 WCM.030208	✓	17	25	34	160	85	105	55	
SM17504	SDUM 18XD5 WCM.030208	✓	18	25	34	165	90	110	55	
SM17511	SDUM 19XD5 WCM.030208	✓	19	25	34	170	95	115	55	
SM17542	SDUM 20XD5 WCM.040208	✓	20	25	34	175	100	120	55	WCM. 040208
SM17559	SDUM 21XD5 WCM.040208	✓	21	25	34	180	105	125	55	
SM17566	SDUM 22XD5 WCM.040208	✓	22	25	34	185	110	130	55	
SM17603	SDUM 23XD5 WCM.040208	✓	23	25	34	190	115	135	55	
SM17610	SDUM 24XD5 WCM.050308	✓	24	25	34	195	120	140	55	WCM. 050308
SM17627	SDUM 25XD5 WCM.050308	✓	25	25	34	200	125	145	55	
SM17634	SDUM 26XD5 WCM.050308	✓	26	25	34	205	130	150	55	
SM17641	SDUM 27XD5 WCM.050308	✓	27	25	34	210	135	155	55	
SM17702	SDUM 28XD5 WCM.050308	✓	28	25	34	215	140	160	55	
SM17719	SDUM 29XD5 WCM.050308	✓	29	25	34	220	145	165	55	
SM17733	SDUM 30XD5 WCM.06T308	✓	30	32	44	231	150	171	60	WCM. 06T308
SM26162	SDUM 31XD5 WCM.06T308	✓	31	32	44	236	155	176	60	
SM26179	SDUM 32XD5 WCM.06T308	✓	32	32	44	241	160	181	60	
SM26186	SDUM 33XD5 WCM.06T308	✓	33	32	44	246	165	186	60	
SM26193	SDUM 34XD5 WCM.06T308	✓	34	32	44	251	170	191	60	
SM26209	SDUM 35XD5 WCM.06T308	✓	35	32	44	256	175	196	60	
SM26216	SDUM 36XD5 WCM.06T308	✓	36	32	44	261	180	201	60	
SM26223	SDUM 37XD5 WCM.06T308	✓	37	32	44	266	185	206	60	
SM26230	SDUM 38XD5 WCM.06T308	✓	38	32	44	271	190	211	60	
SM26247	SDUM 39XD5 WCM.06T308	✓	39	32	44	276	195	216	60	
SM26254	SDUM 40XD5 WCM.06T308	✓	40	32	44	281	200	221	60	

Hole tolerance is given for average conditions and may vary depending on machine rigidity, insert, and operating parameters.
Delik tolerans değerleri ortalama çalışma koşulları esas alınarak belirlenmiş olup, makine kapasitesi ve kullanılan kesici elmas özelliklerine göre farklılık gösterebilir

Size Designation	Master Insert*	Spare Parts		
		Screw	Torx Key	Screw Torque Value N·m
D16 - D23	WCM. 030208	SSV M2.5x6-9505	STK-T08-9908	1,0
	WCM. 040208			
D24 - D29	WCM. 050308	SSV M3x8-9508		1,9
D30 - D40	WCM. 06T308	SSV M3.5x9-SC-9544	STK-T10-9909	2,7

*Suitable Insert is ISO

www.smoxh.com.tr

U-Drills & MultiCut

J

- **U** Drills
- **Multi**Cut
- **Eccentric** Sleeve

Rising Power of Quality

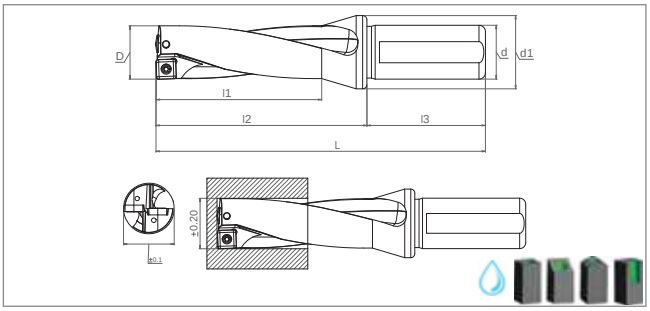

Ordering Code	Item Designation	Dimensions (mm)								Master Insert*
	SDUM Dx3 - 880 0202 / 0303 / 0404 / 0505 / 0606 U-DRILL	POWER SERIES	*D*	*d*	*d1*	*L*	*l1*	*l2*	*l3*	
SM66144	SDUM 14xD3 880-0202	✓	14	20	25	110	42	60	50	880-02
SM66151	SDUM 14.5xD3 880-0202	✓	14.5	20	25	113	45	63	50	
SM66168	SDUM 15xD3 880-0202	✓	15	20	25	113	45	63	50	
SM66175	SDUM 15.5xD3 880-0202	✓	15.5	20	25	118	48	68	50	
SM66182	SDUM 16xD3 880-0202	✓	16	25	34	124	48	69	55	
SM66199	SDUM 16.5xD3 880-0303	✓	16.5	25	34	127	51	72	55	880-03
SM66205	SDUM 17xD3 880-0303	✓	17	25	34	127	51	72	55	
SM66212	SDUM 17.5xD3 880-0303	✓	17.5	25	34	131	54	76	55	
SM66229	SDUM 18xD3 880-0303	✓	18	25	34	131	54	76	55	
SM66236	SDUM 18.5xD3 880-0303	✓	18.5	25	34	134	57	79	55	
SM66243	SDUM 19xD3 880-0303	✓	19	25	34	134	57	79	55	
SM66250	SDUM 19.5xD3 880-0303	✓	19.5	25	34	139	60	84	55	
SM66267	SDUM 20xD3 880-0404	✓	20	25	34	139	60	84	55	880-04
SM66274	SDUM 20.5xD3 880-0404	✓	20.5	25	34	142	63	87	55	
SM66281	SDUM 21xD3 880-0404	✓	21	25	34	142	63	87	55	
SM66298	SDUM 21.5xD3 880-0404	✓	21.5	25	34	145	66	89	55	
SM66304	SDUM 22xD3 880-0404	✓	22	25	34	145	66	89	55	
SM66311	SDUM 22.5xD3 880-0404	✓	22.5	25	34	150	69	95	55	
SM66328	SDUM 23xD3 880-0404	✓	23	25	34	150	69	95	55	
SM66335	SDUM 23.5xD3 880-0404	✓	23.5	25	34	154	72	99	55	
SM66342	SDUM 24xD3 880-0505	✓	24	25	34	154	72	99	55	880-05
SM66359	SDUM 24.5xD3 880-0505	✓	24.5	25	34	158	75	103	55	
SM66366	SDUM 25xD3 880-0505	✓	25	25	34	158	75	103	55	
SM66373	SDUM 26xD3 880-0505	✓	26	25	34	161	78	106	55	
SM66380	SDUM 27xD3 880-0505	✓	27	25	34	164	81	109	55	
SM66397	SDUM 28xD3 880-0505	✓	28	25	34	168	84	113	55	
SM66403	SDUM 29xD3 880-0505	✓	29	25	34	171	87	116	55	
SM66410	SDUM 30xD3 880-0606	✓	30	32	44	171	90	111	60	880-06

Hole tolerance is given for average conditions and may vary depending on machine rigidity, insert, and operating parameters.

Delik tolerans değerleri ortalama çalışma koşulları esas alınarak belirlenmiş olup, makine kapasitesi ve kullanılan kesici elmas özelliklerine göre farklılık gösterebilir

Size Designation	Master Insert*	Spare Parts		
		Screw	Torx Key	Screw Torque Value N·m
D14 - D16	880-02	SSV M2x4-9521	STK-T06-9906	0,4
D16.5 - D19.5	880-03	SSV M2.2x5-9503		0,65
D20 - D23.5	880-04	SSV M2.5x6-9505	STK-T08-9908	1,0
D24 - D29	880-05	SSV M3x8-9508		1,9
D30	880-06	SSV M3.5x9-SC-9544	STK-T10-9909	2,7

*Suitable Insert brand is SNDVK

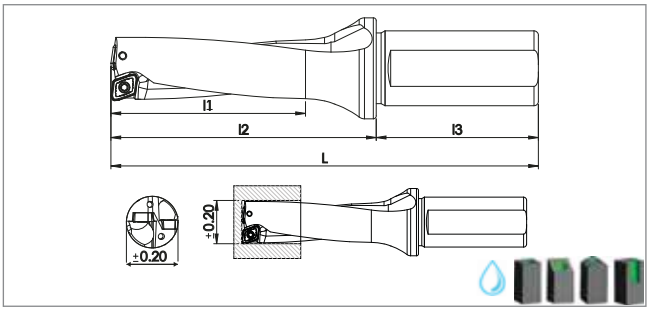

Ordering Code	Item Designation	Dimensions (mm)								Master Insert*
	SDUM Dx3 - XPMT 0502 / 06X3 / 07H3 / 08T3 U-DRILL	POWER SERIES	*D*	*d*	*d1*	*L*	*l1*	*l2*	*l3*	
SM68612	SDUM 15xD3 XPMT05	✓	15	20	25	113	45	63	50	XPMT 0502
SM68629	SDUM 15.5xD3 XPMT05	✓	15.5	20	25	118	48	68	50	
SM68636	SDUM 16xD3 XPMT05	✓	16	25	34	124	48	69	55	
SM68643	SDUM 16.5xD3 XPMT05	✓	16.5	25	34	127	51	72	55	
SM68650	SDUM 17xD3 XPMT05	✓	17	25	34	127	51	72	55	
SM68667	SDUM 17.5xD3 XPMT06	✓	17.5	25	34	131	54	76	55	XPMT 06X3
SM68674	SDUM 18xD3 XPMT06	✓	18	25	34	131	54	76	55	
SM68681	SDUM 18.5xD3 XPMT06	✓	18.5	25	34	134	57	79	55	
SM68698	SDUM 19xD3 XPMT06	✓	19	25	34	134	57	79	55	
SM68704	SDUM 19.5xD3 XPMT06	✓	19.5	25	34	139	60	84	55	
SM68711	SDUM 20xD3 XPMT06	✓	20	25	34	139	60	84	55	
SM68728	SDUM 20.5xD3 XPMT06	✓	20.5	25	34	142	63	87	55	
SM68735	SDUM 21xD3 XPMT06	✓	21	25	34	142	63	87	55	
SM68742	SDUM 21.5xD3 XPMT06	✓	21.5	25	34	145	66	89	55	
SM68759	SDUM 22xD3 XPMT07	✓	22	25	34	145	66	89	55	XPMT 07H3
SM68766	SDUM 22.5xD3 XPMT07	✓	22.5	25	34	150	69	95	55	
SM68773	SDUM 23xD3 XPMT07	✓	23	25	34	150	69	95	55	
SM68780	SDUM 23.5xD3 XPMT07	✓	23.5	25	34	154	72	99	55	
SM68797	SDUM 24xD3 XPMT07	✓	24	25	34	154	72	99	55	
SM68803	SDUM 24.5xD3 XPMT07	✓	24.5	25	34	158	75	103	55	
SM68810	SDUM 25xD3 XPMT07	✓	25	25	34	158	75	103	55	
SM68827	SDUM 26xD3 XPMT07	✓	26	25	34	161	78	106	55	
SM68834	SDUM 27xD3 XPMT08	✓	27	25	34	164	81	109	55	XPMT 08T3
SM68841	SDUM 28xD3 XPMT08	✓	28	25	34	168	84	113	55	
SM68858	SDUM 29xD3 XPMT08	✓	29	25	34	171	87	116	55	
SM68865	SDUM 30xD3 XPMT08	✓	30	32	44	171	90	111	60	
SM68872	SDUM 31xD3 XPMT08	✓	31	32	44	175	93	115	60	
SM68889	SDUM 32xD3 XPMT08	✓	32	32	44	178	96	118	60	

Hole tolerance is given for average conditions and may vary depending on machine rigidity, insert, and operating parameters.

Delik tolerans değerleri ortalama çalışma koşulları esas alınarak belirlenmiş olup, makine kapasitesi ve kullanılan kesici elmas özelliklerine göre farklılık gösterebilir

Size Designation	Master Insert*	Spare Parts		
		Screw	Torx Key	Screw Torque Value N·m
D15 - D17	XPMT 0502	SSV M2x4-9521	STK-T06-9906	0,4
D17.5 - D21.5	XPMT 06X3	SSV M2.2x6-9549		0,65
D22 - D26	XPMT 07H3	SSV M2.5x6-9505	STK-T08-9908	1,0
D27 - D32	XPMT 08T3	SSV M3x8-9508		1,9

*Suitable Insert brand is TNGLY

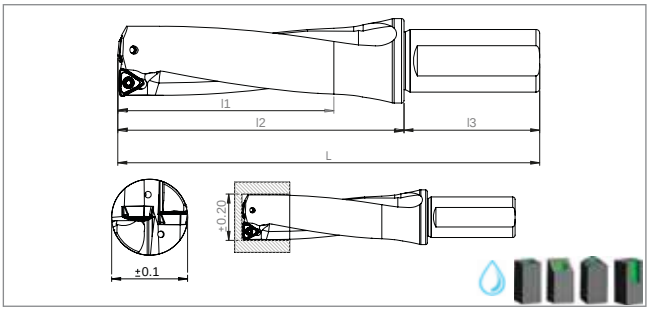

Ordering Code	Item Designation	Dimensions (mm)								Master Insert*
	SDUM Dx3 - WWMU 05X205 / 060306R/ 08X408 U-DRILL	POWER SERIES	*D*	*d*	*d1*	*L*	*l1*	*l2*	*l3*	
SM68896	SDUM 20xD3 WW05	✓	20	25	34	139	60	84	55	WWMU 05X205
SM68902	SDUM 21xD3 WW05	✓	21	25	34	142	63	87	55	
SM68919	SDUM 21.5xD3 WW05	✓	21.5	25	34	145	66	89	55	
SM68926	SDUM 22xD3 WW05	✓	22	25	34	145	66	89	55	
SM68933	SDUM 23xD3 WW05	✓	23	25	34	150	69	95	55	
SM68940	SDUM 24xD3 WW06	✓	24	25	34	154	72	99	55	WWMU 060306
SM68957	SDUM 25xD3 WW06	✓	25	25	34	158	75	103	55	
SM68964	SDUM 26xD3 WW06	✓	26	25	34	161	78	106	55	
SM68971	SDUM 27xD3 WW06	✓	27	25	34	164	81	109	55	
SM68988	SDUM 28xD3 WW08	✓	28	25	34	168	84	113	55	WWMU 08X408
SM68995	SDUM 29xD3 WW08	✓	29	25	34	171	87	116	55	
SM69008	SDUM 30xD3 WW08	✓	30	32	44	171	90	111	60	
SM69015	SDUM 31xD3 WW08	✓	31	32	44	175	93	115	60	
SM69022	SDUM 32xD3 WW08	✓	32	32	44	178	96	118	60	

Hole tolerance is given for average conditions and may vary depending on machine rigidity, insert, and operating parameters.

Delik tolerans değerleri ortalama çalışma koşulları esas alınarak belirlenmiş olup, makine kapasitesi ve kullanılan kesici elmas özelliklerine göre farklılık gösterebilir

Size Designation	Master Insert*	Spare Parts		
		Screw	Torx Key	Screw Torque Value N·m
D20 - D23	WWMU 05X205	SSV M2.2x5-9503	STK-T06-9906	0,65
D24 - D27	WWMU 060306	SSV M2.5x6-9505	STK-T08-9908	1,0
D28 - D32	WWMU 08X408	SSV M3x8-9508		1,9

*Suitable Insert brand is TNGLY

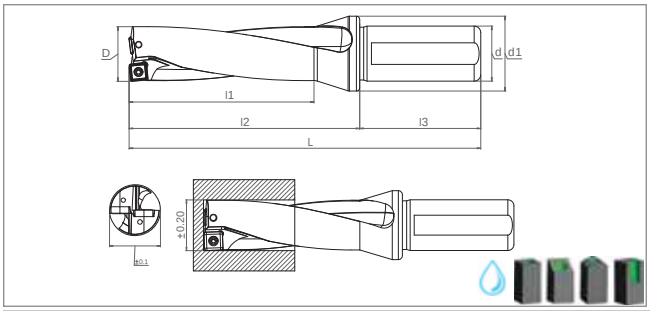

Ordering Code	Item Designation	Dimensions (mm)								Master Insert*
	SDUM Dx3 - SOMX 052704/063005/073505/084005/094506 U-DRILL	POWER SERIES	*D*	*d*	*d1*	*L*	*l1*	*l2*	*l3*	
SM69039	SDUM 14xD3 SOMX0527	✓	14	20	25	110	42	60	50	SOMX 052704
SM69046	SDUM 14.5xD3 SOMX0527	✓	14.5	20	25	113	45	63	50	
SM69053	SDUM 15xD3 SOMX0527	✓	15	20	25	113	45	63	50	
SM69060	SDUM 15.5xD3 SOMX0527	✓	15.5	20	25	118	48	68	50	
SM69077	SDUM 16xD3 SOMX0527	✓	16	25	34	124	48	69	55	
SM69084	SDUM 16.5xD3 SOMX0527	✓	16.5	25	34	127	51	72	55	
SM69091	SDUM 17xD3 SOMX0630	✓	17	25	34	127	51	72	55	SOMX 063005
SM69107	SDUM 17.5xD3 SOMX0630	✓	17.5	25	34	131	54	76	55	
SM69114	SDUM 18xD3 SOMX0630	✓	18	25	34	131	54	76	55	
SM69121	SDUM 18.5xD3 SOMX0630	✓	18.5	25	34	134	57	79	55	
SM69138	SDUM 19xD3 SOMX0630	✓	19	25	34	134	57	79	55	
SM69145	SDUM 19.5xD3 SOMX0630	✓	19.5	25	34	139	60	84	55	
SM69152	SDUM 20xD3 SOMX0735	✓	20	25	34	139	60	84	55	SOMX 073505
SM69169	SDUM 20.5xD3 SO.0735	✓	20.5	25	34	142	63	87	55	
SM69176	SDUM 21xD3 SOMX0735	✓	21	25	34	142	63	87	55	
SM69183	SDUM 21.5xD3 SOMX0735	✓	21.5	25	34	145	66	89	55	
SM69190	SDUM 22xD3 SOMX0735	✓	22	25	34	145	66	89	55	
SM69206	SDUM 22.5xD3 SOMX0735	✓	22.5	25	34	150	69	95	55	
SM69213	SDUM 23xD3 SOMX0840	✓	23	25	34	150	69	95	55	SOMX 084005
SM69220	SDUM 23.5xD3 SOMX0840	✓	23.5	25	34	154	72	99	55	
SM69237	SDUM 24xD3 SOMX0840	✓	24	25	34	154	72	99	55	
SM69244	SDUM 24.5xD3 SOMX0840	✓	24.5	25	34	158	75	103	55	
SM69251	SDUM 25xD3 SOMX0840	✓	25	25	34	158	75	103	55	
SM69268	SDUM 26xD3 SOMX0840	✓	26	25	34	161	78	106	55	
SM69275	SDUM 27xD3 SOMX0840	✓	27	25	34	164	81	109	55	
SM69282	SDUM 28xD3 SOMX0945	✓	28	25	34	168	84	113	55	SOMX 094506
SM69299	SDUM 29xD3 SOMX0945	✓	29	25	34	171	87	116	55	
SM69305	SDUM 30xD3 SOMX0945	✓	30	32	44	171	90	111	60	
SM69312	SDUM 31xD3 SOMX0945	✓	31	32	44	175	93	115	60	
SM69329	SDUM 32xD3 SOMX0945	✓	32	32	44	178	96	118	60	
SM69336	SDUM 33xD3 SOMX0945	✓	33	32	44	182	99	122	60	

Size Designation	Master Insert*	Spare Parts		
		Screw	Torx Key	Screw Torque Value
				N·m
D14 - D16.5	SOMX 052704	SSV M2x4-9521	STK-T06-9906	0,4
D17 - D19.5	SOMX 063005	SSV M2.5x5-9504	STK-T08-9908	1,0
D20 - D22.5	SOMX 073505	SSV M3x6-9507		1,9
D23 - D27	SOMX 084005	SSV M3.5x8-SC-9513	STK-T10-9909	2,7
D28 - D33	SOMX 094506	SSV M4x9-9542	STK-T15-9910	3,9

*Suitable Insert brand is MTSBSH

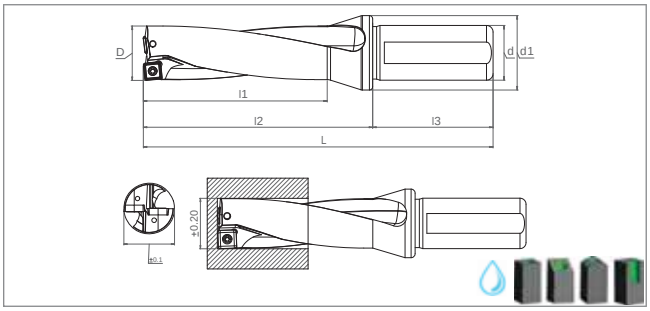

Ordering Code	Item Designation	Dimensions (mm)								Master Insert*
	SDUM Dx2 - SPMG 050204 / 060204 / 07T308 U-DRILL	POWER SERIES	*D*	*d*	*d1*	*L*	*l1*	*l2*	*l3*	
SM19294	SDUM 12.5XD2 SPMG 050204	✓	12.5	20	25	94	26	44	50	SPMG 050204
SM19232	SDUM 13XD2 SPMG 050204	✓	13	20	25	94	26	44	50	
SM19249	SDUM 13.5XD2 SPMG 050204	✓	13.5	20	25	96	28	46	50	
SM19256	SDUM 14XD2 SPMG 050204	✓	14	20	25	96	28	46	50	
SM19263	SDUM 14.5XD2 SPMG 050204	✓	14.5	20	25	99	30	49	50	
SM19270	SDUM 15XD2 SPMG 050204	✓	15	20	25	99	30	49	50	
SM19287	SDUM 15.5XD2 SPMG 060204	✓	15.5	20	25	102	32	52	50	SPMG 060204
SM18082	SDUM 16XD2 SPMG 060204	✓	16	25	34	108	32	53	55	
SM18099	SDUM 16.5XD2 SPMG 060204	✓	16.5	25	34	110	34	55	55	
SM18105	SDUM 17XD2 SPMG 060204	✓	17	25	34	110	34	55	55	
SM18112	SDUM 17.5XD2 SPMG 060204	✓	17.5	25	34	113	36	58	55	
SM18129	SDUM 18XD2 SPMG 060204	✓	18	25	34	113	36	58	55	
SM18136	SDUM 18.5XD2 SPMG 060204	✓	18.5	25	34	115	38	60	55	
SM18143	SDUM 19XD2 SPMG 060204	✓	19	25	34	115	38	60	55	
SM18150	SDUM 19.5XD2 SPMG 060204	✓	19.5	25	34	119	40	64	55	
SM18501	SDUM 20XD2 SPMG 060204	✓	20	25	34	119	40	64	55	
SM19300	SDUM 20.5XD2 SPMG 060204	✓	20.5	25	34	121	42	66	55	
SM18518	SDUM 21XD2 SPMG 060204	✓	21	25	34	121	42	66	55	
SM19317	SDUM 21.5XD2 SPMG 060204	✓	21.5	25	34	123	44	68	55	
SM18525	SDUM 22XD2 SPMG 07T308	✓	22	25	34	123	44	68	55	SPMG 07T308
SM19324	SDUM 22.5XD2 SPMG 07T308	✓	22.5	25	34	127	46	72	55	
SM18532	SDUM 23XD2 SPMG 07T308	✓	23	25	34	127	46	72	55	
SM19331	SDUM 23.5XD2 SPMG 07T308	✓	23.5	25	34	130	48	75	55	
SM18549	SDUM 24XD2 SPMG 07T308	✓	24	25	44	130	48	75	55	
SM18488	SDUM 24.5XD2 SPMG 07T308	✓	24.5	25	44	133	50	78	55	
SM18556	SDUM 25XD2 SPMG 07T308	✓	25	25	44	133	50	78	55	
SM19461	SDUM 25.5XD2 SPMG 07T308	✓	25.5	25	44	135	52	80	55	
SM18570	SDUM 26XD2 SPMG 07T308	✓	26	25	44	135	52	80	55	
SM19591	SDUM 26.5XD2 SPMG 07T308	✓	26.5	25	44	137	54	82	55	
SM18563	SDUM 27XD2 SPMG 07T308	✓	27	25	44	137	54	82	55	
SM19607	SDUM 27.5XD2 SPMG 07T308	✓	27.5	25	44	140	56	85	55	

Hole tolerance is given for average conditions and may vary depending on machine rigidity, insert, and operating parameters.

Delik tolerans değerleri ortalama çalışma koşulları esas alınarak belirlenmiş olup, makine kapasitesi ve kullanılan kesici elmas özelliklerine göre farklılık gösterebilir

Size Designation	Master Insert*	Spare Parts		
		Screw	Torx Key	Screw Torque Value N·m
D12.5 - D15	SPMG 050204	SSV M2x4-9521	STK-T06-9906	0,4
D15.5 - D21.5	SPMG 060204	SSV M2.2x5-9503		0,65
D22 - D27.5	SPMG 07T308	SSV M2.5x7-9506	STK-T08-9908	1,0

Continued on next page Devamı sonraki sayfada

*Suitable Insert brand is TGTC

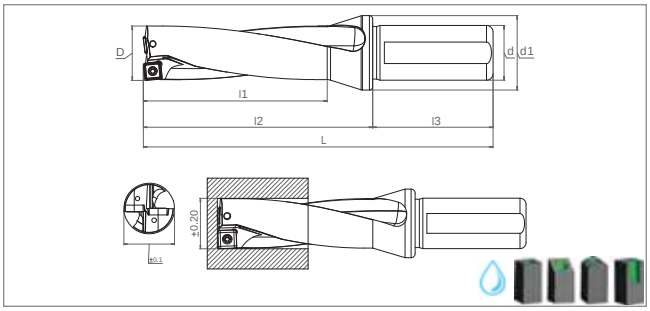

Ordering Code	Item Designation	Dimensions (mm)								Master Insert*
	SDUM Dx2 - SPMG 090408 / 110408 / 140512 U-DRILL	POWER SERIES	*D*	*d*	*d1*	*L*	*l1*	*l2*	*l3*	
SM18587	SDUM 28XD2 SPMG 090408	✓	28	25	44	140	56	85	55	SPMG 090408
SM19614	SDUM 28.5XD2 SPMG 090408	✓	28.5	25	44	142	58	87	55	
SM18594	SDUM 29XD2 SPMG 090408	✓	29	25	44	142	58	87	55	
SM18600	SDUM 29.5XD2 SPMG 090408	✓	29.5	25	44	151	60	96	55	
SM18785	SDUM 30XD2 SPMG 090408	✓	30	32	44	141	60	81	60	
SM18792	SDUM 31XD2 SPMG 090408	✓	31	32	44	144	62	84	60	
SM18808	SDUM 32XD2 SPMG 090408	✓	32	32	44	146	64	86	60	
SM18815	SDUM 33XD2 SPMG 090408	✓	33	32	44	149	66	89	60	
SM18716	SDUM 34XD2 SPMG 110408	✓	34	32	44	151	68	91	60	SPMG 110408
SM18723	SDUM 35XD2 SPMG 110408	✓	35	32	44	154	70	94	60	
SM18730	SDUM 36XD2 SPMG 110408	✓	36	32	44	157	72	97	60	
SM18747	SDUM 37XD2 SPMG 110408	✓	37	32	44	160	74	100	60	
SM18754	SDUM 38XD2 SPMG 110408	✓	38	32	44	163	76	103	60	
SM18761	SDUM 39XD2 SPMG 110408	✓	39	32	44	165	78	105	60	
SM18778	SDUM 40XD2 SPMG 110408	✓	40	32	44	168	80	108	60	
SM19058	SDUM 41XD2 SPMG 110408	✓	41	32	44	171	82	111	60	
SM19065	SDUM 42XD2 SPMG 140512	✓	42	32	44	173	84	113	60	SPMG 140512
SM19089	SDUM 43XD2 SPMG 140512	✓	43	32	44	176	86	116	60	
SM19072	SDUM 44XD2 SPMG 140512	✓	44	32	44	178	88	118	60	
SM19621	SDUM 45XD2 SPMG 140512	✓	45	40	60	192	90	122	70	
SM19638	SDUM 46XD2 SPMG 140512	✓	46	40	60	195	92	125	70	
SM19645	SDUM 47XD2 SPMG 140512	✓	47	40	60	197	94	127	70	
SM19652	SDUM 48XD2 SPMG 140512	✓	48	40	60	200	96	130	70	
SM19683	SDUM 49XD2 SPMG 140512	✓	49	40	60	202	98	132	70	
SM19690	SDUM 50XD2 SPMG 140512	✓	50	40	60	205	100	135	70	

Hole tolerance is given for average conditions and may vary depending on machine rigidity, insert, and operating parameters.
Delik tolerans değerleri ortalama çalışma koşulları esas alınarak belirlenmiş olup, makine kapasitesi ve kullanılan kesici elmas özelliklerine göre farklılık gösterebilir

Size Designation	Master Insert*	Spare Parts		
		Screw	Torx Key	Screw Torque Value N·m
D28 - D33	SPMG 090408	SSV M3.5x8-9510	STK-T15-9910	2,7
D34 - D41	SPMG 110408	SSV M4x10-9514		3,9
D42 - D50	SPMG 140512	SSV M5x13-9519	STK-T20-9911	5,5

*Suitable Insert brand is TGTC

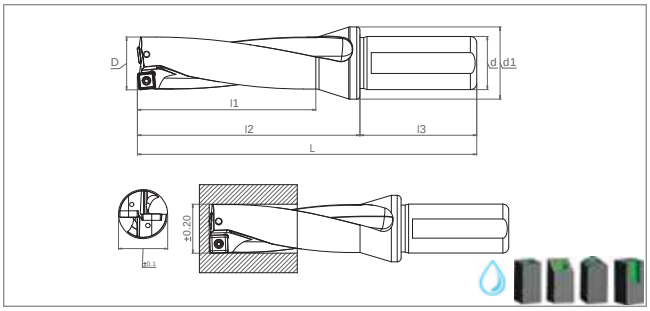

Ordering Code	Item Designation	Dimensions (mm)								Master Insert*
	SDUM Dx3 - SPMG 050204 / 060204 / 07T308 U-DRILL	POWER SERIES	*D*	*d*	*d1*	*L*	*l1*	*l2*	*l3*	
SM18846	SDUM 12.5XD3 SPMG 050204	✓	12.5	20	25	107	39	57	50	SPMG 050204
SM18853	SDUM 13XD3 SPMG 050204	✓	13	20	25	107	39	57	50	
SM18860	SDUM 13.5XD3 SPMG 050204	✓	13.5	20	25	110	42	60	50	
SM18877	SDUM 14XD3 SPMG 050204	✓	14	20	25	110	42	60	50	
SM18884	SDUM 14.5XD3 SPMG 050204	✓	14.5	20	25	113	45	63	50	
SM18891	SDUM 15XD3 SPMG 050204	✓	15	20	25	113	45	63	50	
SM18907	SDUM 15.5XD3 SPMG 060204	✓	15.5	20	25	118	48	68	50	SPMG 060204
SM18013	SDUM 16XD3 SPMG 060204	✓	16	25	34	124	48	69	55	
SM18167	SDUM 16.5XD3 SPMG 060204	✓	16.5	25	34	127	51	72	55	
SM18020	SDUM 17XD3 SPMG 060204	✓	17	25	34	127	51	72	55	
SM18174	SDUM 17.5XD3 SPMG 060204	✓	17.5	25	34	131	54	76	55	
SM18037	SDUM 18XD3 SPMG 060204	✓	18	25	34	131	54	76	55	
SM18181	SDUM 18.5XD3 SPMG 060204	✓	18.5	25	34	134	57	79	55	
SM18044	SDUM 19XD3 SPMG 060204	✓	19	25	34	134	57	79	55	
SM18198	SDUM 19.5XD3 SPMG 060204	✓	19.5	25	34	139	60	84	55	
SM18617	SDUM 20XD3 SPMG 060204	✓	20	25	34	139	60	84	55	
SM18921	SDUM 20.5XD3 SPMG 060204	✓	20.5	25	34	142	63	87	55	
SM18624	SDUM 21XD3 SPMG 060204	✓	21	25	34	142	63	87	55	
SM18914	SDUM 21.5XD3 SPMG 060204	✓	21.5	25	34	145	66	90	55	
SM18655	SDUM 22XD3 SPMG 07T308	✓	22	25	34	145	66	90	55	SPMG 07T308
SM18945	SDUM 22.5XD3 SPMG 07T308	✓	22.5	25	34	150	69	95	55	
SM18648	SDUM 23XD3 SPMG 07T308	✓	23	25	34	150	69	95	55	
SM18938	SDUM 23.5XD3 SPMG 07T308	✓	23.5	25	34	154	72	99	55	
SM18631	SDUM 24XD3 SPMG 07T308	✓	24	25	34	154	72	99	55	
SM18495	SDUM 24.5XD3 SPMG 07T308	✓	24.5	25	34	158	75	103	55	
SM18662	SDUM 25XD3 SPMG 07T308	✓	25	25	34	158	75	103	55	
SM18051	SDUM 25.5XD3 SPMG 07T308	✓	25.5	25	34	161	78	106	55	
SM18686	SDUM 26XD3 SPMG 07T308	✓	26	25	34	161	78	106	55	
SM18068	SDUM 26.5XD3 SPMG 07T308	✓	26.5	25	34	164	81	109	55	
SM18679	SDUM 27XD3 SPMG 07T308	✓	27	25	34	164	81	109	55	
SM18075	SDUM 27.5XD3 SPMG 07T308	✓	27.5	25	34	168	84	113	55	

Hole tolerance is given for average conditions and may vary depending on machine rigidity, insert, and operating parameters.

Delik tolerans değerleri ortalama çalışma koşulları esas alınarak belirlenmiş olup, makine kapasitesi ve kullanılan kesici elmas özelliklerine göre farklılık gösterebilir

Size Designation	Master Insert*	Spare Parts		
		Screw	Torx Key	Screw Torque Value N·m
D12.5 - D15	SPMG 050204	SSV M2x4-9521	STK-T06-9906	0,4
D15.5 - D21.5	SPMG 060204	SSV M2.2x5-9503		0,65
D22 - D27.5	SPMG 07T308	SSV M2.5x7-9506	STK-T08-9908	1,0

Continued on next page / Devamı sonraki sayfada

*Suitable Insert brand is TGTC

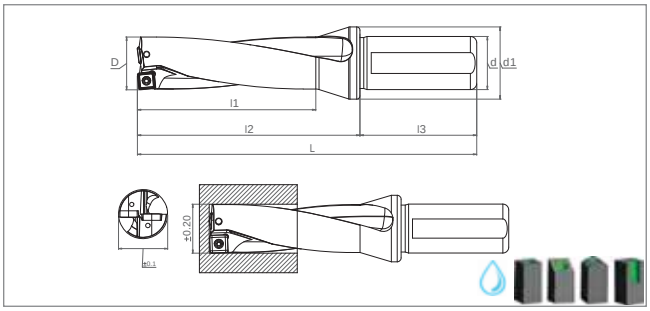

Ordering Code	Item Designation	Dimensions (mm)								Master Insert*
	SDUM Dx3 - SPMG 090408 / 110408 / 140512 U-DRILL	POWER SERIES	*D*	*d*	*d1*	*L*	*l1*	*l2*	*l3*	
SM18709	SDUM 28XD3 SPMG 090408	✓	28	25	34	168	84	113	55	SPMG 090408
SM18822	SDUM 28.5XD3 SPMG 090408	✓	28.5	25	34	171	87	116	55	
SM18693	SDUM 29XD3 SPMG 090408	✓	29	25	34	171	87	116	55	
SM18839	SDUM 29.5XD3 SPMG 090408	✓	29.5	25	34	177	90	122	55	
SM19041	SDUM 30XD3 SPMG 090408	✓	30	32	44	171	90	111	60	
SM79465	**SDUM 30.5XD3 SPMG 090408**	✓	**30**	**32**	**44**	**175**	**90**	**111**	**60**	
SM19133	SDUM 31XD3 SPMG 090408	✓	31	32	44	175	93	115	60	
SM19027	SDUM 32XD3 SPMG 090408	✓	32	32	44	178	96	118	60	
SM19034	SDUM 33XD3 SPMG 090408	✓	33	32	44	182	99	122	60	
SM18952	SDUM 34XD3 SPMG 110408	✓	34	32	44	185	102	125	60	SPMG 110408
SM18969	SDUM 35XD3 SPMG 110408	✓	35	32	44	189	105	129	60	
SM79472	**SDUM 35.5XD3 SPMG 110408**	✓	**35**	**32**	**44**	**193**	**105**	**129**	**60**	
SM18976	SDUM 36XD3 SPMG 110408	✓	36	32	44	193	108	133	60	
SM18983	SDUM 37XD3 SPMG 110408	✓	37	32	44	197	111	137	60	
SM18990	SDUM 38XD3 SPMG 110408	✓	38	32	44	201	114	141	60	
SM19003	SDUM 39XD3 SPMG 110408	✓	39	32	44	204	117	144	60	
SM19010	SDUM 40XD3 SPMG 110408	✓	40	32	44	208	120	148	60	
SM79489	**SDUM 40.5XD3 SPMG 110408**	✓	**40**	**32**	**44**	**212**	**120**	**148**	**60**	
SM19096	SDUM 41XD3 SPMG 110408	✓	41	32	44	212	123	152	60	
SM19102	SDUM 42XD3 SPMG 140512	✓	42	32	44	215	126	155	60	SPMG 140512
SM19140	SDUM 43XD3 SPMG 140512	✓	43	32	44	219	129	159	60	
SM19157	SDUM 44XD3 SPMG 140512	✓	44	32	44	222	132	162	60	
SM19164	SDUM 45XD3 SPMG 140512	✓	45	40	60	237	135	167	70	
SM19171	SDUM 46XD3 SPMG 140512	✓	46	40	60	241	138	171	70	
SM19188	SDUM 47XD3 SPMG 140512	✓	47	40	60	244	141	174	70	
SM19195	SDUM 48XD3 SPMG 140512	✓	48	40	60	248	144	178	70	
SM19201	SDUM 49XD3 SPMG 140512	✓	49	40	60	251	147	181	70	
SM19218	SDUM 50XD3 SPMG 140512	✓	50	40	60	255	150	185	70	
SM19225	SDUM 51XD3 SPMG 140512	✓	51	40	60	258	153	188	70	
SM19454	SDUM 52XD3 SPMG 140512	✓	52	40	60	261	156	191	70	

Hole tolerance is given for average conditions and may vary depending on machine rigidity, insert, and operating parameters.

Delik tolerans değerleri ortalama çalışma koşulları esas alınarak belirlenmiş olup, makine kapasitesi ve kullanılan kesici elmas özelliklerine göre farklılık gösterebilir

Size Designation	Master Insert*	Spare Parts		
		Screw	Torx Key	Screw Torque Value N·m
D28 - D33	SPMG 090408	SSV M3.5x8-9510	STK-T15-9910	2,7
D34 - D41	SPMG 110408	SSV M4x10-9514		3,9
D42 - D54	SPMG 140512	SSV M5x13-9519	STK-T20-9911	5,5

*Suitable Insert brand is TGTC

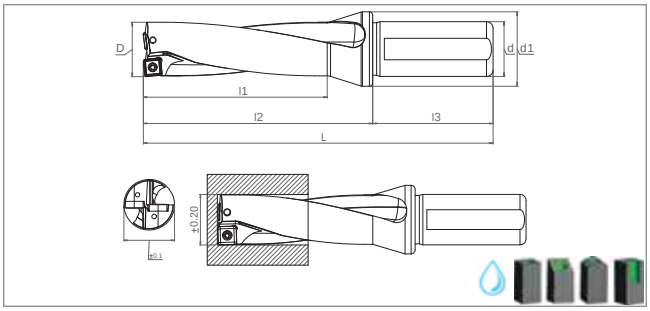

Ordering Code	Item Designation	Dimensions (mm)								Master Insert*
	SDUM Dx4 - SPMG 050204 / 060204 / 07T308 U-DRILL	POWER SERIES	*D*	*d*	*d1*	*L*	*l1*	*l2*	*l3*	
SM25370	SDUM 12.5XD4 SPMG 050204	✓	12.5	20	25	120	52	70	50	SPMG 050204
SM18204	SDUM 13XD4 SPMG 050204	✓	13	20	25	120	52	70	50	
SM19744	SDUM 13.5XD4 SPMG 050204	✓	13.5	20	25	124	56	74	50	
SM18211	SDUM 14XD4 SPMG 050204	✓	14	20	25	124	56	74	50	
SM19751	SDUM 14.5XD4 SPMG 050204	✓	14.5	20	25	128	60	78	50	
SM18228	SDUM 15XD4 SPMG 050204	✓	15	20	25	128	60	78	50	
SM19768	SDUM 15.5XD4 SPMG 060204	✓	15.5	20	25	131	64	81	50	SPMG 060204
SM18235	SDUM 16XD4 SPMG 060204	✓	16	25	34	140	64	85	55	
SM19720	SDUM 16.5XD4 SPMG 060204	✓	16.5	25	34	144	68	89	55	
SM18242	SDUM 17XD4 SPMG 060204	✓	17	25	34	144	68	89	55	
SM19775	SDUM 17.5XD4 SPMG 060204	✓	17.5	25	34	149	72	94	55	
SM18259	SDUM 18XD4 SPMG 060204	✓	18	25	34	149	72	94	55	
SM19782	SDUM 18.5XD4 SPMG 060204	✓	18.5	25	34	153	76	98	55	
SM18266	SDUM 19XD4 SPMG 060204	✓	19	25	34	153	76	98	55	
SM19799	SDUM 19.5XD4 SPMG 060204	✓	19.5	25	34	159	80	104	55	
SM18273	SDUM 20XD4 SPMG 060204	✓	20	25	34	159	80	104	55	
SM19805	SDUM 20.5XD4 SPMG 060204	✓	20.5	25	34	163	84	108	55	
SM18280	SDUM 21XD4 SPMG 060204	✓	21	25	34	163	84	108	55	
SM19812	SDUM 21.5XD4 SPMG 060204	✓	21.5	25	34	167	88	112	55	
SM18297	SDUM 22XD4 SPMG 07T308	✓	22	25	34	167	88	112	55	SPMG 07T308
SM19829	SDUM 22.5XD4 SPMG 07T308	✓	22.5	25	34	173	92	118	55	
SM18303	SDUM 23XD4 SPMG 07T308	✓	23	25	34	173	92	118	55	
SM19836	SDUM 23.5XD4 SPMG 07T308	✓	23.5	25	34	178	96	123	55	
SM18310	SDUM 24XD4 SPMG 07T308	✓	24	25	34	178	96	123	55	
SM19843	SDUM 24.5XD4 SPMG 07T308	✓	24.5	25	34	183	100	128	55	
SM18327	SDUM 25XD4 SPMG 07T308	✓	25	25	34	183	100	128	55	
SM19737	SDUM 25.5XD4 SPMG 07T308	✓	25.5	25	34	187	104	132	55	
SM18334	SDUM 26XD4 SPMG 07T308	✓	26	25	34	187	104	132	55	
SM19850	SDUM 26.5XD4 SPMG 07T308	✓	26.5	25	34	191	108	136	55	
SM18341	SDUM 27XD4 SPMG 07T308	✓	27	25	34	191	108	136	55	
SM19867	SDUM 27.5XD4 SPMG 07T308	✓	27.5	25	34	196	112	141	55	

Hole tolerance is given for average conditions and may vary depending on machine rigidity, insert, and operating parameters.

Delik tolerans değerleri ortalama çalışma koşulları esas alınarak belirlenmiş olup, makine kapasitesi ve kullanılan kesici elmas özelliklerine göre farklılık gösterebilir

Size Designation	Master Insert*	Spare Parts		
		Screw	Torx Key	Screw Torque Value N·m
D12.5 - D15	SPMG 050204	SSV M2x4-9521	STK-T06-9906	0,4
D15.5 - D21.5	SPMG 060204	SSV M2.2x5-9503		0,65
D22 - D27.5	SPMG 07T308	SSV M2.5x7-9506	STK-T08-9908	1,0

Continued on next page / Devamı sonraki sayfada

*Suitable Insert brand is TGTC

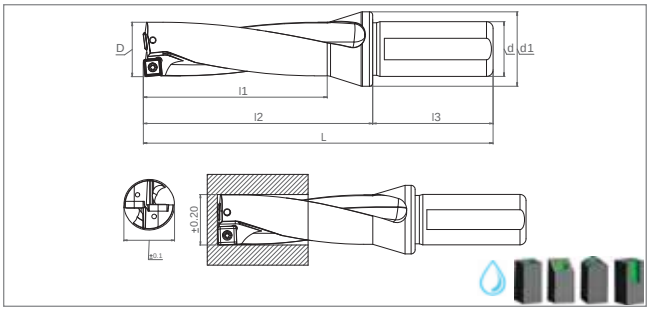

Ordering Code	Item Designation	Dimensions (mm)								Master Insert*
	SDUM Dx4 - SPMG 090408 / 110408 / 140512 U-DRILL	POWER SERIES	*D*	*d*	*d1*	*L*	*l1*	*l2*	*l3*	
SM18358	SDUM 28XD4 SPMG 090408	✓	28	25	34	196	112	141	55	SPMG 090408
SM19874	SDUM 28.5XD4 SPMG 090408	✓	28.5	25	34	200	116	145	55	
SM18372	SDUM 29XD4 SPMG 090408	✓	29	25	34	200	116	145	55	
SM19881	SDUM 29.5XD4 SPMG 090408	✓	29.5	25	34	202	120	147	55	
SM18365	SDUM 30XD4 SPMG 090408	✓	30	32	44	201	120	141	60	
SM18389	SDUM 31XD4 SPMG 090408	✓	31	32	44	206	124	146	60	
SM18396	SDUM 32XD4 SPMG 090408	✓	32	32	44	210	128	150	60	
SM18402	SDUM 33XD4 SPMG 090408	✓	33	32	44	215	132	155	60	
SM25417	SDUM 33.5XD4 SPMG 090408	✓	33.5	32	44	219	134	159	60	
SM18419	SDUM 34XD4 SPMG 110408	✓	34	32	44	219	136	159	60	SPMG 110408
SM18426	SDUM 35XD4 SPMG 110408	✓	35	32	44	224	140	164	60	
SM18433	SDUM 36XD4 SPMG 110408	✓	36	32	44	229	144	169	60	
SM18440	SDUM 37XD4 SPMG 110408	✓	37	32	44	234	148	174	60	
SM18457	SDUM 38XD4 SPMG 110408	✓	38	32	44	239	152	179	60	
SM20948	SDUM 38.5XD4 SPMG 110408	✓	38.5	32	44	243	154	183	60	
SM18464	SDUM 39XD4 SPMG 110408	✓	39	32	44	243	156	183	60	
SM18471	SDUM 40XD4 SPMG 110408	✓	40	32	44	248	160	188	60	
SM19119	SDUM 41XD4 SPMG 110408	✓	41	32	44	253	164	193	60	
SM19126	SDUM 42XD4 SPMG 140512	✓	42	32	44	257	168	197	60	SPMG 140512
SM19362	SDUM 43XD4 SPMG 140512	✓	43	32	44	262	172	202	60	
SM19379	SDUM 44XD4 SPMG 140512	✓	44	32	44	266	176	206	60	

Hole tolerance is given for average conditions and may vary depending on machine rigidity, insert, and operating parameters.

Delik tolerans değerleri ortalama çalışma koşulları esas alınarak belirlenmiş olup, makine kapasitesi ve kullanılan kesici elmas özelliklerine göre farklılık gösterebilir

Size Designation	Master Insert*	Spare Parts		
		Screw	Torx Key	Screw Torque Value N·m
D28 - D33	SPMG 090408	SSV M3.5x8-9510	STK-T15-9910	2,7
D34 - D41	SPMG 110408	SSV M4x10-9514		2,7
D42 - D44	SPMG 140512	SSV M5x13-9519	STK-T20-9911	5,5

*Suitable Insert brand is TGTC

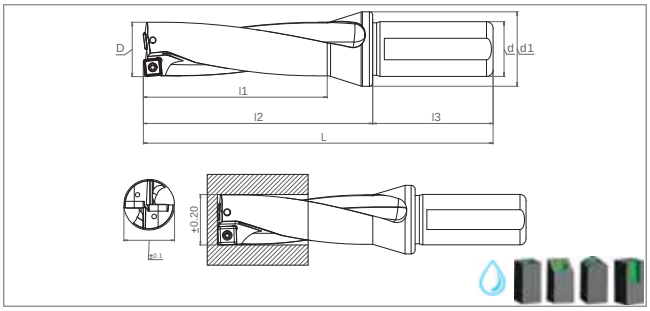

Ordering Code	Item Designation	Dimensions (mm)								Master Insert*
	SDUM Dx5 - SPMG 050204 / 060204 / 07T308 / 090408 U-DRILL	POWER SERIES	*D*	*d*	*d1*	*L*	*l1*	*l2*	*l3*	
SM19676	SDUM 13XD5 SPMG 050204	✓	13	20	25	130	65	80	50	SPMG 050204
SM19669	SDUM 14XD5 SPMG 050204	✓	14	20	25	135	70	85	50	
SM18006	SDUM 15XD5 SPMG 050204	✓	15	20	25	140	75	90	50	
SM19348	SDUM 16XD5 SPMG 060204	✓	16	25	34	155	80	100	55	SPMG 060204
SM79496	**SDUM 16.5XD5 SPMG 060204**	✓	**16**	**25**	**34**	**160**	**85**	**105**	**55**	
SM19478	SDUM 17XD5 SPMG 060204	✓	17	25	34	160	85	105	55	
SM19485	SDUM 18XD5 SPMG 060204	✓	18	25	34	165	90	110	55	
SM19492	SDUM 19XD5 SPMG 060204	✓	19	25	34	170	95	115	55	
SM19508	SDUM 20XD5 SPMG 060204	✓	20	25	34	175	100	120	55	
SM79502	**SDUM 20.5XD5 SPMG 060204**	✓	**20**	**25**	**34**	**180**	**105**	**125**	**55**	
SM19515	SDUM 21XD5 SPMG 060204	✓	21	25	34	180	105	125	55	
SM19522	SDUM 22XD5 SPMG 07T308	✓	22	25	34	185	110	130	55	SPMG 07T308
SM19539	SDUM 23XD5 SPMG 07T308	✓	23	25	34	190	115	135	55	
SM19546	SDUM 24XD5 SPMG 07T308	✓	24	25	34	195	120	140	55	
SM79519	**SDUM 24.5XD5 SPMG 07T308**	✓	**24**	**25**	**34**	**200**	**125**	**145**	**55**	
SM19553	SDUM 25XD5 SPMG 07T308	✓	25	25	34	200	125	145	55	
SM19560	SDUM 26XD5 SPMG 07T308	✓	26	25	34	205	130	150	55	
SM19577	SDUM 27XD5 SPMG 07T308	✓	27	25	34	210	135	155	55	
SM19584	SDUM 28XD5 SPMG 090408	✓	28	25	34	215	140	160	55	SPMG 090408
SM19706	SDUM 29XD5 SPMG 090408	✓	29	25	34	220	145	165	55	

Hole tolerance is given for average conditions and may vary depending on machine rigidity, insert, and operating parameters.

Delik tolerans değerleri ortalama çalışma koşulları esas alınarak belirlenmiş olup, makine kapasitesi ve kullanılan kesici elmas özelliklerine göre farklılık gösterebilir

Size Designation	Master Insert*	Spare Parts		
		Screw	Torx Key	Screw Torque Value N·m
D13 - D15	SPMG 050204	SSV M2x4-9521	STK-T06-9906	0,4
D16 - D21	SPMG 060204	SSV M2.2x5-9503		0,65
D22 - D27	SPMG 07T308	SSV M2.5x7-9506	STK-T08-9908	1,0
D28 - D29	SPMG 090408	SSV M3.5x8-9510	STK-T15-9910	2,7

*Suitable Insert brand is TGTC

SMOXH
SDUM 25x05
SMOXH
SDUM 25x06
SMOXH
SDUM 25x02
SMOXH
SDUM 25x03
SMOXH
SDUM 25x04

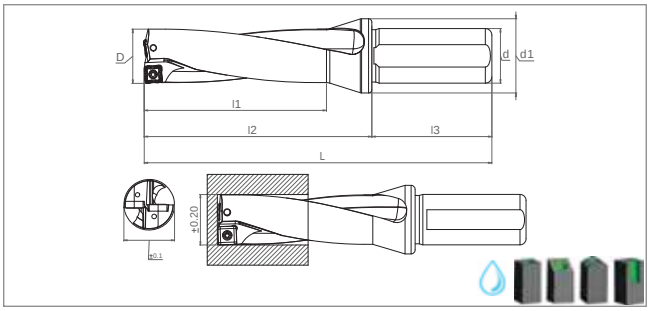

Ordering Code	Item Designation	Dimensions (mm)								Master Insert*
	SDUM Dx3 - SOMT 050204 / 060204 / 070306 U-DRILL	POWER SERIES	*D*	*d*	*d1*	*L*	*l1*	*l2*	*l3*	
SM42032	SDUM 14XD3 SOMT 050204	✓	14	20	25	110	42	60	50	SOMT 050204
SM42049	SDUM 14.5XD3 SOMT 050204	✓	14.5	20	25	113	45	63	50	
SM42056	SDUM 15XD3 SOMT 050204	✓	15	20	25	113	45	63	50	
SM42063	SDUM 15.5XD3 SOMT 050204	✓	15.5	20	25	118	48	68	50	
SM42070	SDUM 16XD3 SOMT 050204	✓	16	25	34	124	48	69	55	
SM42087	SDUM 16.5XD3 SOMT 060204	✓	16.5	25	34	127	51	72	55	SOMT 060204
SM42094	SDUM 17XD3 SOMT 060204	✓	17	25	34	127	51	72	55	
SM42100	SDUM 17.5XD3 SOMT 060204	✓	17.5	25	34	131	54	76	55	
SM42117	SDUM 18XD3 SOMT 060204	✓	18	25	34	131	54	76	55	
SM42124	SDUM 18.5XD3 SOMT 060204	✓	18.5	25	34	134	57	79	55	
SM42131	SDUM 19XD3 SOMT 060204	✓	19	25	34	134	57	79	55	
SM42148	SDUM 19.5XD3 SOMT 070306	✓	19.5	25	34	139	60	84	55	SOMT 070306
SM42155	SDUM 20XD3 SOMT 070306	✓	20	25	34	139	60	84	55	
SM42162	SDUM 20.5XD3 SOMT 070306	✓	20.5	25	34	142	63	87	55	
SM42179	SDUM 21XD3 SOMT 070306	✓	21	25	34	142	63	87	55	
SM42186	SDUM 21.5XD3 SOMT 070306	✓	21.5	25	34	145	66	90	55	
SM42193	SDUM 22XD3 SOMT 070306	✓	22	25	34	145	66	90	55	

Hole tolerance is given for average conditions and may vary depending on machine rigidity, insert, and operating parameters.

Delik tolerans değerleri ortalama çalışma koşulları esas alınarak belirlenmiş olup, makine kapasitesi ve kullanılan kesici elmas özelliklerine göre farklılık gösterebilir

Size Designation	Master Insert*	Spare Parts		
		Screw	Torx Key	Screw Torque Value N·m
D14 - D16	SOMT 050204	SSV M2x4-9521	STK-T06-9906	0,4
D16.5 - D19	SOMT 060204	SSV M2.2x5-9503		0,65
D19.5 - D22	SOMT 070306			

Continued on next page
Devamı sonraki sayfada

*Suitable Insert brand is TGTC

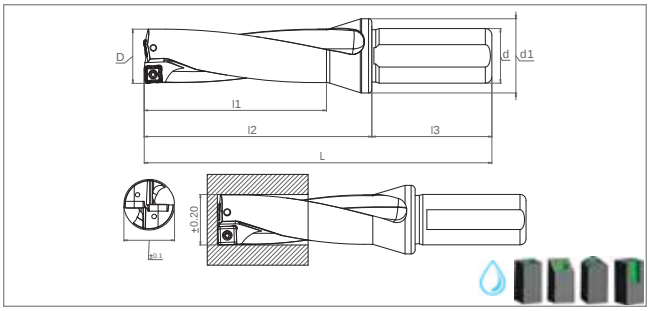

Ordering Code	Item Designation	Dimensions (mm)								Master Insert*
	SDUM Dx3 - SOMT 08T306 / 09T308 U-DRILL	POWER SERIES	*D*	*d*	*d1*	*L*	*l1*	*l2*	*l3*	
SM42209	SDUM 22.5XD3 SOMT 08T306	✓	22.5	25	34	150	69	95	55	SOMT 08T306
SM42216	SDUM 23XD3 SOMT 08T306	✓	23	25	34	150	69	95	55	
SM42223	SDUM 23.5XD3 SOMT 08T306	✓	23.5	25	34	154	72	99	55	
SM42230	SDUM 24XD3 SOMT 08T306	✓	24	25	34	154	72	99	55	
SM42247	SDUM 24.5XD3 SOMT 08T306	✓	24.5	25	34	158	75	103	55	
SM42254	SDUM 25XD3 SOMT 08T306	✓	25	25	34	158	75	103	55	
SM42261	SDUM 25.5XD3 SOMT 08T306	✓	25.5	25	34	161	78	106	55	
SM42278	SDUM 26XD3 SOMT 08T306	✓	26	25	34	161	78	106	55	
SM42285	SDUM 26.5XD3 SOMT 09T308	✓	26.5	25	34	164	81	109	55	SOMT 09T308
SM42292	SDUM 27XD3 SOMT 09T308	✓	27	25	34	164	81	109	55	
SM42308	SDUM 27.5XD3 SOMT 09T308	✓	27.5	25	34	168	84	113	55	
SM42315	SDUM 28XD3 SOMT 09T308	✓	28	25	34	168	84	113	55	
SM42322	SDUM 28.5XD3 SOMT 09T308	✓	28.5	25	34	171	87	116	55	
SM42339	SDUM 29XD3 SOMT 09T308	✓	29	25	34	171	87	116	55	
SM42346	SDUM 29.5XD3 SOMT 09T308	✓	29.5	25	34	177	90	122	55	
SM42353	SDUM 30XD3 SOMT 09T308	✓	30	32	44	171	90	111	60	

Hole tolerance is given for average conditions and may vary depending on machine rigidity, insert, and operating parameters.

Delik tolerans değerleri ortalama çalışma koşulları esas alınarak belirlenmiş olup, makine kapasitesi ve kullanılan kesici elmas özelliklerine göre farklılık gösterebilir

Size Designation	Master Insert*	Spare Parts		
		Screw	Torx Key	Screw Torque Value N·m
D22.5 - D26	SOMT 08T306	SSV M2.5x7-9506	STK-T08-9908	1,0
D26.5 - D30	SOMT 09T308	SSV M3.5x8-SC 9513	STK-T15-9910	2,7

*Suitable Insert brand is TGTC

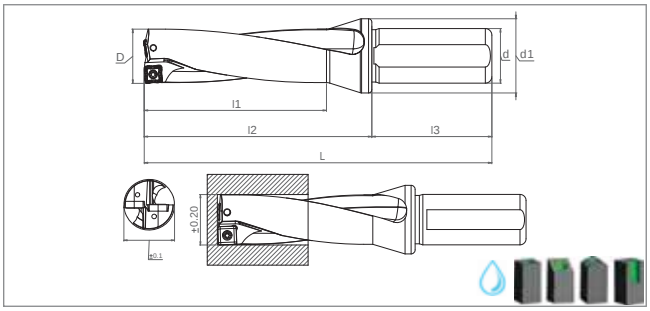

Ordering Code	Item Designation	Dimensions (mm)								Master Insert*
	SDUM Dx4 - SOMT 050204 / 060204 / 070306 / 08T306 / 09T308 U-DRILL	POWER SERIES	*D*	*d*	*d1*	*L*	*l1*	*l2*	*l3*	
SM42360	SDUM 14XD4 SOMT 050204	✓	14	20	25	124	56	74	50	SOMT 050204
SM42377	SDUM 15XD4 SOMT 050204	✓	15	20	25	128	60	78	50	
SM42384	SDUM 16XD4 SOMT 050204	✓	16	25	34	140	64	85	55	
SM42391	SDUM 17XD4 SOMT 060204	✓	17	25	34	144	68	89	55	SOMT 060204
SM42407	SDUM 18XD4 SOMT 060204	✓	18	25	34	149	72	94	55	
SM42414	SDUM 19XD4 SOMT 060204	✓	19	25	34	153	76	98	55	
SM42421	SDUM 20XD4 SOMT 070306	✓	20	25	34	159	80	104	55	SOMT 070306
SM42438	SDUM 21XD4 SOMT 070306	✓	21	25	34	163	84	108	55	
SM42445	SDUM 22XD4 SOMT 070306	✓	22	25	34	167	88	112	55	
SM42452	SDUM 23XD4 SOMT 08T306	✓	23	25	34	173	92	118	55	SOMT 08T306
SM42469	SDUM 24XD4 SOMT 08T306	✓	24	25	34	178	96	123	55	
SM42476	SDUM 25XD4 SOMT 08T306	✓	25	25	34	183	100	128	55	
SM42483	SDUM 26XD4 SOMT 08T306	✓	26	25	34	187	104	132	55	
SM42490	SDUM 27XD4 SOMT 09T308	✓	27	25	34	191	108	136	55	SOMT 09T308
SM42506	SDUM 28XD4 SOMT 09T308	✓	28	25	34	196	112	141	55	
SM42513	SDUM 29XD4 SOMT 09T308	✓	29	25	34	200	116	145	55	
SM42520	SDUM 30XD4 SOMT 09T308	✓	30	32	44	201	120	141	60	

Hole tolerance is given for average conditions and may vary depending on machine rigidity, insert, and operating parameters.

Delik tolerans değerleri ortalama çalışma koşulları esas alınarak belirlenmiş olup, makine kapasitesi ve kullanılan kesici elmas özelliklerine göre farklılık gösterebilir

Size Designation	Master Insert*	Spare Parts		
		Screw	Torx Key	Screw Torque Value N·m
D14 - D16	SOMT 050204	SSV M2x4-9521	STK-T06-9906	0,4
D17 - D19	SOMT 060204	SSV M2.2x5-9503		0,65
D20 - D22	SOMT 070306			
D23 - D26	SOMT 08T306	SSV M2.5x7-9506	STK-T08-9908	1,0
D28 - D30	SOMT 09T308	SSV M3.5x8-SC 9513	STK-T15-9910	2,7

*Suitable Insert brand is TGTC

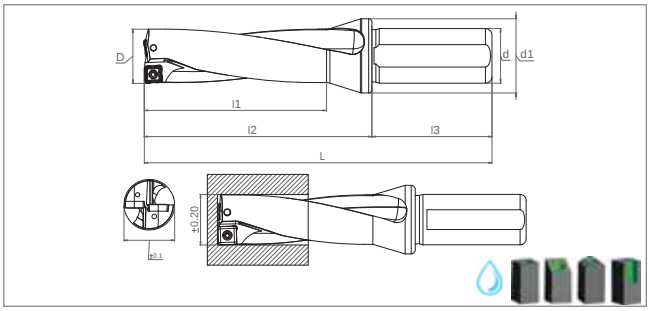

Ordering Code	Item Designation	Dimensions (mm)								Master Insert*
	SDUM Dx5 - SOMT 050204 / 060204 / 070306 / 08T306 / 09T308 U-DRILL	POWER SERIES	*D*	*d*	*d1*	*L*	*l1*	*l2*	*l3*	
SM42537	SDUM 14XD5 SOMT 050204	✓	14	20	25	135	70	85	50	SOMT 050204
SM42544	SDUM 15XD5 SOMT 050204	✓	15	20	25	140	75	90	50	
SM42551	SDUM 16XD5 SOMT 050204	✓	16	25	34	155	80	100	55	
SM42568	SDUM 17XD5 SOMT 060204	✓	17	25	34	160	85	105	55	SOMT 060204
SM42575	SDUM 18XD5 SOMT 060204	✓	18	25	34	165	90	110	55	
SM42582	SDUM 19XD5 SOMT 060204	✓	19	25	34	170	95	115	55	
SM42599	SDUM 20XD5 SOMT 070306	✓	20	25	34	175	100	120	55	SOMT 070306
SM42605	SDUM 21XD5 SOMT 070306	✓	21	25	34	180	105	125	55	
SM42612	SDUM 22XD5 SOMT 070306	✓	22	25	34	185	110	130	55	
SM42629	SDUM 23XD5 SOMT 08T306	✓	23	25	34	190	115	135	55	SOMT 08T306
SM42636	SDUM 24XD5 SOMT 08T306	✓	24	25	34	195	120	140	55	
SM42643	SDUM 25XD5 SOMT 08T306	✓	25	25	34	200	125	145	55	
SM42650	SDUM 26XD5 SOMT 08T306	✓	26	25	34	205	130	150	55	
SM42667	SDUM 27XD5 SOMT 09T308	✓	27	25	34	210	135	155	55	SOMT 09T308
SM42674	SDUM 28XD5 SOMT 09T308	✓	28	25	34	215	140	160	55	
SM42681	SDUM 29XD5 SOMT 09T308	✓	29	25	34	220	145	165	55	
SM42698	SDUM 30XD5 SOMT 09T308	✓	30	32	44	231	150	171	60	

Hole tolerance is given for average conditions and may vary depending on machine rigidity, insert, and operating parameters.

Delik tolerans değerleri ortalama çalışma koşulları esas alınarak belirlenmiş olup, makine kapasitesi ve kullanılan kesici elmas özelliklerine göre farklılık gösterebilir

Size Designation	Master Insert*	Spare Parts		
		Screw	Torx Key	Screw Torque Value N·m
D14 - D16	SOMT 050204	SSV M2x4-9521	STK-T06-9906	0,4
D17 - D19	SOMT 060204	SSV M2.2x5-9503		0,65
D20 - D22	SOMT 070306			
D23 - D26	SOMT 08T306	SSV M2.5x7-9506	STK-T08-9908	1,0
D28 - D30	SOMT 09T308	SSV M3.5x8-SC 9513	STK-T15-9910	2,7

*Suitable Insert brand is TGTC

D6

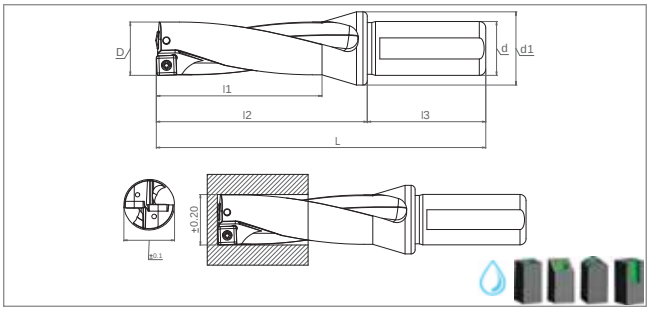

Ordering Code	Item Designation	POWER SERIES	D	d	d1	L	l1	l2	l3	Master Insert*
	SDUM Dx2 - SPMT/XOMT (PD) *SPMT 050204 / 060205 / 07T208 / 090308 / 11T308* *XOMT 050204 / 060204 / 07T205 / 090305 / 11T306* *U-DRILL*									
SM59337	SDUM 14XD2 SP-XO05	✓	14	20	25	96	28	46	50	SPMT(PD)050204 XOMT(PD)050204
SM59344	SDUM 15XD2 SP-XO05	✓	15	20	25	99	30	49	50	
SM59351	SDUM 16XD2 SP-XO05	✓	16	25	34	108	32	53	55	
SM59368	SDUM 17XD2 SP-XO06	✓	17	25	34	110	34	55	55	SPMT(PD) 060205 XOMT(PD)060204
SM59375	SDUM 18XD2 SP-XO06	✓	18	25	34	113	36	58	55	
SM59382	SDUM 19XD2 SP-XO06	✓	19	25	34	115	38	60	55	
SM59399	SDUM 20XD2 SP-XO07	✓	20	25	34	119	40	64	55	SPMT(PD) 07T208 XOMT(PD)07T205
SM59405	SDUM 21XD2 SP-XO07	✓	21	25	34	121	42	66	55	
SM59412	SDUM 22XD2 SP-XO07	✓	22	25	34	123	44	68	55	
SM59429	SDUM 23XD2 SP-XO07	✓	23	25	34	127	46	72	55	
SM59436	SDUM 24XD2 SP-XO09	✓	24	25	44	130	48	75	55	SPMT(PD) 090308 XOMT(PD)090305
SM59443	SDUM 25XD2 SP-XO09	✓	25	25	44	133	50	78	55	
SM59450	SDUM 26XD2 SP-XO09	✓	26	25	44	135	52	80	55	
SM59467	SDUM 27XD2 SP-XO09	✓	27	25	44	137	54	82	55	
SM59474	SDUM 28XD2 SP-XO09	✓	28	25	44	140	56	85	55	
SM59481	SDUM 29XD2 SP-XO09	✓	29	25	44	142	58	87	55	
SM59498	SDUM 30XD2 SP-XO11	✓	30	32	44	141	60	81	60	SPMT(PD) 11T308 XOMT(PD) 11T306

Hole tolerance is given for average conditions and may vary depending on machine rigidity, insert, and operating parameters.

Delik tolerans değerleri ortalama çalışma koşulları esas alınarak belirlenmiş olup, makine kapasitesi ve kullanılan kesici elmas özelliklerine göre farklılık gösterebilir

Size Designation	Master Insert*	Spare Parts		
		Screw	Torx Key	Screw Torque Value N·m
D14 - D16	SPMT(PD)050204 XOMT(PD) 050204	SSV M2x4-9521	STK-T06-9906	0,4
D17 - D19	SPMT(PD) 060205 XOMT(PD) 060204	SSV M2.2x5-9503		0,65
D20 - D23.5	SPMT(PD) 07T208 XOMT(PD) 07T205	SSV M2.5x6-9505	STK-T08-9908	1,0
D24 - D29	SPMT(PD) 090308 XOMT(PD) 090305	SSV M3x8-9508	STK-T08-9908	1,9
D30	SPMT(PD) 11T308 XOMT(PD) 11T306	SSV M3.5x10-9511	STK-T15-9910	2,7

*Suitable Insert brand is KRLY

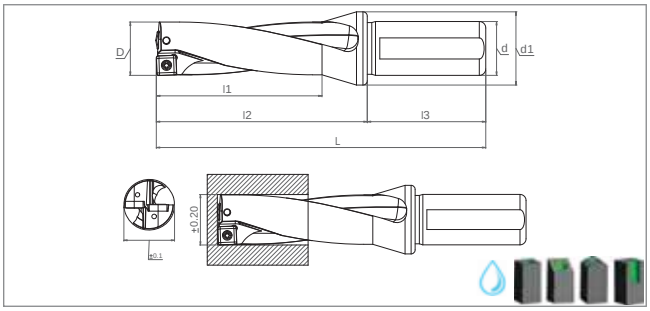

Ordering Code	Item Designation	POWER SERIES	D	d	d1	L	l1	l2	l3	Master Insert*
	SDUM Dx3 - SPMT/XOMT (PD) *SPMT 040204 / 050204 / 060205 / 07T208* *XOMT 040204 / 050204 / 060204 / 07T205* *U-DRILL*									
SM30039	SDUM 12.5XD3 SP-XO04	✓	12,5	20	25	107	39	57	50	SPMT(PD)040204 XOMT(PD)040204
SM30046	SDUM 13XD3 SP-XO04	✓	13	20	25	107	39	57	50	
SM30053	SDUM 13.5XD3 SP-XO04	✓	13,5	20	25	110	42	60	50	
SM37519	SDUM 14XD3 SP-XO05	✓	14	20	25	110	42	60	50	SPMT(PD)050204 XOMT(PD)050204
SM30077	SDUM 14.5XD3 SP-XO05	✓	14,5	20	25	113	45	63	50	
SM37526	SDUM 15XD3 SP-XO05	✓	15	20	25	113	45	63	50	
SM30091	SDUM 15.5XD3 SP-XO05	✓	15,5	20	25	118	48	68	50	
SM38899	SDUM 16XD3 SP-XO05	✓	16	25	34	124	48	69	55	
SM30114	SDUM 16.5XD3 SP-XO06	✓	16,5	25	34	127	51	72	55	SPMT(PD) 060205 XOMT(PD)060204
SM30121	SDUM 17XD3 SP-XO06	✓	17	25	34	127	51	72	55	
SM30510	SDUM 17.5XD3 SP-XO06	✓	17,5	25	34	131	54	76	55	
SM30145	SDUM 18XD3 SP-XO06	✓	18	25	34	131	54	76	55	
SM30152	SDUM 18.5XD3 SP-XO06	✓	18,5	25	34	134	57	79	55	
SM30169	SDUM 19XD3 SP-XO06	✓	19	25	34	134	57	79	55	
SM30176	SDUM 19.5XD3 SP-XO06	✓	19,5	25	34	139	60	84	55	
SM30183	SDUM 20XD3 SP-XO07	✓	20	25	34	139	60	84	55	SPMT(PD) 07T208 XOMT(PD)07T205
SM30190	SDUM 20.5XD3 SP-XO07	✓	20,5	25	34	142	63	87	55	
SM30343	SDUM 21XD3 SP-XO07	✓	21	25	34	142	63	87	55	
SM30206	SDUM 21.5XD3 SP-XO07	✓	21,5	25	34	145	66	90	55	
SM30213	SDUM 22XD3 SP-XO07	✓	22	25	34	145	66	90	55	
SM30220	SDUM 22.5XD3 SP-XO07	✓	22,5	25	34	150	69	95	55	
SM30237	SDUM 23XD3 SP-XO07	✓	23	25	34	150	69	95	55	
SM30244	SDUM 23.5XD3 SP-XO07	✓	23,5	25	34	154	72	99	55	

Hole tolerance is given for average conditions and may vary depending on machine rigidity, insert, and operating parameters.

Delik tolerans değerleri ortalama çalışma koşulları esas alınarak belirlenmiş olup, makine kapasitesi ve kullanılan kesici elmas özelliklerine göre farklılık gösterebilir

Size Designation	Master Insert*	Spare Parts		
		Screw	Torx Key	Screw Torque Value N·m
D12.5 - D13.5	SPMT(PD)040204 XOMT(PD) 040204	SSV M2x4-9521	STK-T06-9906	0,4
D14 - D16	SPMT(PD)050204 XOMT(PD) 050204			
D16.5 - D19.5	SPMT(PD) 060205 XOMT(PD) 060204	SSV M2.2x5-9503		0,65
D20 - D23.5	SPMT(PD) 07T208 XOMT(PD) 07T205	SSV M2.5x6-9505	STK-T08-9908	1,0

Continued on next page
Devamı sonraki sayfada

*Suitable Insert brand is KRLY

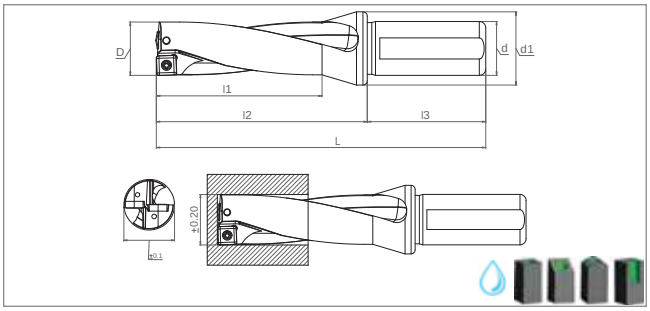

Ordering Code	Item Designation	Dimensions (mm)								Master Insert*
	SDUM Dx3 - SPMT/XOMT (PD) *SPMT 090308 / 11T308 / 130410* *XOMT 090305 / 11T306 / 130416* *U-DRILL*	POWER SERIES	*D*	*d*	*d1*	*L*	*l1*	*l2*	*l3*	
SM30251	SDUM 24XD3 SP-XO09	✓	24	25	34	154	72	99	55	SPMT(PD)090308 XOMT(PD)090305
SM30268	SDUM 24.5XD3 SP-XO09	✓	24,5	25	34	158	75	103	55	
SM30275	SDUM 25XD3 SP-XO09	✓	25	25	34	158	75	103	55	
SM30282	SDUM 25.5XD3 SP-XO09	✓	25,5	25	34	161	78	106	55	
SM30299	SDUM 26XD3 SP-XO09	✓	26	25	34	161	78	106	55	
SM30305	SDUM 26.5XD3 SP-XO09	✓	26,5	25	34	164	81	109	55	
SM30312	SDUM 27XD3 SP-XO09	✓	27	25	34	164	81	109	55	
SM30329	SDUM 27.5XD3 SP-XO09	✓	27,5	25	34	168	84	113	55	
SM30336	SDUM 28XD3 SP-XO09	✓	28	25	34	168	84	113	55	
SM30374	SDUM 28.5XD3 SP-XO09	✓	28,5	25	34	171	87	116	55	
SM30367	SDUM 29XD3 SP-XO09	✓	29	25	34	171	87	116	55	
SM30381	SDUM 29.5XD3 SP-XO09	✓	29,5	25	34	177	90	122	55	
SM30398	SDUM 30XD3 SP-XO11	✓	30	32	44	171	90	111	60	SPMT(PD) 11T308 XOMT(PD) 11T306
SM59146	SDUM 31XD3 SP-XO11	✓	31	32	44	175	93	115	60	
SM59160	SDUM 32XD3 SP-XO11	✓	32	32	44	178	96	118	60	
SM59184	SDUM 33XD3 SP-XO11	✓	33	32	44	182	99	122	60	
SM59207	SDUM 34XD3 SP-XO11	✓	34	32	44	185	102	125	60	
SM59221	SDUM 35XD3 SP-XO11	✓	35	32	44	189	105	129	60	
SM59245	SDUM 36XD3 SP-XO13	✓	36	32	44	193	108	133	60	SPMT(PD) 130410 XOMT(PD) 130416
SM59269	SDUM 37XD3 SP-XO13	✓	37	32	44	197	111	137	60	
SM59283	SDUM 38XD3 SP-XO13	✓	38	32	44	201	114	141	60	
SM59290	SDUM 39XD3 SP-XO13	✓	39	32	44	204	117	144	60	
SM59306	SDUM 40XD3 SP-XO13	✓	40	32	44	208	120	148	60	
SM59313	SDUM 41XD3 SP-XO13	✓	41	32	44	212	123	152	60	
SM59320	SDUM 42XD3 SP-XO13	✓	42	32	44	215	126	155	60	

Hole tolerance is given for average conditions and may vary depending on machine rigidity, insert, and operating parameters.

Delik tolerans değerleri ortalama çalışma koşulları esas alınarak belirlenmiş olup, makine kapasitesi ve kullanılan kesici elmas özelliklerine göre farklılık gösterebilir

Size Designation	Master Insert*	Spare Parts		
		Screw	Torx Key	Screw Torque Value N·m
D24 - D29.5	SPMT(PD) 090308 XOMT(PD) 090305	SSV M3x8-9508	STK-T08-9908	1,9
D30 - D35	SPMT(PD) 11T308 XOMT(PD) 11T306	SSV M3.5x10-9511	STK-T15-9910	2,7
D36 - D42	SPMT(PD) 130410 XOMT(PD) 130416	SSV M4x10-9514		3,9

*Suitable Insert brand is KRLY

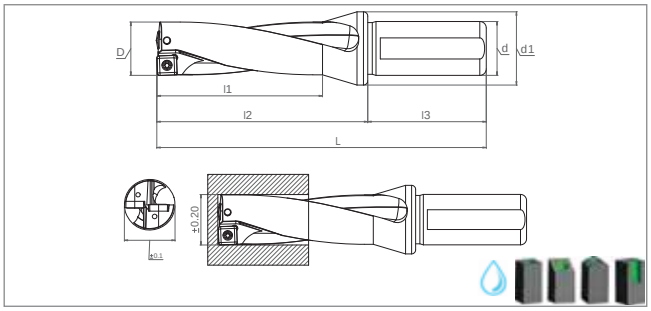

Ordering Code	Item Designation	Dimensions (mm)								Master Insert*
	SDUM Dx4 - SPMT/XOMT (PD) *SPMT 040204 / 050204 / 060205 / 07T208* *XOMT 040204 / 050204 / 060204 / 07T205* *U-DRILL*	POWER SERIES	*D*	*d*	*d1*	*L*	*l1*	*l2*	*l3*	
SM38905	SDUM 12.5XD4 SP-XO04	✓	12,5	20	25	120	52	70	50	SPMT(PD)040204 XOMT(PD)040204
SM30411	SDUM 13XD4 SP-XO04	✓	13	20	25	120	52	70	50	
SM38912	SDUM 13.5XD4 SP-XO04	✓	13,5	20	25	124	56	74	50	
SM30435	SDUM 14XD4 SP-XO05	✓	14	20	25	124	56	74	50	SPMT(PD)050204 XOMT(PD)050204
SM38882	SDUM 14.5XD4 SP-XO05	✓	14,5	20	25	128	60	78	50	
SM30459	SDUM 15XD4 SP-XO05	✓	15	20	25	128	60	78	50	
SM30466	SDUM 15.5XD4 SP-XO05	✓	15,5	20	25	131	64	81	50	
SM30473	SDUM 16XD4 SP-XO05	✓	16	25	34	140	64	85	55	
SM38790	SDUM 16.5XD4 SP-XO06	✓	16,5	25	34	144	68	89	55	SPMT(PD) 060205 XOMT(PD)060204
SM30497	SDUM 17XD4 SP-XO06	✓	17	25	34	144	68	89	55	
SM30527	SDUM 17.5XD4 SP-XO06	✓	17,5	25	34	149	72	94	55	
SM30534	SDUM 18XD4 SP-XO06	✓	18	25	34	149	72	94	55	
SM30541	SDUM 18.5XD4 SP-XO06	✓	18,5	25	34	153	76	98	55	
SM30558	SDUM 19XD4 SP-XO06	✓	19	25	34	153	76	98	55	
SM30565	SDUM 19.5XD4 SP-XO06	✓	19,5	25	34	159	80	104	55	
SM30572	SDUM 20XD4 SP-XO07	✓	20	25	34	159	80	104	55	SPMT(PD) 07T208 XOMT(PD)07T205
SM30589	SDUM 20.5XD4 SP-XO07	✓	20,5	25	34	163	84	108	55	
SM30732	SDUM 21XD4 SP-XO07	✓	21	25	34	163	84	108	55	
SM30596	SDUM 21.5XD4 SP-XO07	✓	21,5	25	34	167	88	112	55	
SM30602	SDUM 22XD4 SP-XO07	✓	22	25	34	167	88	112	55	
SM30619	SDUM 22.5XD4 SP-XO07	✓	22,5	25	34	173	92	118	55	
SM30626	SDUM 23XD4 SP-XO07	✓	23	25	34	173	92	118	55	
SM30633	SDUM 23.5XD4 SP-XO07	✓	23,5	25	34	178	96	123	55	

Size Designation	Master Insert*	Spare Parts		
		Screw	Torx Key	Screw Torque Value N·m
D12.5 - D13.5	SPMT(PD)040204 XOMT(PD) 040204	SSV M2x4-9521	STK-T06-9906	0,4
D14 - D16	SPMT(PD)050204 XOMT(PD) 050204			
D16.5 - D19.5	SPMT(PD) 060205 XOMT(PD) 060204	SSV M2.2x5-9503		0,65
D20 - D23.5	SPMT(PD) 07T208 XOMT(PD) 07T205	SSV M2.5x6-9505	STK-T08-9908	1,0

Continued on next page
Devamı sonraki sayfada

*Suitable Insert brand is KRLY

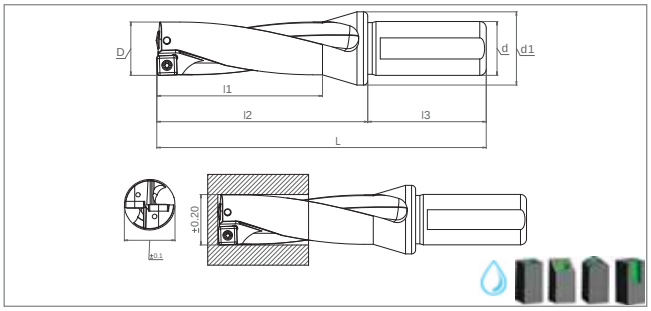

Ordering Code	Item Designation	Dimensions (mm)								Master Insert*
SDUM Dx4 - SPMT/XOMT (PD) *SPMT 090308 / 11T308* *XOMT 090305 / 11T306* *U-DRILL*		POWER SERIES	*D*	*d*	*d1*	*L*	*l1*	*l2*	*l3*	
SM30640	SDUM 24XD4 SP-XO09	✓	24	25	34	178	96	123	55	SPMT(PD)090308 XOMT(PD)090305
SM30657	SDUM 24.5XD4 SP-XO09	✓	24,5	25	34	183	100	128	55	
SM30664	SDUM 25XD4 SP-XO09	✓	25	25	34	183	100	128	55	
SM30671	SDUM 25.5XD4 SP-XO09	✓	25,5	25	34	187	104	132	55	
SM30688	SDUM 26XD4 SP-XO09	✓	26	25	34	187	104	132	55	
SM30695	SDUM 26.5XD4 SP-XO09	✓	26,5	25	34	191	108	136	55	
SM30701	SDUM 27XD4 SP-XO09	✓	27	25	34	191	108	136	55	
SM30718	SDUM 27.5XD4 SP-XO09	✓	27,5	25	34	196	112	141	55	
SM30725	SDUM 28XD4 SP-XO09	✓	28	25	34	196	112	141	55	
SM30756	SDUM 28.5XD4 SP-XO09	✓	28,5	25	34	200	116	145	55	
SM30749	SDUM 29XD4 SP-XO09	✓	29	25	34	200	116	145	55	
SM30763	SDUM 29.5XD4 SP-XO09	✓	29,5	25	34	202	120	147	55	
SM30770	SDUM 30XD4 SP-XO11	✓	30	32	44	201	120	141	60	SPMT(PD) 11T308 XOMT(PD) 11T306

Hole tolerance is given for average conditions and may vary depending on machine rigidity, insert, and operating parameters.

Delik tolerans değerleri ortalama çalışma koşulları esas alınarak belirlenmiş olup, makine kapasitesi ve kullanılan kesici elmas özelliklerine göre farklılık gösterebilir

Size Designation	Master Insert*	Spare Parts		
		Screw	Torx Key	Screw Torque Value
				N·m
D24 - D29.5	SPMT(PD) 090308 XOMT(PD) 090305	SSV M3x8-9508	STK-T08-9908	1,9
D30	SPMT(PD) 11T308 XOMT(PD) 11T306	SSV M3.5x10-9511	STK-T15-9910	2,7

*Suitable Insert brand is KRLY

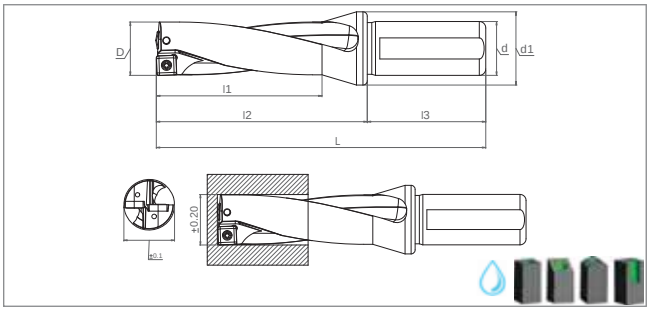

Ordering Code	Item Designation	POWER SERIES	D	d	d1	L	l1	l2	l3	Master Insert*
SDUM Dx5 - SPMT/XOMT (PD) *SPMT 040204 / 050204 / 060205 / 07T208 / 11T308* *XOMT 040204 / 050204 / 060204 / 07T205 / 11T306* *U-DRILL*										
SM30787	SDUM 13XD5 SP-XO04	✓	13	20	25	130	65	80	50	SPMT(PD)040204 XOMT(PD)040204
SM30794	SDUM 14XD5 SP-XO05	✓	14	20	25	135	70	85	50	SPMT(PD)050204 XOMT(PD)050204
SM30800	SDUM 15XD5 SP-XO05	✓	15	20	25	140	75	90	50	
SM30817	SDUM 16XD5 SP-XO05	✓	16	25	34	155	80	100	55	
SM30824	SDUM 17XD5 SP-XO06	✓	17	25	34	160	85	105	55	SPMT(PD) 060205 XOMT(PD)060204
SM30831	SDUM 18XD5 SP-XO06	✓	18	25	34	165	90	110	55	
SM30848	SDUM 19XD5 SP-XO06	✓	19	25	34	170	95	115	55	
SM30855	SDUM 20XD5 SP-XO07	✓	20	25	34	175	100	120	55	SPMT(PD) 07T208 XOMT(PD)07T205
SM30862	SDUM 21XD5 SP-XO07	✓	21	25	34	180	105	125	55	
SM30879	SDUM 22XD5 SP-XO07	✓	22	25	34	185	110	130	55	
SM30886	SDUM 23XD5 SP-XO07	✓	23	25	34	190	115	135	55	
SM30893	SDUM 24XD5 SP-XO09	✓	24	25	34	195	120	140	55	SPMT(PD)090308 XOMT(PD)090305
SM30909	SDUM 25XD5 SP-XO09	✓	25	25	34	200	125	145	55	
SM30916	SDUM 26XD5 SP-XO09	✓	26	25	34	205	130	150	55	
SM30923	SDUM 27XD5 SP-XO09	✓	27	25	34	210	135	155	55	
SM30930	SDUM 28XD5 SP-XO09	✓	28	25	34	215	140	160	55	
SM30947	SDUM 29XD5 SP-XO09	✓	29	25	34	220	145	165	55	
SM50440	SDUM 30XD5 SP-XO11	✓	30	32	44	231	150	171	60	SPMT(PD) 11T308 XOMT(PD) 11T306

Hole tolerance is given for average conditions and may vary depending on machine rigidity, insert, and operating parameters.

Delik tolerans değerleri ortalama çalışma koşulları esas alınarak belirlenmiş olup, makine kapasitesi ve kullanılan kesici elmas özelliklerine göre farklılık gösterebilir

Size Designation	Master Insert*	Spare Parts		
		Screw	Torx Key	Screw Torque Value N·m
D13	SPMT(PD)040204 XOMT(PD) 040204	SSV M2x4-9521	STK-T06-9906	0,4
D14 - D16	SPMT(PD)050204 XOMT(PD) 050204			
D17 - D19	SPMT(PD) 060205 XOMT(PD) 060204	SSV M2.2x5-9503		0,65
D20 - D23	SPMT(PD) 07T208 XOMT(PD) 07T205	SSV M2.5x6-9505	STK-T08-9908	1,0
D24 - D29	SPMT(PD) 090308 XOMT(PD) 090305	SSV M3x8-9508	STK-T08-9908	1,9
D30	SPMT(PD) 11T308 XOMT(PD) 11T306	SSV M3.5x10-9511	STK-T15-9910	2,7

*Suitable Insert brand is KRLY

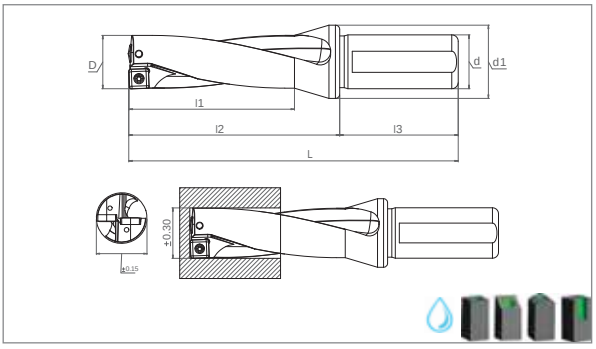

Ordering Code	Item Designation	Dimensions (mm)								Master Insert*
SDUM Dx6 - SPMT/XOMT (PD) *SPMT 040204 / 050204 / 060205 / 07T208 / 11T308* *XOMT 040204 / 050204 / 060204 / 07T205 / 11T306* *U-DRILL*		POWER SERIES	*D*	*d*	*d1*	*L*	*l1*	*l2*	*l3*	
SM60852	SDUM 16XD6 SP-XO05	✓	16	25	34	172	96	117	55	SPMT(PD)050204 XOMT(PD)050204
SM60869	SDUM 17XD6 SP-XO06	✓	17	25	34	178	102	123	55	SPMT(PD) 060205 XOMT(PD)060204
SM60876	SDUM 18XD6 SP-XO06	✓	18	25	34	184	108	129	55	
SM60883	SDUM 19XD6 SP-XO06	✓	19	25	34	190	114	135	55	
SM60890	SDUM 20XD6 SP-XO07	✓	20	25	34	196	120	141	55	SPMT(PD) 07T205 XOMT(PD)07T205
SM60906	SDUM 21XD6 SP-XO07	✓	21	25	34	202	126	147	55	
SM60913	SDUM 22XD6 SP-XO07	✓	22	25	34	208	132	153	55	
SM60920	SDUM 23XD6 SP-XO07	✓	23	25	34	214	138	159	55	
SM60937	SDUM 24XD6 SP-XO09	✓	24	25	34	220	144	165	55	SPMT(PD)090308 XOMT(PD)090305
SM60944	SDUM 25XD6 SP-XO09	✓	25	25	34	226	150	171	55	
SM60951	SDUM 26XD6 SP-XO09	✓	26	25	34	232	156	177	55	
SM60968	SDUM 27XD6 SP-XO09	✓	27	25	34	238	162	183	55	
SM60975	SDUM 28XD6 SP-XO09	✓	28	25	34	244	168	189	55	
SM60982	SDUM 29XD6 SP-XO09	✓	29	25	34	250	174	195	55	
SM60999	SDUM 30XD6 SP-XO11	✓	30	32	44	260	180	200	60	SPMT(PD) 11T308 XOMT(PD) 11T306

Hole tolerance is given for average conditions and may vary depending on machine rigidity, insert, and operating parameters.

Delik tolerans değerleri ortalama çalışma koşulları esas alınarak belirlenmiş olup, makine kapasitesi ve kullanılan kesici elmas özelliklerine göre farklılık gösterebilir

Size Designation	Master Insert*	Spare Parts		
		Screw	Torx Key	Screw Torque Value N·m
D16	SPMT(PD)050204 XOMT(PD) 050204	SSV M2x4-9521	STK-T06-9906	0,4
D17 - D19	SPMT(PD) 060205 XOMT(PD) 060204	SSV M2.2x5-9503		0,65
D20 - D23	SPMT(PD) 07T208 XOMT(PD) 07T205	SSV M2.5x6-9505	STK-T08-9908	1,0
D24 - D29	SPMT(PD) 090308 XOMT(PD) 090305	SSV M3x8-9508	STK-T08-9908	1,9
D30	SPMT(PD) 11T308 XOMT(PD) 11T306	SSV M3.5x10-9511	STK-T15-9910	2,7

*Suitable Insert brand is KRLY

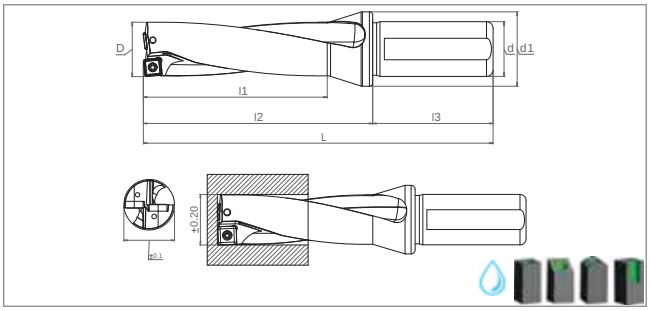

Ordering Code	Item Designation	Dimensions (mm)								Master Insert*
	SDUM Dx3 - SPGT 050204 / 060204 / 07T308 U-DRILL	POWER SERIES	*D*	*d*	*d1*	*L*	*l1*	*l2*	*l3*	
SM40595	SDUM 13XD3 SPGT 050204	✓	13	20	25	107	39	57	50	SPGT 050204 PM/EM
SM40601	SDUM 13.5XD3 SPGT 050204	✓	13,5	20	25	110	42	60	50	
SM40618	SDUM 14XD3 SPGT 050204	✓	14	20	25	110	42	60	50	
SM40625	SDUM 14.5XD3 SPGT 050204	✓	14,5	20	25	113	45	63	50	
SM40632	SDUM 15XD3 SPGT 050204	✓	15	20	25	113	45	63	50	
SM40649	SDUM 15.5XD3 SPGT 060204	✓	15,5	20	25	118	48	68	50	SPGT 060204 PM/EM
SM40656	SDUM 16XD3 SPGT 060204	✓	16	25	34	124	48	69	55	
SM40663	SDUM 16.5XD3 SPGT 060204	✓	16,5	25	34	127	51	72	55	
SM40670	SDUM 17XD3 SPGT 060204	✓	17	25	34	127	51	72	55	
SM40687	SDUM 17.5XD3 SPGT 060204	✓	17,5	25	34	131	54	76	55	
SM40694	SDUM 18XD3 SPGT 060204	✓	18	25	34	131	54	76	55	
SM40700	SDUM 18.5XD3 SPGT 060204	✓	18,5	25	34	134	57	79	55	
SM40717	SDUM 19XD3 SPGT 060204	✓	19	25	34	134	57	79	55	
SM40724	SDUM 19.5XD3 SPGT 060204	✓	19,5	25	34	139	60	84	55	
SM40731	SDUM 20XD3 SPGT 060204	✓	20	25	34	139	60	84	55	
SM40748	SDUM 20.5XD3 SPGT 060204	✓	20,5	25	34	142	63	87	55	
SM40755	SDUM 21XD3 SPGT 060204	✓	21	25	34	142	63	87	55	
SM40762	SDUM 21.5XD3 SPGT 060204	✓	21,5	25	34	145	66	90	55	
SM40779	SDUM 22XD3 SPGT 07T308	✓	22	25	34	145	66	90	55	SPGT 07T308 PM/EM
SM40786	SDUM 22.5XD3 SPGT 07T308	✓	22,5	25	34	150	69	95	55	
SM40793	SDUM 23XD3 SPGT 07T308	✓	23	25	34	150	69	95	55	
SM40809	SDUM 23.5XD3 SPGT 07T308	✓	23,5	25	34	154	72	99	55	
SM40816	SDUM 24XD3 SPGT 07T308	✓	24	25	34	154	72	99	55	
SM40823	SDUM 24.5XD3 SPGT 07T308	✓	24,5	25	34	158	75	103	55	
SM40830	SDUM 25XD3 SPGT 07T308	✓	25	25	34	158	75	103	55	
SM40854	SDUM 26XD3 SPGT 07T308	✓	26	25	34	161	78	106	55	
SM40878	SDUM 27XD3 SPGT 07T308	✓	27	25	34	164	81	109	55	

Hole tolerance is given for average conditions and may vary depending on machine rigidity, insert, and operating parameters.

Delik tolerans değerleri ortalama çalışma koşulları esas alınarak belirlenmiş olup, makine kapasitesi ve kullanılan kesici elmas özelliklerine göre farklılık gösterebilir

Size Designation	Master Insert*	Spare Parts		
		Screw	Torx Key	Screw Torque Value N·m
D13 - D15	SPGT 050204 PM/EM	SSV M2x5-9502	STK-T06-9906	0,4
D15.5 - D21.5	SPGT 060204 PM/EM	SSV M2.2x5-9503		0,65
D22 - D27	SPGT 07T308 PM/EM	SSV M2.5x7-9506	STK-T08-9908	1,0

Continued on next page
Devamı sonraki sayfada

*Suitable Insert brand is ZCC-CT

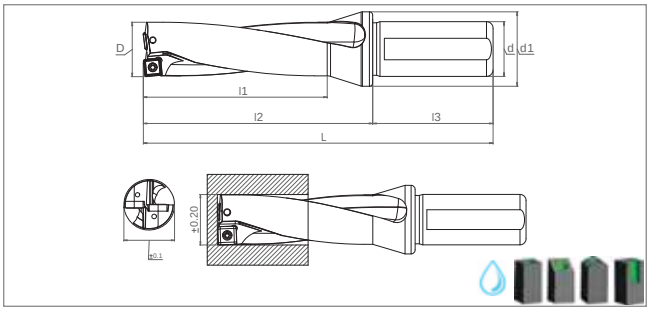

Ordering Code	Item Designation	Dimensions (mm)								Master Insert*
	SDUM Dx3 - SPGT 090408 / 110408 U-DRILL	POWER SERIES	*D*	*d*	*d1*	*L*	*l1*	*l2*	*l3*	
SM40892	SDUM 28XD3 SPGT 090408	✓	28	25	34	168	84	113	55	SPGT 090408 PM/EM
SM40915	SDUM 29XD3 SPGT 090408	✓	29	25	34	171	87	116	55	
SM40939	SDUM 30XD3 SPGT 090408	✓	30	32	44	171	90	111	60	
SM40946	SDUM 31XD3 SPGT 090408	✓	31	32	44	175	93	115	60	
SM40953	SDUM 32XD3 SPGT 090408	✓	32	32	44	178	96	118	60	
SM40960	SDUM 33XD3 SPGT 090408	✓	33	32	44	182	99	122	60	
SM40977	SDUM 34XD3 SPGT 110408	✓	34	32	44	185	102	125	60	SPGT 110408 PM/EM
SM40984	SDUM 35XD3 SPGT 110408	✓	35	32	44	189	105	129	60	
SM40991	SDUM 36XD3 SPGT 110408	✓	36	32	44	193	108	133	60	
SM41004	SDUM 37XD3 SPGT 110408	✓	37	32	44	197	111	137	60	
SM41011	SDUM 38XD3 SPGT 110408	✓	38	32	44	201	114	141	60	
SM41028	SDUM 39XD3 SPGT 110408	✓	39	32	44	204	117	144	60	
SM41035	SDUM 40XD3 SPGT 110408	✓	40	32	44	208	120	148	60	

Hole tolerance is given for average conditions and may vary depending on machine rigidity, insert, and operating parameters.

Delik tolerans değerleri ortalama çalışma koşulları esas alınarak belirlenmiş olup, makine kapasitesi ve kullanılan kesici elmas özelliklerine göre farklılık gösterebilir

Size Designation	Master Insert*	Spare Parts		
		Screw	Torx Key	Screw Torque Value
				N·m
D28 - D33	SPGT 090408 PM/EM	SSV M3.5x8-9510	STK-T15-9910	2,7
D34 - D40	SPGT 110408 PM/EM	SSV M4x10-9514		3,9

*Suitable Insert brand is ZCC-CT

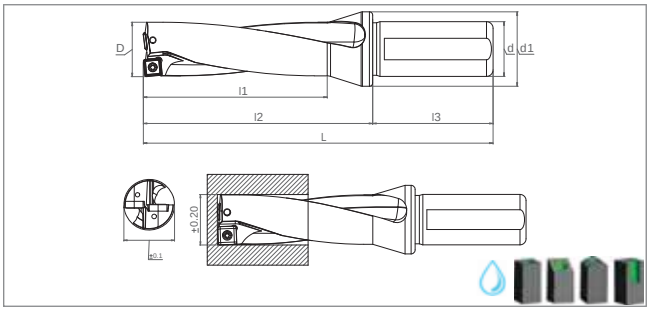

Ordering Code	Item Designation	POWER SERIES	D	d	d1	L	l1	l2	l3	Master Insert*
	SDUM Dx4 - SPGT 050204 / 060204 / 07T308 / 090408 U-DRILL									
SM41141	SDUM 13XD4 SPGT 050204	✓	13	20	25	120	52	70	50	SPGT 050204 PM/EM
SM41158	SDUM 14XD4 SPGT 050204	✓	14	20	25	124	56	74	50	
SM41165	SDUM 15XD4 SPGT 050204	✓	15	20	25	128	60	78	50	
SM41172	SDUM 16XD4 SPGT 060204	✓	16	25	34	140	64	85	55	SPGT 060204 PM/EM
SM41189	SDUM 17XD4 SPGT 060204	✓	17	25	34	144	68	89	55	
SM41196	SDUM 18XD4 SPGT 060204	✓	18	25	34	149	72	94	55	
SM41202	SDUM 19XD4 SPGT 060204	✓	19	25	34	153	76	98	55	
SM41219	SDUM 20XD4 SPGT 060204	✓	20	25	34	159	80	104	55	
SM41226	SDUM 21XD4 SPGT 060204	✓	21	25	34	163	84	108	55	
SM41233	SDUM 22XD4 SPGT 07T308	✓	22	25	34	167	88	112	55	SPGT 07T308 PM/EM
SM41240	SDUM 23XD4 SPGT 07T308	✓	23	25	34	173	92	118	55	
SM41257	SDUM 24XD4 SPGT 07T308	✓	24	25	34	178	96	123	55	
SM41264	SDUM 25XD4 SPGT 07T308	✓	25	25	34	183	100	128	55	
SM41271	SDUM 26XD4 SPGT 07T308	✓	26	25	34	187	104	132	55	
SM41288	SDUM 27XD4 SPGT 07T308	✓	27	25	34	191	108	136	55	
SM41295	SDUM 28XD4 SPGT 090408	✓	28	25	34	196	112	141	55	SPGT 090408 PM/EM
SM41301	SDUM 29XD4 SPGT 090408	✓	29	25	34	200	116	145	55	
SM41318	SDUM 30XD4 SPGT 090408	✓	30	32	44	201	120	141	60	

Hole tolerance is given for average conditions and may vary depending on machine rigidity, insert, and operating parameters.

Delik tolerans değerleri ortalama çalışma koşulları esas alınarak belirlenmiş olup, makine kapasitesi ve kullanılan kesici elmas özelliklerine göre farklılık gösterebilir

Size Designation	Master Insert*	Spare Parts		
		Screw	Torx Key	Screw Torque Value
				N·m
D13 - D15	SPGT 050204 PM/EM	SSV M2x4-9521	STK-T06-9906	0,4
D15.5 - D21	SPGT 060204 PM/EM	SSV M2.2x5-9503		0,65
D22 - D27	SPGT 07T308 PM/EM	SSV M2.5x7-9506	STK-T08-9908	1,0
D28 - D30	SPGT 090408 PM/EM	SSV M3.5x8-9510	STK-T15-9910	2,7

*Suitable Insert brand is ZCC-CT

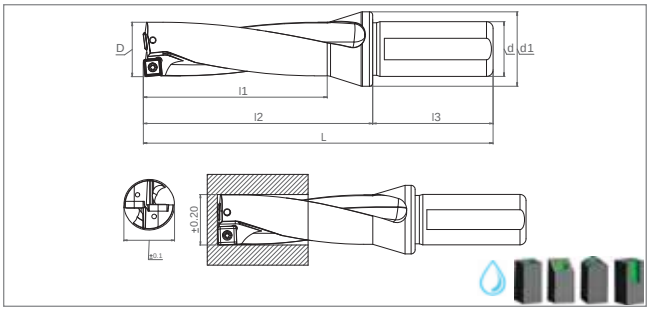

Ordering Code	Item Designation	Dimensions (mm)								Master Insert*
	SDUM Dx5 - SPGT 050204 / 060204 / 07T308 / 090408 U-DRILL	POWER SERIES	*D*	*d*	*d1*	*L*	*l1*	*l2*	*l3*	
SM41325	SDUM 14XD5 SPGT 050204	✓	14	20	25	135	70	85	50	SPGT 050204 PM/EM
SM41332	SDUM 15XD5 SPGT 050204	✓	15	20	25	140	75	90	50	
SM41349	SDUM 16XD5 SPGT 060204	✓	16	25	34	155	80	100	55	SPGT 060204 PM/EM
SM41356	SDUM 17XD5 SPGT 060204	✓	17	25	34	160	85	105	55	
SM41363	SDUM 18XD5 SPGT 060204	✓	18	25	34	165	90	110	55	
SM41370	SDUM 19XD5 SPGT 060204	✓	19	25	34	170	95	115	55	
SM41387	SDUM 20XD5 SPGT 060204	✓	20	25	34	175	100	120	55	
SM41394	SDUM 21XD5 SPGT 060204	✓	21	25	34	180	105	125	55	
SM41400	SDUM 22XD5 SPGT 07T308	✓	22	25	34	185	110	130	55	SPGT 07T308 PM/EM
SM41417	SDUM 23XD5 SPGT 07T308	✓	23	25	34	190	115	135	55	
SM41424	SDUM 24XD5 SPGT 07T308	✓	24	25	34	195	120	140	55	
SM41431	SDUM 25XD5 SPGT 07T308	✓	25	25	34	200	125	145	55	
SM41448	SDUM 26XD5 SPGT 07T308	✓	26	25	34	205	130	150	55	
SM41455	SDUM 27XD5 SPGT 07T308	✓	27	25	34	210	135	155	55	
SM41462	SDUM 28XD5 SPGT 090408	✓	28	25	34	215	140	160	55	SPGT 090408 PM/EM
SM41479	SDUM 29XD5 SPGT 090408	✓	29	25	34	220	145	165	55	
SM41486	SDUM 30XD5 SPGT 090408	✓	30	32	44	231	150	171	60	

Hole tolerance is given for average conditions and may vary depending on machine rigidity, insert, and operating parameters.

Delik tolerans değerleri ortalama çalışma koşulları esas alınarak belirlenmiş olup, makine kapasitesi ve kullanılan kesici elmas özelliklerine göre farklılık gösterebilir

Size Designation	Master Insert*	Spare Parts		
		Screw	Torx Key	Screw Torque Value N·m
D13 - D15	SPGT 050204 PM/EM	SSV M2x4-9521	STK-T06-9906	0,4
D15.5 - D21	SPGT 060204 PM/EM	SSV M2.2x5-9503		0,65
D22 - D27	SPGT 07T308 PM/EM	SSV M2.5x7-9506	STK-T08-9908	1,0
D28 - D30	SPGT 090408 PM/EM	SSV M3.5x8-9510	STK-T15-9910	2,7

*Suitable Insert brand is ZCC-CT

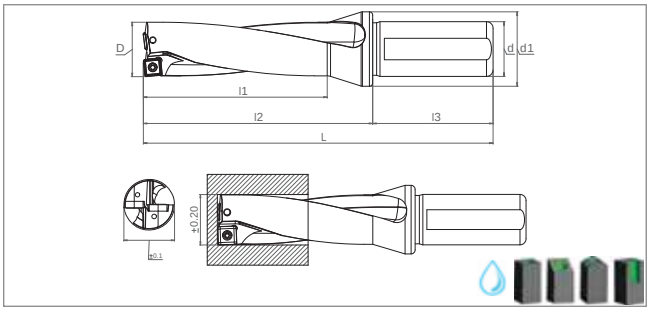

Ordering Code	Item Designation	Dimensions (mm)								Master Insert*
	SDUM Dx3 - SOMX / SOMT 050204 / 060304 / 070305 / 09T306 / 120408 U-DRILL	POWER SERIES	*D*	*d*	*d1*	*L*	*l1*	*l2*	*l3*	
SM41493	SDUM 14XD3 SO..050204	✓	14	20	25	110	42	60	50	SOMX 050204
SM41509	SDUM 15XD3 SO..050204	✓	15	20	25	113	45	63	50	
SM41516	SDUM 16XD3 SO..050204	✓	16	25	34	124	48	69	55	
SM41523	SDUM 17XD3 SO..050204	✓	17	25	34	127	51	72	55	
SM41530	SDUM 18XD3 SO..060304	✓	18	25	34	131	54	76	55	SOMX 060304
SM41547	SDUM 19XD3 SO..060304	✓	19	25	34	134	57	79	55	
SM41554	SDUM 20XD3 SO..060304	✓	20	25	34	139	60	84	55	
SM41561	SDUM 21XD3 SO..070305	✓	21	25	34	142	63	87	55	SOMX 070305
SM41578	SDUM 22XD3 SO..070305	✓	22	25	34	145	66	90	55	
SM41585	SDUM 23XD3 SO..070305	✓	23	25	34	150	69	95	55	
SM41592	SDUM 24XD3 SO..070305	✓	24	25	34	154	72	99	55	
SM41608	SDUM 25XD3 SO..09T306	✓	25	25	34	158	75	103	55	SOMT 09T306
SM41615	SDUM 26XD3 SO..09T306	✓	26	25	34	161	78	106	55	
SM41622	SDUM 27XD3 SO..09T306	✓	27	25	34	164	81	109	55	
SM41639	SDUM 28XD3 SO..09T306	✓	28	25	34	168	84	113	55	
SM41646	SDUM 29XD3 SO..09T306	✓	29	25	34	171	87	116	55	
SM41653	SDUM 30XD3 SO..09T306	✓	30	32	44	171	90	111	60	
SM41660	SDUM 31XD3 SO..09T306	✓	31	32	44	175	93	115	60	
SM41677	SDUM 32XD3 SO..09T306	✓	32	32	44	178	96	118	60	
SM41684	SDUM 33XD3 SO..09T306	✓	33	32	44	182	99	122	60	
SM41691	SDUM 34XD3 SO..09T306	✓	34	32	44	185	102	125	60	
SM41707	SDUM 35XD3 SO..120408	✓	35	32	44	189	105	129	60	SOMT 120408
SM41714	SDUM 36XD3 SO..120408	✓	36	32	44	193	108	133	60	
SM41721	SDUM 37XD3 SO..120408	✓	37	32	44	197	111	137	60	
SM41738	SDUM 38XD3 SO..120408	✓	38	32	44	201	114	141	60	
SM41745	SDUM 39XD3 SO..120408	✓	39	32	44	204	117	144	60	
SM50457	SDUM 40XD3 SO..120408	✓	40	32	44	208	120	148	60	

Hole tolerance is given for average conditions and may vary depending on machine rigidity, insert, and operating parameters.

Delik tolerans değerleri ortalama çalışma koşulları esas alınarak belirlenmiş olup, makine kapasitesi ve kullanılan kesici elmas özelliklerine göre farklılık gösterebilir

Size Designation	Master Insert*	Spare Parts		
		Screw	Torx Key	Screw Torque Value N·m
D14 - D17	SOMX 050204	SSV M2x4-9521	STK-T06-9906	0,4
D18 - D20	SOMX 060304	SSV M2.2x5-9503		0,65
D21 - D24	SOMX 070305	SSV M2.5x7-9506	STK-T08-9908	1,0
D25 - D34	SOMT 09T306	SSV M3x7-9527		1,9
D35 - D40	SOMT 120408	SSV M4x10-9514	STK-T15-9910	3,9

*Suitable Insert brand is ISC

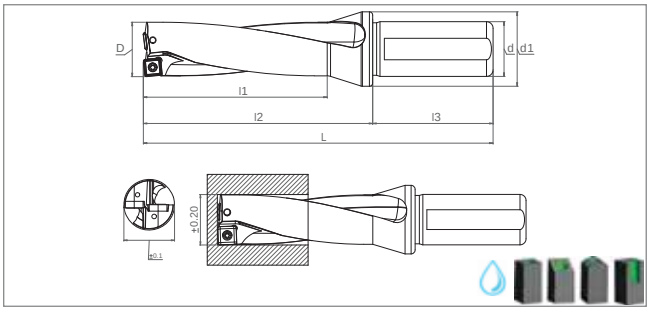

Ordering Code	Item Designation	Dimensions (mm)								Master Insert*
	SDUM Dx4 - SOMX / SOMT 050204 / 060304 / 070305 / 09T306 / 120408 U-DRILL	POWER SERIES	*D*	*d*	*d1*	*L*	*l1*	*l2*	*l3*	
SM41769	SDUM 14XD4 SO..050204	✓	14	20	25	124	56	74	50	SOMX 050204
SM41776	SDUM 15XD4 SO..050204	✓	15	20	25	128	60	78	50	
SM41783	SDUM 16XD4 SO..050204	✓	16	25	34	140	64	85	55	
SM41790	SDUM 17XD4 SO..050204	✓	17	25	34	144	68	89	55	
SM41806	SDUM 18XD4 SO..060304	✓	18	25	34	149	72	94	55	SOMX 060304
SM41813	SDUM 19XD4 SO..060304	✓	19	25	34	153	76	98	55	
SM41820	SDUM 20XD4 SO..060304	✓	20	25	34	159	80	104	55	
SM41837	SDUM 21XD4 SO..070305	✓	21	25	34	163	84	108	55	SOMX 070305
SM41844	SDUM 22XD4 SO..070305	✓	22	25	34	167	88	112	55	
SM41851	SDUM 23XD4 SO..070305	✓	23	25	34	173	92	118	55	
SM41868	SDUM 24XD4 SO..070305	✓	24	25	34	178	96	123	55	
SM41875	SDUM 25XD4 SO..09T306	✓	25	25	34	183	100	128	55	SOMT 09T306
SM41882	SDUM 26XD4 SO..09T306	✓	26	25	34	187	104	132	55	
SM41899	SDUM 27XD4 SO..09T306	✓	27	25	34	191	108	136	55	
SM41905	SDUM 28XD4 SO..09T306	✓	28	25	34	196	112	141	55	
SM41912	SDUM 29XD4 SO..09T306	✓	29	25	34	200	116	145	55	
SM41929	SDUM 30XD4 SO..09T306	✓	30	32	44	201	120	141	60	
SM41936	SDUM 31XD4 SO..09T306	✓	31	32	44	206	124	146	60	
SM41943	SDUM 32XD4 SO..09T306	✓	32	32	44	210	128	150	60	
SM41950	SDUM 33XD4 SO..09T306	✓	33	32	44	215	132	155	60	
SM41967	SDUM 34XD4 SO..09T306	✓	34	32	44	219	136	159	60	
SM41974	SDUM 35XD4 SO..120408	✓	35	32	44	224	140	164	60	SOMT 120408
SM41981	SDUM 36XD4 SO..120408	✓	36	32	44	229	144	169	60	
SM41998	SDUM 37XD4 SO..120408	✓	37	32	44	234	148	174	60	
SM42001	SDUM 38XD4 SO..120408	✓	38	32	44	239	152	179	60	
SM42018	SDUM 39XD4 SO..120408	✓	39	32	44	243	156	183	60	
SM42025	SDUM 40XD4 SO..120408	✓	40	32	44	248	160	188	60	

Hole tolerance is given for average conditions and may vary depending on machine rigidity, insert, and operating parameters.

Delik tolerans değerleri ortalama çalışma koşulları esas alınarak belirlenmiş olup, makine kapasitesi ve kullanılan kesici elmas özelliklerine göre farklılık gösterebilir

Size Designation	Master Insert*	Spare Parts		
		Screw	Torx Key	Screw Torque Value N·m
D14 - D17	SOMX 050204	SSV M2x4-9521	STK-T06-9906	0,4
D18 - D20	SOMX 060304	SSV M2.2x5-9503		0,65
D21 - D24	SOMX 070305	SSV M2.5x7-9506	STK-T08-9908	1,0
D25 - D34	SOMT 09T306	SSV M3x7-9527		1,9
D35 - D40	SOMT 120408	SSV M4x10-9514	STK-T15-9910	3,9

*Suitable Insert brand is ISC

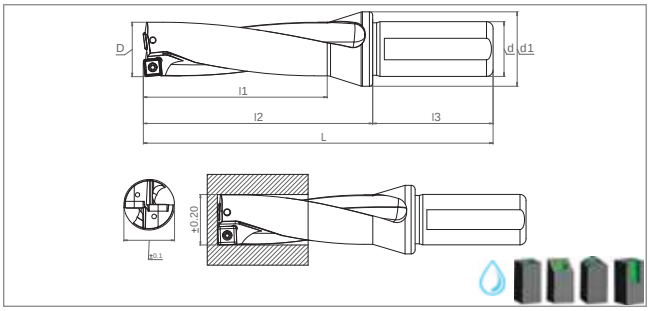

Ordering Code	Item Designation	Dimensions (mm)								Master Insert*
	SDUM Dx5 - SOMX / SOMT 050204 / 060304 / 070305 / 09T306 U-DRILL	POWER SERIES	*D*	*d*	*d1*	*L*	*l1*	*l2*	*l3*	
SM48782	SDUM 14XD5 SO..050204	✓	14	20	25	135	70	85	50	SOMX 050204
SM48799	SDUM 15XD5 SO..050204	✓	15	20	25	140	75	90	50	
SM48805	SDUM 16XD5 SO..050204	✓	16	25	34	155	80	100	55	
SM48812	SDUM 17XD5 SO..050204	✓	17	25	34	160	85	105	55	
SM48829	SDUM 18XD5 SO..060304	✓	18	25	34	165	90	110	55	SOMX 060304
SM48836	SDUM 19XD5 SO..060304	✓	19	25	34	170	95	115	55	
SM48843	SDUM 20XD5 SO..060304	✓	20	25	34	175	100	120	55	
SM48850	SDUM 21XD5 SO..070305	✓	21	25	34	180	105	125	55	SOMX 070305
SM48867	SDUM 22XD5 SO..070305	✓	22	25	34	185	110	130	55	
SM48874	SDUM 23XD5 SO..070305	✓	23	25	34	190	115	135	55	
SM48881	SDUM 24XD5 SO..070305	✓	24	25	34	195	120	140	55	
SM48898	SDUM 25XD5 SO..09T306	✓	25	25	34	200	125	145	55	SOMT 09T306
SM48904	SDUM 26XD5 SO..09T306	✓	26	25	34	205	130	150	55	
SM48911	SDUM 27XD5 SO..09T306	✓	27	25	34	210	135	155	55	
SM48928	SDUM 28XD5 SO..09T306	✓	28	25	34	215	140	160	55	
SM48935	SDUM 29XD5 SO..09T306	✓	29	25	34	220	145	165	55	
SM48942	SDUM 30XD5 SO..09T306	✓	30	32	44	231	150	171	60	

Hole tolerance is given for average conditions and may vary depending on machine rigidity, insert, and operating parameters.

Delik tolerans değerleri ortalama çalışma koşulları esas alınarak belirlenmiş olup, makine kapasitesi ve kullanılan kesici elmas özelliklerine göre farklılık gösterebilir

Size Designation	Master Insert*	Spare Parts		
		Screw	Torx Key	Screw Torque Value N·m
D14 - D17	SOMX 050204	SSV M2x4-9521	STK-T06-9906	0,4
D18 - D20	SOMX 060304	SSV M2.2x5-9503		0,65
D21 - D24	SOMX 070305	SSV M2.5x7-9506	STK-T08-9908	1,0
D25 - D30	SOMT 09T306	SSV M3x7-9527		1,9

*Suitable Insert brand is ISC

MULTI CUT POWER SERIES

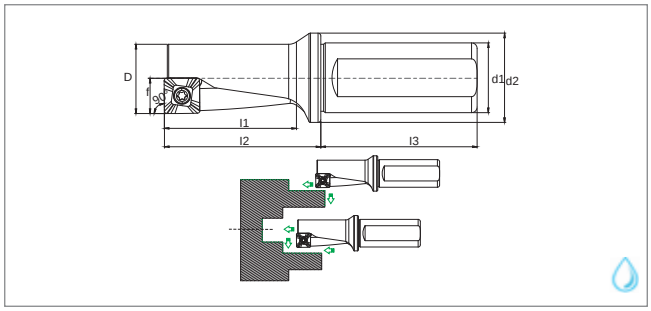

Ordering Code		Item Designation	Dimensions (mm)								Master Insert*
Direction		SMCR/L XCMT 0502.. / 0602.. / 0803.. / 10T3.. / 1304.. / 1705.. MULTI CUT	POWER SERIES	D	d1	d2	l1	l2	l3	F	
Right	Left										
SM33313	SM55025	SMCR/L 10x2.5 XC05	✓	10	12	16	25	32	42	5	XC.. 0502..
SM33337	SM55032	SMCR/L 12x2.5 XC06	✓	12	16	20	30	40	45	6	XC.. 0602..
SM33344	SM55049	SMCR/L 16x2.5 XC08	✓	16	20	25	40	53	50	8	XC.. 0803..
SM33399	SM55056	SMCR/L 20x2.5 XC10	✓	20	25	34	50	66	55	10	XC.. 10T3..
SM33405	SM55063	SMCR/L 25x2.5 XC13	✓	25	25	34	62.5	80	55	12.5	XC.. 1304..
SM33757	SM55070	SMCR/L 32x2.5 XC17	✓	32	32	44	80	95	60	16	XC.. 1705..

Size Designation	Master Insert*	Spare Parts		
		Screw	Torx Key	Screw Torque Value N·m
D10	XC.. 0502..	SSV M2x4-9521	STK-T06-9906	0,4
D12	XC.. 0602..	SSV M2.2x5-9503		0,65
D16	XC.. 0803..	SSV M3x6-9507	STK-T08-9908	1,9
D20	XC.. 10T3..	SSV M3.5x8-SC-9513	STK-T10-9909	2,7
D25	XC.. 1304..	SSV M4.5x11-9518	STK-T20-9911	4,7
D32	XC.. 1705..			

*Suitable Insert brand is TGTC

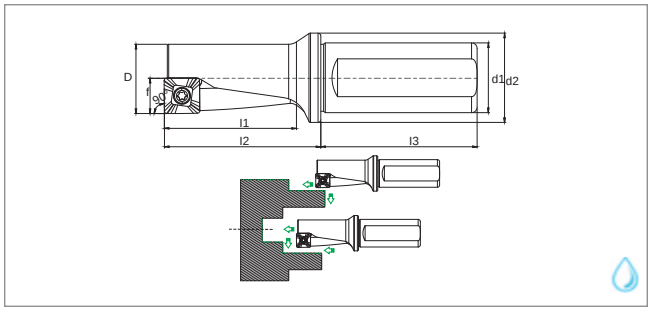

Ordering Code		Item Designation	Dimensions (mm)								Master Insert*
Direction		SMCR/L QCMT 0502../0602../0703../0803.. 10T3../1304../1705.. MULTI CUT	POWER SERIES	D	d1	d2	l1	l2	l3	F	
Right	Left										
SM72237	SM72244	SMCR/L 10x2.5 QC0502	✓	10	12	16	25	32	42	5	QCMT 050204
SM72251	SM72268	SMCR/L 12x2.5 QC0602	✓	12	16	20	30	40	45	6	QCMT 060204
SM72275	SM72282	SMCR/L 14x2.5 QC0703	✓	14	16	20	35	45	45	7	QCMT 070304
SM72299	SM72305	SMCR/L 16x2.5 QC0803	✓	16	20	25	40	53	50	8	QCMT 080304
SM72312	SM72329	SMCR/L 20x2.5 QC10T3	✓	20	25	34	50	66	55	10	QCMT 10T304
SM72336	SM72343	SMCR/L 25x2.5 QC1304	✓	25	25	34	62.5	80	55	12.5	QCMT 130408
SM72350	SM72367	SMCR/L 32x2.5 QC1705	✓	32	32	44	80	95	60	16	QCMT 170508

Size Designation	Master Insert*	Spare Parts		
		Screw	Torx Key	Screw Torque Value N·m
D10	QCMT 050204	SSV M2x4-9521	STK-T06-9906	0,4
D12	QCMT 060204	SSV M2.2x5-9503		0,65
D14	QCMT 070304	SSV M2.5x6-9505	STK-T08-9908	1,0
D16	QCMT 080304	SSV M3x6-9507	STK-T08-9908	1,9
D20	QCMT 10T304	SSV M3.5x8-9510	STK-T15-9910	2,7
D25	QCMT 130408	SSV M4.5x11-9518	STK-T20-9911	4,7
D32	QCMT 170508			

*Suitable Insert brand is KRLY

MULTI CUT POWER SERIES

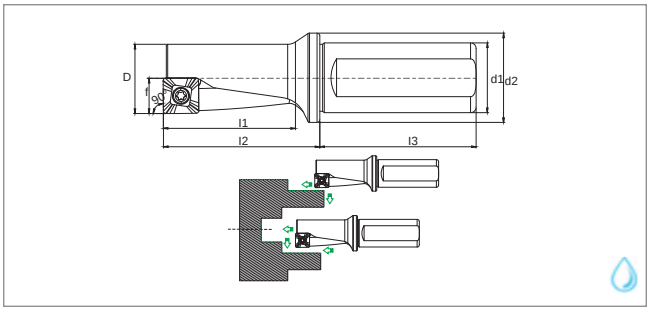

Ordering Code		Item Designation	Dimensions (mm)								Master Insert*
Direction		SMCR/L XCMT 0401../0502../0602../0703../0803../09T3. 10T3../1304../1705.. MULTI CUT	POWER SERIES	D	d1	d2	l1	l2	l3	F	
Right	Left										
SM72374	SM72381	SMCR/L 08x2.5 XCMT0401	✓	8	10	12	20	25	38	4	XCMT 040104
SM72398	SM72404	SMCR/L 10x2.5 XCMT0502	✓	10	12	16	25	32	42	5	XCMT 050204
SM72411	SM72428	SMCR/L 12x2.5 XCMT0602	✓	12	16	20	30	40	45	6	XCMT 060204
SM72435	SM72442	SMCR/L 14x2.5 XCMT0703	✓	14	16	20	35	45	45	7	XCMT 070304
SM72459	SM72466	SMCR/L 16x2.5 XCMT0803	✓	16	20	25	40	53	50	8	XCMT 080304
SM72473	SM72480	SMCR/L 18x2.5 XCMT09T3	✓	18	25	32	45	55	55	9	XCMT 09T304
SM72497	SM72503	SMCR/L 20x2.5 XCMT10T3	✓	20	25	34	50	66	55	10	XCMT 10T304
SM72510	SM72527	SMCR/L 25x2.5 XCMT1304	✓	25	25	34	62.5	80	55	12.5	XCMT 130404
SM72534	SM72541	SMCR/L 32x2.5 XCMT1705	✓	32	32	44	80	95	60	16	XCMT 170508

Size Designation	Master Insert*	Spare Parts		
		Screw	Torx Key	Screw Torque Value N·m
D08	XCMT 040104	SSV M1.8x4-9501	STK-T06-9906	0,4
D10	XCMT 050204	SSV M2x4-9521		
D12	XCMT 060204	SSV M2.2x5-9503		0,65
D14	XCMT 070304	SSV M2.5x6-9505	STK-T08-9908	1,0
D16	XCMT 080304	SSV M3x6-9507	STK-T08-9908	1,9
D18	XCMT 09T304			
D20	XCMT 10T304	SSV M3.5x8-9510	STK-T15-9910	2,7
D25	XCMT 130404	SSV M4.5x11-9518	STK-T20-9911	4,7
D32	XCMT 170508			

*Suitable Insert brand is ISC

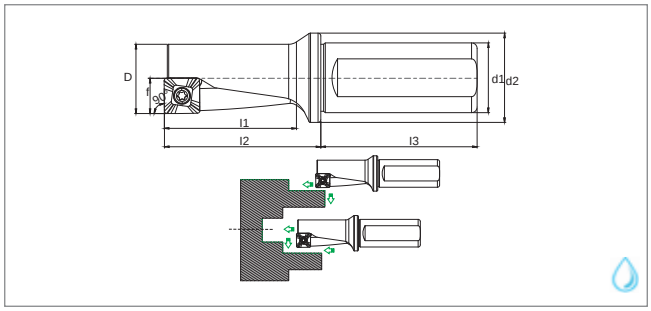

Ordering Code		Item Designation	Dimensions (mm)								Master Insert*
Direction		SMCR/L XCNT / XCET 0401../0502../0602../0703../0803../09T3. 10T3../1304../1705.. MULTI CUT	POWER SERIES	D	d1	d2	l1	l2	l3	F	
Right	Left										
SM72558	SM72565	SMCR/L 08x2.5 XC.T0401	✓	8	10	12	20	25	38	4	XC.T 040104
SM72572	SM72589	SMCR/L 10x2.5 XC.T0502	✓	10	12	16	25	32	42	5	XC.T 050204
SM72596	SM72602	SMCR/L 12x2.5 XC.T0602	✓	12	16	20	30	40	45	6	XC.T 060204
SM72619	SM72626	SMCR/L 14x2.5 XC.T0703	✓	14	16	20	35	45	45	7	XC.T 070304
SM72633	SM72640	SMCR/L 16x2.5 XC.T0803	✓	16	20	25	40	53	50	8	XC.T 080304
SM72657	SM72664	SMCR/L 18x2.5 XC.T09T3	✓	18	25	32	45	55	55	9	XC.T 09T304
SM72671	SM72688	SMCR/L 20x2.5 XC.T10T3	✓	20	25	34	50	66	55	10	XC.T 10T304
SM72695	SM72701	SMCR/L 25x2.5 XC.T1304	✓	25	25	34	62.5	80	55	12.5	XC.T 130404
SM72718	SM72725	SMCR/L 32x2.5 XC.T1705	✓	32	32	44	80	95	60	16	XC.T 170508

Size Designation	Master Insert*	Spare Parts		
		Screw	Torx Key	Screw Torque Value N·m
D08	XCMT 040104	SSV M1.8x4-9501	STK-T06-9906	0,4
D10	XCMT 050204	SSV M2x4-9521		
D12	XCMT 060204	SSV M2.2x5-9503		0,65
D14	XCMT 070304	SSV M2.5x6-9505	STK-T08-9908	1,0
D16	XCMT 080304	SSV M3x6-9507	STK-T08-9908	1,9
D18	XCMT 09T304			
D20	XCMT 10T304	SSV M3.5x8-9510	STK-T15-9910	2,7
D25	XCMT 130404	SSV M4.5x11-9518	STK-T20-9911	4,7
D32	XCMT 170508			

*Suitable Insert brand is CRTZT

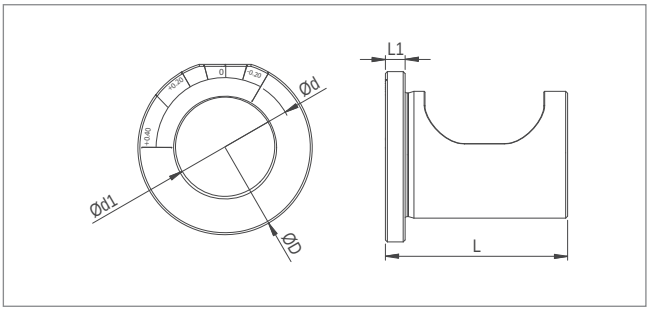

Ordering Code	Item Designation	Dimensions (mm)						
SEA ECCENTRIC SLEEVE		*D*	*d*	*d1*	*L*	*L1*	*DAR*	*CHAR*
SM69343	SEA 20-25	39	25	20	44	5	+0.4 ~-0.2	+0.2 ~-0.15
SM69350	SEA 25-32	44	32	25	46	5	+0.4 ~-0.2	+0.2 ~-0.15
SM69367	SEA 32-40	59	40	32	55	5	+0.4 ~-0.2	+0.2 ~-0.15

Eccenter Sleeve User Manuel / Eksantrik Kovan Kullanım Klavuzu

Lathe / Torna

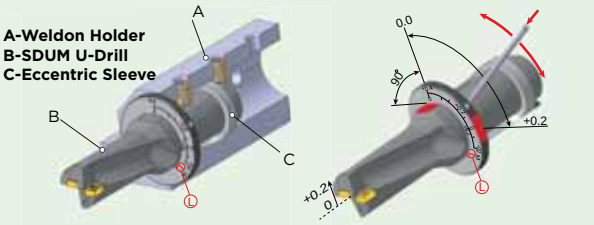

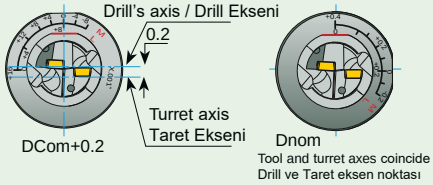

In lathe operations, the drill axis can be brought into alignment with the spindle axis by means of an eccentric sleeve. The alignment range is 0.2 mm; turning the sleeve counterclockwise raises the drill position.
Tornada, eksantrik kovan matkabın eksenini, iş milinin ekseniyle çakışacak şekilde kaydırabilir. Eksantrik kovan, matkabın ekseninin iş mili ekseniyle 0,2 mm aralığında hizalanmasını sağlar (yükseltmek için kovanı saat yönünün tersine çevirin).

Mills / Freze

In milling operations, the nominal drill diameter can be modified by shifting the drill axis relative to the tool spindle.
Freze tezgâhında, matkabın nominal çapı, matkabın ekseninin takım milinden kaydırılmasıyla değiştirilebilir.

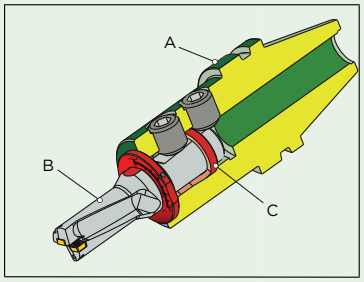

A-Weldon Holder
B-SDUM U-Drill
C-Eccentric Sleeve

Radial adjustment pin (not supplied)
Radyal ayar pimi (ürünle birlikte verilmez)

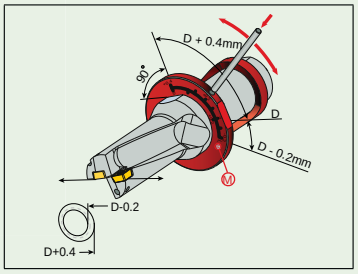

To enlarge the diameter, turn the sleeve clockwise
Çapı büyütmek için Eksantrik Adaptörü saat yönünde çevirin.

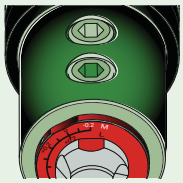

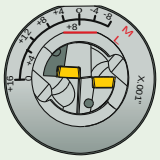

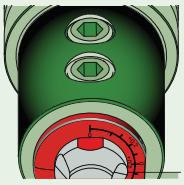

Hole Diameter
Delik Çapı 23.8mm

Drill Diameter
Delme Çapı 24mm

Hole Diameter
Delik Çapı 24mm

Drill Diameter
Delme Çapı 24mm

Hole Diameter
Delik Çapı 24.4mm

Drill Diameter
Delme Çapı 24mm

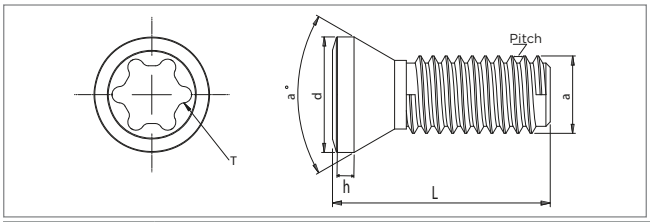

Stock Code	Item Designation	Dimensions (mm)							
	SSV METRIC TORX SCREWS	*a (Metric)*	*Pitch*	*Drive Size T*	*L*	*h*	*d*	*a°*	N.m
SM74958	SSV M1.6X3.20-9546	1.6	0.35	T06	3.65		2.5	60	0,4
SM74736	SSV M1.8X3.65-9545	1.8	0.35	T06	3.67		2.5	55	0,4
SM39216	SSV M1.8x4-9501	1.8	0.35	T06	3.95		2.4	55	0,4
SM52345	SSV M2x4-9521	2	0.4	T06	3.9		2.82	60	0,4
SM22119	SSV M2x5-9502	2	0.4	T06	4.85		2.80	60	0,4
SM21426	SSV M2.2x5-9503	2.2	0.45	T06	5		2.82	50	0,65
SM63792	SSV M2.5x5-T06-9540	2.5	0.45	T06	4.75		3.25	55	1,0
SM49536	SSV M2.5x5-9504	2.5	0.45	T08	4.80		3.5	55	1,0
SM39568	SSV M2.5x6-9505	2.5	0.45	T08	5.9		3.5	55	1,0
SM78154	SSV M2.5x6.5-9534	2.5	0.45	T08	6.4		3.5	55	1,0
SM21402	SSV M2.5x7-9506	2.5	0.45	T08	6.96		3.5	55	1,0
SM63761	SSV M2.5x7-39011-9537	2.5	0.45	T08	7.15	1.75	3.46	60	1,0
SM63891	SSV M2.5x6-39011-9541	2.5	0.45	T08	5.77	1.75	3.5	60	1,0
SM49673	SSV M3x6-9507	3	0.5	T08	5.97		4	50	1,9
SM78147	SSV M3x5 LG-9525	3	0.5	T08	4,98		3.88	60	1,9
SM39889	SSV M3x6.5 LG-9509	3	0.5	T08	6.45		3.88	60	1,9
SM52376	SSV M3x7-9527	3	0.5	T08	6.86		4	60	1,9
SM21464	SSV M3x8-9508	3	0.5	T08	7.88		4	60	1,9
SM27350	SSV M3.5x8-9510	3.5	0.6	T15	7.9		5.3	60	2,7
SM27367	SSV M3.5x8-SC-9513	3.5	0.6	T10	8.5		4.80	60	2,7
SM21433	SSV M3.5x10-9511	3.5	0.6	T15	10		5.3	60	2,7
SM58163	SSV M3.5x11-9532	3.5	0.6	T15	10.80		5.4	60	2,7
SM65048	SSV M3.5x9-SC-9544	3.5	0.6	T10	9		4.80	60	2,7
SM53465	SSV M3.5x12-SC-9531	3.5	0.6	T10	11.60		4.88	60	2,7
SM00180	SSV M3.5x12-9526	3.5	0.6	T15	11.80		5.27	60	2,7
SM21440	SSV M3.5x14-9512	3.5	0.6	T15	14		5.30	60	2,7
SM64157	SSV M4x9-9542	4	0.7	T15	8.80		5.7	60	3,9
SM29897	SSV M4x10-9514	4	0.7	T15	9.92		5.7	60	3,9
SM00470	SSV M4x9x5-9528	4	0.7	T15	8.80		5.55	60	3,9
SM21471	SSV M4x12-9515	4	0.7	T15	11.90		5.73	60	3,9
SM00487	SSV M4x12x5-9529	4	0.7	T15	11.68		5.5	60	3,9
SM29934	SSV M4x12x6-9517	4	0.7	T15	13.07		6.63	45	3,9
SM40083	SSV M4x14-9516	4	0.7	T15	13.80		5.7	60	3,9
SM21457	SSV M4.5x11-9518	4.5	0.75	T20	10.9		6.52	60	4,7
SM39193	SSV M5x13-9519	5	0.8	T20	13		7	60	5,5
SM00494	SSV M5x18-9530	5	0.8	T20	18.25		7.80	60	5,5
SM39186	SSV M6X16-9520	6	1.0	T20	15.8	-	8.50	60	8,0

Stock Code	*CLAMPS*	Item Designation
SM21259	TSK1-9101	T System Turning Tools
SM21297	TSK2-9102	T System Turning Tools
SM21310	TSK3-9103	T System Turning Tools
SM21327	TSK4-9104	T System Turning Tools
SM21358	TSK5-9105	T System Turning Tools
SM49611	TSK6-9106	T System Turning Tools
SM01712	TSK7-9125	T System Turning Tools
SM21266	MSK1-9107	M System Turning Tools
SM21334	MSK2-9108	M System Turning Tools
SM21303	MSK3-9109	M System Turning Tools
SM21341	MSK4-9110	M System Turning Tools
SM26667	CSK/R-9112	C System Turning Tools
SM26674	CSK/L-9113	C System Turning Tools
SM29866	CSK1/R-9111	C System Turning Tools
SM21280	CSK1/L-9119	C System Turning Tools
SM21273	CSK2/R-9113	C System Turning Tools
SM49604	CSK2/L-9112	C System Turning Tools
SM00159	CSK3/R-9117	C System Turning Tools
SM00142	CSK3/L-9118	C System Turning Tools
SM52154	CSK4-9114	C System Turning Tools
SM52161	CSK5-9115	C System Turning Tools
SM27206	RDTP-9124	RDMT/RDKW Milling Tools
SM30008	TKBP-9116	OFER / TPKN / SNGN / SPKN Millng Tools
SM68360	CCK 0106-9129	RCGX 0606.. Turning Tools
SM68377	CCK 0209-9130	RCGX 0904.. Turning Tools
SM68384	CCK 0312-9131	RCGX 1204.. Turning Tools

Stock Code	*LEVERS*	Item Designation
SM21372	SPL1-9120	WNMG08 / CNMG12 / SNMG12 Inserts
SM21389	SPL2-9121	CNMG16 / SNMG15 Inserts
SM27268	SPL3-9122	CNMG19 / SNMG19 Inserts
SM00173	SPL4-9123	DNMG 1506.. Inserts

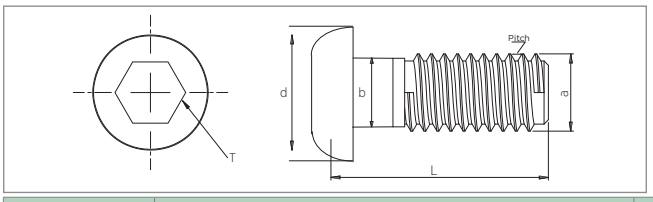

Stock Code	Item Designation	Dimensions (mm)					
	CLAMP SCREWS	*a (Metric)*	*Pitch*	*T Drive Size*	*d*	*b*	*L*
SM52192	TSBV M5x16-9222	5	0.8	AA3	9	5.43	16.15
SM49574	TSBV M5x18-9201	5	0.8	AA3	9	5.43	18.19
SM21617	TSBV M5x23-9202	5	0.8	AA3	10.85	5.35	24
SM63532	TSBV M6x23-9248	6	1.0	AA3	11.26	8.15	25
SM00661	TSBV M6x26-9203	6	1.0	AA3	13.80	8.15	27
SM21624	TSBV M6x28-9205	6	1.0	AA3	13.80	8.15	30
SM21631	TSBV M6x28x7-9206	6	1.0	AA3	13.50	7.00	30
SM21679	TSBV M8x30-9207	8	1.25	AA4	13.80	8.15	30
SM77287	BKTV M3x19-9548	3	0.5	?	?	?	?
SM52208	BKTV M4x15-9210	4	0.7	AA3	6.55	3.90	15
SM72183	BKTV M4x15x6-9252	4	0.7	AA3	6	3.90	15
SM52215	BKTV M5x17-9211	5	0.8	AA4	8.50	4.90	17
SM52222	BKTV M5x18x8-9212	5	0.8	AA4	8	4.80	18
SM77270	BKTV M5x21-9547	5	0.8	?	?	?	21
SM52239	BKTV M6x20x8-9213	6	1.0	AA4	8.50	5.85	20
SM52246	BKTV M6x21-9214	6	1.0	AA5	9.90	5.90	22
SM21648	BKTV M6x25-9215	6	1.0	AA4	9.90	5.80	25
SM59573	BKTV M6x25-9233	6	1.0	AA5	9.90	5.80	26
SM60753	BKTV M6x28-9240	6	1.0	AA5	9.90	5.80	30
SM60760	BKTV M6x35-9241	6	1.0	AA5	9.90	5.80	35
SM52253	BKTV M8x30x11-9217	8	1.25	AA5	11.85	7.90	30
SM59566	BKTV M8x1x25-9232	8	1.0	AA4	11.50	7.90	25
SM26742	BKTV M8x28-9216	8	1.25	AA6	12.90	7.90	28
SM00197	CSBV M6x20-9209	6	1.0	AA4	11.80	5.90	20
SM26759	CSBV1 M6x25-9223	6	1.0	AA5	9.90	5.90	26
SM29941	CSBV M8x29x11-9208	8	1.25	AA4	11	7.80	29
SM04377	TKSV M8x1x18-9227	8	1.0	AA4	-	-	18

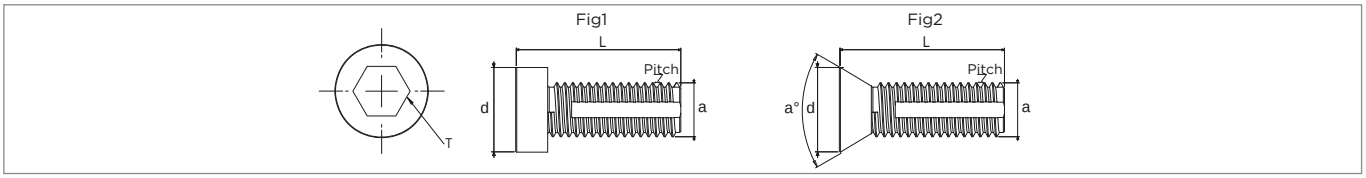

Stock Code	Item Designation		Dimensions (mm)							
	MOUNTING SCREWS WITH COOLANT HOLE FACEMILLS	💧	*Mill Dia.*	*a (Metric)*	*Pitch*	*T Drive Size*	*d*	*L*	*a°*	*Fig.*
SM60692	STV-C M8x1390-9234	✓	D40	8	1.25	AA5	13	30	90	1
SM61125	STV M8x1390-9242	-	D40	8	1.25	AA5	13	30	90	1
SM60708	STV-C M8x1160-9235	✓	D40*	8	1.25	AA5	11,50	39	60	2
SM61132	STV M8x1160-9243	-	D40*	8	1.25	AA5	11,50	39	60	2
SM60715	STV-C M10x1690-9236	✓	D50** D63**	10	1.50	AA6	16	44	60	2
SM61149	STV M10x1690-9244	-	D50** D63**	10	1.50	AA6	16	35	60	2
SM60722	STV-C M10x1660-9237	✓	D50 D63	10	1.50	AA7	16	30	90	1
SM61156	STV M10x1660-9245	-	D50 D63	10	1.50	AA7	16	30	90	1
SM72176	STV-C M10x1330-9251	✓	D50	10	1.50	AA7	13	30	90	1
SM72169	STV M10x1330-9250	-	D50	10	1.50	AA7	13	30	90	1
SM60739	STV-C M12x1890-9238	✓	D80	12	1.75	AA8	18	42	90	1
SM61163	STV M12x1890-9246	-	D80	12	1.75	AA8	18	42	90	1
SM60746	STV-C M16x2390-9239	✓	D100	16	2.00	AA14	23	54	90	1
SM61170	STV M16x2390-9247	-	D100	16	2.00	AA14	23	54	90	1

* Diameter Ø40 for "BLMP 1105..-3PKT 1505..- WOEJ 0905" inserts
**Diameter Ø50-63 for "SN.. 1206..(89°) - RNMU 1606.. -TOMT 1506..- SDMT 1506" inserts

INSERT SHIMS

Item	Order Code	Item Designation	Suitable Insert
	SM21921	BAX DN11-9601	DNMG 11 SHIM
	SM21792	BAX DN15-9602	DNMG 15 SHIM
	SM21877	BAX CN12-9603	CNMG 12 SHIM
	SM21907	BAX CN16-9604	CNMG 16 SHIM
	SM21914	BAX CN19-9605	CNMG 19 SHIM
	SM40014	BAX WN06-9606	WNMG 06 SHIM
	SM21891	BAX WN08-9607	WNMG 08 SHIM
	SM21822	BAX SN12-9608	SNMG 12 SHIM
	SM21976	BAX SN15-9609	SNMG 15 SHIM
	SM39520	BAX SN19-9629	SNMG 19 SHIM
	SM21846	BAX TN16-9610	TNMG 16 SHIM
	SM21860	BAX TN22-9611	TNMG 22 SHIM
	SM21839	BAX VN16-9612	VNMG 16 SHIM
	SM21808	BAX DC11-9613	DCMT 11 SHIM
	SM21952	BAX SC12-9615	SCMT 12 SHIM
	SM27343	BAX CC09-9616	CCMT 09 SHIM
	SM21938	BAX CC12-9617	CCMT 12 SHIM
	SM21884	BAX VB16-9618	VBMT 16 SHIM
	SM21983	BAX TC16-9619	TCMT 16 SHIM
	SM29880	BAX VC16-9620	VCMT 16 SHIM
	SM21815	BAX KN16/R-9621	KNUX/R 16 SHIM
	SM21969	BAX KN16/L-9622	KNUX/L 16 SHIM
	SM21853	BAX ER/L16-9623	ER/L 16-R/L SHIM
	SM21990	BAX ER/L22-9624	ER/L 22-R/L SHIM
	SM52451	BAX IR/L16-9623	IR/L 16-R/L SHIM
	SM52468	BAX IR/L22-9624	IR/L 22-R/L SHIM
	SM39223	BAX TER16-9625	TER 16 SHIM
	SM52475	BAX TEL16-9626	TEL 16 SHIM
	SM39230	BAX TER 22-9627	TER 22 SHIM
	SM52482	BAX TEL 22-9628	TEL 22 SHIM
	SM01408	BAX TER-27-9630	TER 27 SHIM
	SM01415	BAX TEL-27-9631	TEL 27 SHIM
	SM68339	BAX RC06-9632	RCGX 0606 SHIM
	SM68346	BAX RC09-9633	RCGX 0904 SHIM
	SM68353	BAX RC09-9634	RCGX 1207 SHIM

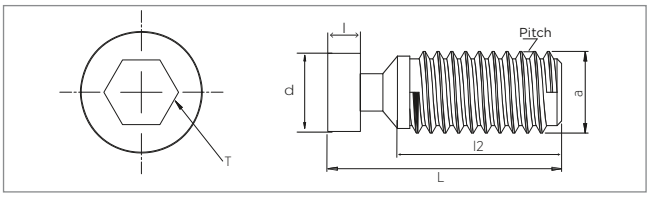

Stock Code	Item Designation	Dimensions (mm)						
	LEVER SCREWS	*a (Metric)*	*Pitch*	*T Drive Size*	*d*	*L*	*l*	*l2*
SM22157	SLV1 M8x20-9224	8	1.25	AA3	7.90	20	6	10.50
SM22164	SLV2 M8x24-9225	8	1.25	AA3	7.90	24	6	15
SM22171	SLV3 M10x29-9226	10	1.50	AA4	9.90	29	6.80	18
SM53120	SLV4 M8x21-9229	8	1.25	AA3	7.90	21	4.50	12
SM58156	SLV5 M8x19-9231	8	1.25	AA3	7.90	19	4.30	12
SM76037	SLV7 M8x17-9253	8	1.25	AA3	7.90	17	4.50	12
SM64430	SLV6 M8X18-9249	8	1.25	AA3	7.90	18	4.30	12

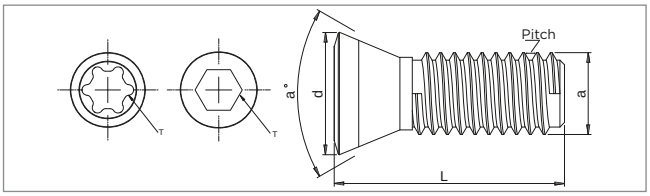

Stock Code	Item Designation	Dimensions (mm)						
	BALL NOSE SCREWS	*a (Metric)*	*Pitch*	*Drive Size*	*d*	*b*	*L*	*a°*
SM21532	TC170 M3x0.5x7-9801	3	0.5	T08	4.20	2.90	7	50
SM21556	TC172 M4x0.5x8-9802	4	0.5	T15	6	3.95	8	60
SM21563	TC174 M5x0.5x9-9803	5	0.5	T20	7	4.95	9	80
SM21570	TC176 M5x0.5x13-9804	5	0.5	T20	7.40	4.95	13.50	45
SM21587	TC178 M5x0.5x17-9805	5	0.5	T20	7.90	4.95	17.50	45
SM21549	TC181 M6x0.75x22-9806	6	0.75	AA3	9.50	5.95	22.50	60
SM21594	TC184 M8x0.75x28-9807	8	0.75	AA4	11.70	7.95	28	60

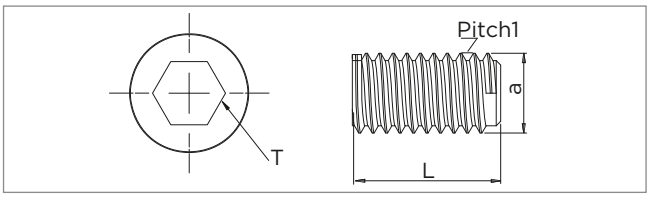

Stock Code	Item Designation	Dimensions (mm)			
	ADJUSTMENT SCREWS	*a (Metric)*	*Pitch*	*Drive Size*	*L*
SM52260	SNSV M3x6-9301	3	0.5	AA1.5	6
SM52277	SNSV M4x8-9302	4	0.6	AA2	8
SM52284	SNSV M4x10-9303	4	0.6	AA2	10
SM52291	SNSV M4x12-9304	4	0.6	AA2	12
SM52307	SNSV M4x16-9305	4	0.6	AA2	16
SM62498	SNSV M5x8-9306	5	0.6	AA2.5	8
SM52314	SNSV M5x15-9307	5	0.6	AA2.5	15
SM52321	SNSV M5x20-9318	5	0.6	AA2.5	20
SM52338	SNSV M6x10-9308	6	1.0	AA3	10
SM78840	SNSV M3x4-9323	3	0.5	AA1.5	4
SM78857	SNSV M4x4-9324	4	0.7	AA2	4

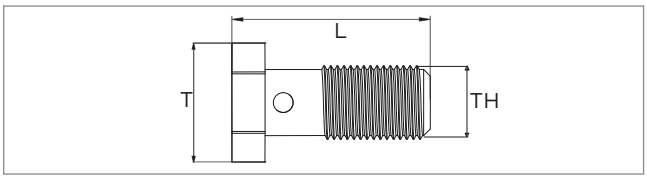

COOLING ACCESSORY CONNECTION SCREW

Stock Code	Item Designation	L	TH	T
SM60623	SMAB G1/8	27	G1/8”	14
SM60630	SMAB M10x1	27	M10	14

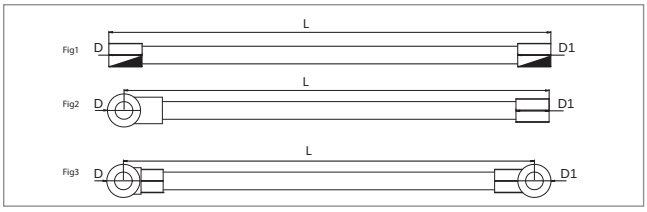

COOLING ACCESSORY HOSE

Stock Code	Item Designation	L	D	D1	Fig.	Max. Bar
SM60357	SMDD G1/8-G1/8	250	G1/8”	G1/8”	1	50
SM60364	SMDY G1/8-G1/8	250	G1/8”	G1/8”	2	50
SM60371	SMYY G1/8-G1/8	250	G1/8”	G1/8”	3	50

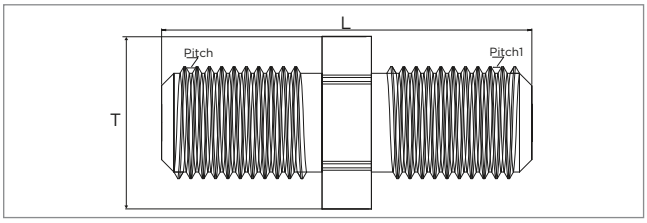

COOLING ACCESSORY FASTENER

Stock Code	Item Designation	L	Pitch	Pitch1	T
SM60388	SMRK G1/8-G1/8	26,5	G1/8”	G1/8”	14
SM60395	SMRK1 G1/8-M10x1	26,5	G1/8”	M10x1	14

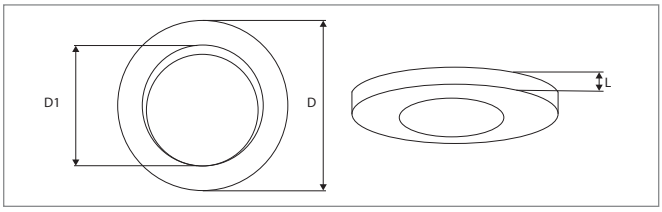

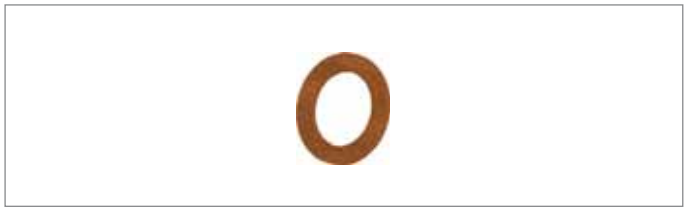

COOLING ACCESSORY COOPER GASKET

Stock Code	Item Designation	D	D1	L
SM60654	SMBC 1/8	14	10	1.5

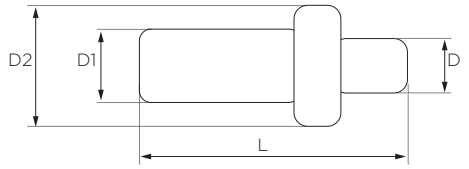

Stock Code	Item Designation	Dimensions (mm)			
	SHIM PINS	*D*	*D1*	*D2*	*L*
SM21228	BMP1 3.70x5x17-9309	3.70	5	6	17
SM21235	BMP2 5x6x16-9310	5	6	7	16
SM59580	BMP4 3.70x5x12-9322	3.70	5	6	12
SM49567	BMP5 3.70x5x13-9312	3.70	5	6	13
SM49598	BMP6 5x6x14-9316	5	6	7	14
SM58460	BMP7 3.70x5x11-9317	3.70	5	6	11
SM58477	BMP8-3.70x5x14-9318	3.70	5	6	14

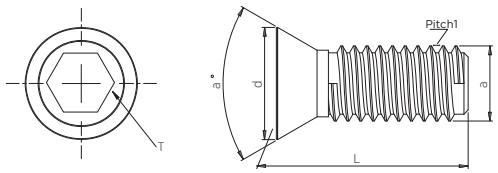

Stock Code	Item Designation	Dimensions (mm)					
	SHIM SCREWS	*a (Metric)*	*Pitch*	*Drive Size*	*d*	*L*	*a°*
SM22003	TSAV M4x10-9403	4	0.7	AA3	7.50	10	30
SM64621	TSAV M4x8x6-9415	4	0.7	AA3	7.50	10	30
SM39575	TSAV M4x10x6-9402	4	0.7	AA2.5	6	10	30
SM58149	TSAV M4x10x7-9413	4	0.7	AA2.5	7	10	30
SM52383	TSAV M6x14x9-9404	6	1.0	AA4	9	16	30
SM52390	TSAV M6x16x10-9405	6	1.0	AA4	10	16	30
SM52406	TSAV M6x16x11-9406	6	1.0	AA4	11	16	30
SM22027	CSAV M3x10-9401	3	0.5	AA2	5.50	10	30

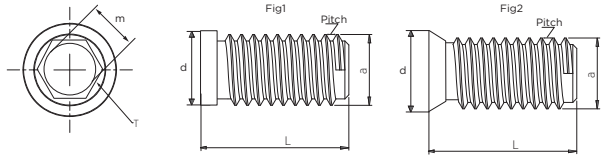

Stock Code	Item Designation	Dimensions (mm)						
	SHIM SCREWS	*m (Metric)*	*a*	*Pitch*	*d*	*L*	*Drive Size*	*Fig.*
SM22034	SBV M5.05 A3.5x11-9407	4	5	0.5	5.85	11	AA3.5	1
SM52413	SBV1 M6x0.75 A4x13-9409	4	6	0.75	7.50	12	AA4.5	2
SM22041	SBV2 M6x0.75 A4.5x13-9410	4	6	0.75	7.50	13	AA4.5	1
SM52437	SBV3 M6x0.75 A4x10-9412	6	6	0.75	7.50	10	AA4.5	1
SM52420	SBV4 M6x0.75 A4x9-9411	6	6	0.75	7.50	9	AA4.5	2
SM49543	SBV5 M5.05 A3.5x9-9408	6	5	0.5	5.85	9	AA3.5	1

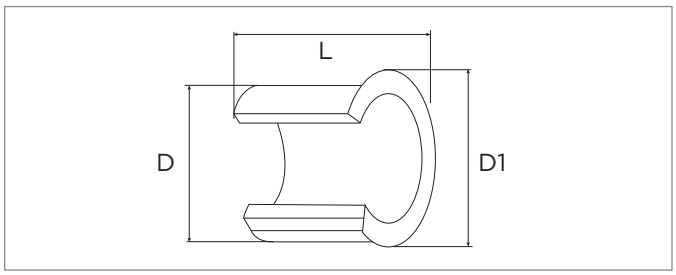

Stock Code	Item Designation	Dimensions (mm)		
	SHIM SPRINGS	*D*	*D1*	*L*
SM21525	SLAY1-9701	6.50	7.45	6.20
SM26740	SLAY2-9702	7.75	9	8.15
SM29927	SLAY3-9703	9.80	11.20	11.25

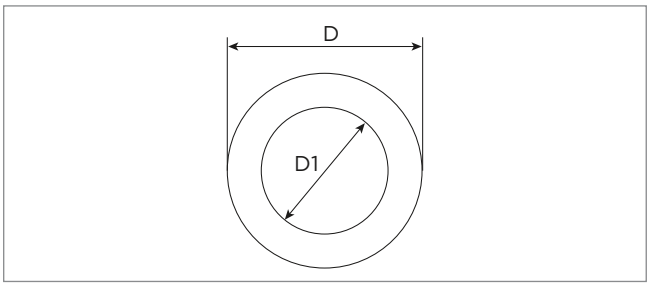

Stock Code	Item Designation	Dimensions (mm)	
	CLAMP SCREW SPRINGS	*D*	*D1*
SM21501	TSP 6.5x12-9705	12	6.50
SM73678	TSS3-9710		

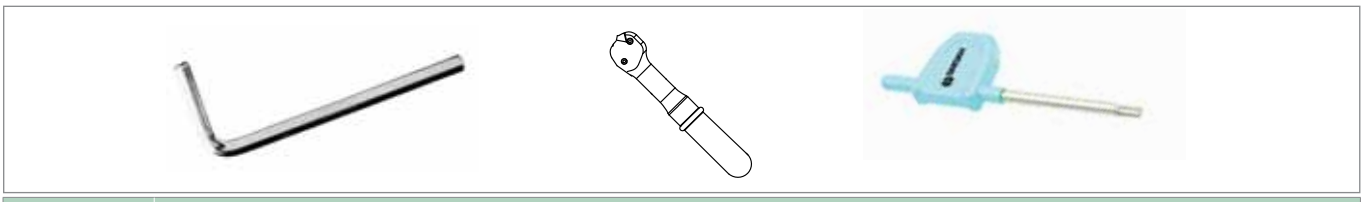

Stock Code	Item Designation
	TORX and ALLEN KEYS
SM21761	STK-T06-9906
SM21716	STK-T08-9908
SM00357	STK-T10-9909
SM27251	STK-T15-9910
SM21778	STK-T20-9911
SM62504	SAK-AA2.5-9912
SM21754	SAK-AA3-9902
SM21723	SAK-AA4-9903
SM21730	SAK-AA5-9904
SM21747	SAK-AA6-9905
SM78819	SAK-AA7-9914
SM76921	SDK-01-9913

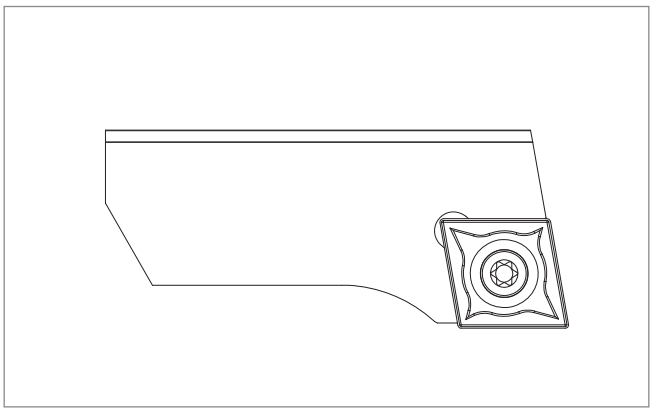

Stock Code	Item Designation
	Cartridge
SM16125	KR2024
SM16132	KR2429
SM16101	KR2939
SM16149	KR3949
SM16156	KR4960
SM16163	KR5979
SM16118	KR6989
SM16170	KR89130

NOTES

SMOXH®
CUTTING TOOLS

NOTES

SMOXH®
CUTTING TOOLS

THE RISING
POWER
OF QUALITY

SMOXH®
CUTTING TOOLS

Mustafa Şimsek Mak.Tak.San.Tic.Ltd.Şti.

Büyükkayacık 5.OSB. 502.Sk No:6
42250 - Selçuklu / KONYA /Türkiye

Customer Service: +90 332 **251 21 78**

www.smoxh.com.tr
info@smoxh.com.tr
export@smoxh.com.tr